FIBRE CHANNEL

Framing and Signaling - 6
(FC-FS-6)

Rev 0.5

INCITS working draft proposed
American National Standard
for Information Technology

May 18, 2022

Secretariat: Information Technology Industry Council

NOTE: This is a working draft American National Standard of Accredited Standards Committee INCITS. As such this is not a completed standard. The T11 Technical Committee may modify this document as a result of comments received anytime, or during a future public review and its eventual approval as a Standard. Use of the information contained herein is at your own risk.

Permission is granted to members of INCITS, its technical committees, and their associated task groups to reproduce this document for the purposes of INCITS standardization activities without further permission, provided this notice is included. All other rights are reserved. Any duplication of this document for commercial or for-profit use is strictly prohibited.

POINTS OF CONTACT:

Steven L. Wilson (T11 Chair)
Broadcom Limited
130 Holger Way
San Jose, CA 95134
Voice: 408-333-8128
steve.wilson@broadcom.com

Craig W. Carlson (T11 Vice Chair)
Marvell Semiconductor
12900 Whitewater Drive
Minnetonka, MN 55343
Voice: 952-852-0511
cwcarlson@marvell.com

Craig W. Carlson (T11.3 Chair)
Marvell Semiconductor
12900 Whitewater Drive
Minnetonka, MN 55343
Voice: 952-852-0511
cwcarlson@marvell.com

David Peterson (FC-FS-6 Chair)
Broadcom Limited
1230 Northland Dr
Mendota Heights, MN 55120
Voice: 763-248-9374
david.peterson@broadcom.com

Craig W. Carlson (FC-FS-6 Editor)
Marvell Semiconductor
12900 Whitewater Drive
Minnetonka, MN 55343
Voice: 952-852-0511
cwcarlson@marvell.com

Revision History

Rev 0.5 - May 18, 2022

a) Incorporated T11-2022-00099-v003.
b) Incorporated T11-2022-00100-v002.

Rev 0.4 - March 2, 2022

a) Incorporated T11-2021-00132-v000.
b) Incorporated T11-2021-00133-v000.
c) Incorporated T11-2021-00248-v001.
d) Incorporated T11-2021-00131-v003.
e) Incorporated T11-2021-00305-v002.
f) Incorporated T11-2021-00291-v000.
g) Incorporated T11-2021-00290-v000.
h) Incorporated T11-2022-00027-v001.
i) Incorporated T11-2021-00274-v000.
j) Incorporated T11-2022-00059-v001.

Rev 0.3 - February 25, 2021

a) Removed Annex J per October 2019 FC-FS-6 working group direction.
b) Incorporated T11-2020-00167-v000.
c) Incorporated T11-2020-00268-v000.
d) Incorporated T11-2020-00011-v005.
e) Incorporated T11-2020-00210-v003.
f) Incorporated T11-2021-00014-v001.

Rev 0.2 - January 31, 2020

a) Incorporated T11-2019-00071-v004.
b) Incorporated T11-2019-00215-v004.
c) Did not remove Annex J per October 2019 FC-FS-6 working group direction since this annex is referenced in T11-2019-00071-v004.

Rev 0.1 - January 11, 2019

a) Incorporated T11-2018-00047-v007.
b) Incorporated T11-2018-00266-v002.

draft proposed American National Standard
for Information Technology

Fibre Channel –
Fibre Channel Framing and Signaling - 5 (FC-FS-5)

Secretariat

Information Technology Industry Council

Approved dd mmmmm, 200x

American National Standards Institute, Inc.

Abstract

This standard describes the framing and signaling requirements for Fibre Channel links. The Physical Interface requirements are described in Fibre Channel-Physical Interfaces (FC-PI-x). The Link Services requirements are described in Fibre Channel-Link Services (FC-LS-4). This standard is recommended for new implementations but does not obsolete the existing Fibre Channel standards.

American National Standard

Approval of an American National Standard requires review by ANSI that the requirements for due process, consensus, and other criteria for approval have been met by the standards developer.

Consensus is established when, in the judgement of the ANSI Board of Standards Review, substantial agreement has been reached by directly and materially affected interests. Substantial agreement means much more than a simple majority, but not necessarily unanimity. Consensus requires that all views and objections be considered, and that a concerted effort be made towards their resolution.

The use of American National Standards is completely voluntary; their existence does not in any respect preclude anyone, whether he has approved the standards or not, from manufacturing, marketing, purchasing, or using products, processes, or procedures not conforming to the standards.

The American National Standards Institute does not develop standards and will in no circumstances give an interpretation of any American National Standard. Moreover, no person shall have the right or authority to issue an interpretation of an American National Standard in the name of the American National Standards Institute. Requests for interpretations should be addressed to the secretariat or sponsor whose name appears on the title page of this standard.

CAUTION NOTICE: This American National Standard may be revised or withdrawn at any time. The procedures of the American National Standards Institute require that action be taken periodically to reaffirm, revise, or withdraw this standard. Purchasers of American National Standards may receive current information on all standards by calling or writing the American National Standards Institute.

PATENT STATEMENT

The developers of this standard have requested that holders of patents that may be required for the implementation of the standard disclose such patents to the publisher. However, neither the developers nor the publisher have undertaken a patent search in order to identify which, if any, patents may apply to this standard. As of the date of publication of this standard, following calls for the identification of patents that may be required for the implementation of the standard, notice of one or more such claims has been received. By publication of this standard, no position is taken with respect to the validity of this claim or of any rights in connection therewith. The known patent holder(s) has (have), however, filed a statement of willingness to grant a license under these rights on reasonable and nondiscriminatory terms and conditions to applicants desiring to obtain such a license. Details may be obtained from the publisher. No further patent search is conducted by the developer or publisher in respect to any standard it processes. No representation is made or implied that this is the only license that may be required to avoid infringement in the use of this standard.

Published by

American National Standards Institute, Inc.
11 West 42nd Street, New York, NY 10036

Copyright © 2018 by Information Technology Industry Council (ITI)
All rights reserved.

No part of this publication may be reproduced in any form, in an electronic retrieval system or otherwise, without prior written permission of ITI, 1250 Eye Street NW, Washington, DC 20005.

Printed in the United States of America

Table of Contents

Contents

Contents	Page
1 Scope	**1**
2 References	**2**
2.1 Qualification and availability of references	2
2.2 Approved references	2
2.3 References under development	4
2.4 Other references	4
3 Definitions, abbreviations, conventions and keywords	**6**
3.1 Definitions	6
3.2 Editorial conventions	19
3.3 State machines	20
3.3.1 Overview	20
3.3.2 States	20
3.3.3 State variables	20
3.3.4 State timers	20
3.3.5 State transitions	21
3.3.6 State diagram conventions	21
3.4 Abbreviations, acronyms, and symbols	22
3.4.1 Acronyms and other abbreviations	22
3.4.2 Symbols	24
3.5 Keywords	25
4 Structure and concepts	**27**
4.1 Introduction	27
4.2 Functional levels	27
4.2.1 Overview	27
4.2.2 FC-0 general description	28
4.2.3 FC-1 general description	28
4.2.4 FC-2 general description	29
4.2.5 FC-3 general description	29
4.2.6 FC-4 general description	29
4.3 Architectural components of nodes	30
4.4 Physical model	31
4.5 Communication models	33
4.6 Topology	33
4.6.1 Types	33
4.6.2 Point-to-point topology	33
4.6.3 Fabric topology	34
4.6.4 Arbitrated Loop topology	35
4.7 Classes of service	36
4.7.1 General	36
4.7.2 Class 2 service - multiplex	36
4.7.3 Class 3 service - datagram	36
4.7.4 Class F service - Fabric	36
4.8 General Fabric model	36
4.8.1 General	36
4.8.2 Fabric Ports (Fx_Ports)	39
4.8.3 Frame delivery service	39
4.9 Generic Services	39
4.10 Building Blocks	39
4.10.1 Building block hierarchy	39

4.10.2 Frame - - - 40
4.10.3 Sequence - - - 41
4.10.3.1 Introduction - - - 41
4.10.3.2 Sequence_Identifier (SEQ_ID) - - - 41
4.10.3.3 Sequence Status Blocks - - - 41
4.10.4 Exchange - - - 41
4.10.4.1 Introduction - - - 41
4.10.4.2 Exchange_Identifiers (OX_ID and RX_ID) - - - 42
4.10.4.3 Exchange Status Blocks - - - 42
4.10.5 Protocols - - - 42
4.10.5.1 Primitive Sequence protocols - - - 42
4.10.5.2 Fabric Login protocol - - - 42
4.10.5.3 Additional N_Port_ID protocol - - - 43
4.10.5.4 N_Port Login protocol - - - 43
4.10.5.5 Data transfer protocol - - - 43
4.10.5.6 Nx_Port Logout protocol - - - 43
4.10.5.7 Fabric Logout protocol - - - 43
4.11 Segmentation and reassembly of application data - - - 43
4.12 Error detection and recovery - - - 43

5 FC-1 transmission codes - - - 45
5.1 Overview - - - 45
5.2 8B/10B transmission code - - - 45
5.2.1 Overview - - - 45
5.2.2 Notation conventions - - - 46
5.2.3 Valid 8B/10B Transmission Characters - - - 47
5.2.4 Running disparity - - - 52
5.2.5 Generating Transmission Characters - - - 53
5.2.6 Validity of received Transmission Characters - - - 53
5.2.7 8B/10B Ordered Sets - - - 54
5.2.7.1 General - - - 54
5.2.7.2 8B/10B Frame delimiters - - - 55
5.2.7.3 8B/10B Primitive Signals - - - 57
5.2.7.4 Idle - - - 58
5.2.7.5 8B/10B Primitive Sequences - - - 58
5.3 64B/66B transmission code - - - 59
5.3.1 Overview - - - 59
5.3.2 64B/66B Transmission Word format - - - 60
5.3.3 64B/66B scrambling - - - 61
5.3.4 Invalid Synchronization Header - - - 62
5.3.5 Data Transmission Words - - - 62
5.3.6 Control Transmission Words - - - 62
5.3.6.1 Idle or LPI followed by Idle or LPI - - - 65
5.3.6.2 Idle followed by SOF - - - 65
5.3.6.3 EOF followed by Idle or LPI - - - 66
5.3.6.4 Idle / other Special Function - - - 67
5.3.6.5 Other Special Function / Idle - - - 68
5.3.6.6 Other Special Function / other Special Function - - - 70
5.3.6.7 Other Special Function / SOF - - - 70
5.3.6.8 SOF / data - - - 71
5.3.6.9 Data / EOF - - - 72
5.3.6.10 Receiver error reporting - - - 73
5.3.7 64B/66B representation of Special Functions - - - 74
5.3.7.1 64B/66B frame delimiters - - - 74

5.3.7.2 64B/66B Primitive Signals - - - 75
5.3.7.3 64B/66B Primitive Sequences - - - 76
5.4 32GFC 256B/257B transmission code - - - 77
5.4.1 Overview - - - 77
5.4.2 64B/66B to 256B/257B Transcoding - - - 77
5.4.3 Reed-Solomon encoder - - - 80
5.4.4 Scrambler - - - 80
5.4.5 Descrambler - - - 81
5.4.6 Reed-Solomon decoder - - - 81
5.4.7 32GFC 256B/257B to 64B/66B transcoder - - - 81
5.4.8 Transmit Bit Ordering - - - 82
5.4.9 Receive Bit Ordering - - - 83
5.5 64GFC 256B/257B transmission code - - - 85
5.5.1 Overview - - - 85
5.5.2 64B/66B to 64GFC 256B/257B transcoding - - - 85
5.5.3 Alignment marker mapping and insertion - - - 85
5.5.4 Reed-Solomon encoder - - - 86
5.5.5 Gray mapping - - - 86
5.5.6 Precoding - - - 86
5.5.7 Inverse precoding - - - 86
5.5.8 Inverse Gray mapping - - - 87
5.5.9 Alignment lock - - - 87
5.5.10 Reed-Solomon decoder - - - 87
5.5.10.1 Overview - - - 87
5.5.10.2 Link Degrade Signaling - - - 87
5.5.11 Alignment marker removal - - - 88
5.5.12 256B/257B to 64B/66B transcoder - - - 88
5.5.13 Transmit Bit Ordering - - - 89
5.5.14 Receive Bit Ordering - - - 90
5.6 Transmitter Training Signal for LSN and 16GFC/32GFC Transmitter Training - - - 90
5.6.1 Overview - - - 90
5.6.2 Training Frame - - - 92
5.6.3 Training Pattern - - - 97
5.7 Transmitter Training Signal for 64GFC Transmitter Training - - - 97
5.7.1 Overview - - - 97
5.7.2 Training Frame - - - 97
5.7.3 Training Pattern - - - 99
5.8 FEC for 128GFC - - - 99
5.8.1 Overview - - - 99
5.8.2 Functional block diagram - - - 100
5.8.2.1 64B/66B to 256B/257B Transcoder - - - 100
5.8.2.2 Alignment marker mapping and insertion - - - 101
5.8.2.3 Reed-Solomon encoder - - - 101
5.8.2.4 Symbol distribution - - - 101
5.8.2.5 Transmit bit ordering - - - 101
5.8.2.6 Alignment lock and deskew - - - 102
5.8.2.7 Lane reorder - - - 102
5.8.2.8 Reed-Solomon decoder - - - 102
5.8.2.9 Alignment marker removal - - - 102
5.8.2.10 256B/257B to 64B/66B transcoder - - - 102
5.8.2.11 Receive bit ordering - - - 102
5.9 FEC for 256GFC - - - 105
5.9.1 Overview - - - 105
5.9.2 Functional block diagram - - - 105

5.9.2.1 Overview ----------105
5.9.2.2 64B/66B to 256B/257B Transcoder ----------105
5.9.2.3 Alignment marker mapping and insertion ----------106
5.9.2.4 Reed-Solomon encoder ----------106
5.9.2.5 Symbol distribution ----------106
5.9.2.6 Gray mapping ----------107
5.9.2.7 Precoding ----------107
5.9.2.8 Transmit bit ordering ----------107
5.9.2.9 Inverse precoding ----------109
5.9.2.10 Inverse Gray mapping ----------109
5.9.2.11 Alignment lock and deskew ----------109
5.9.2.12 Lane reorder ----------109
5.9.2.13 Reed-Solomon decoder ----------109
5.9.2.14 Alignment marker removal ----------109
5.9.2.15 256B/257B to 64B/66B transcoder ----------109
5.9.2.16 Receive bit ordering ----------110
5.10 Single lane 128GFC 256B/257B transmission code ----------112
5.10.1 Overview ----------112
5.10.2 Alignment marker mapping and insertion ----------112
5.10.2.1 Overview ----------112
5.10.2.2 Single Reed-Solomon Symbol Forwarding or Interleaved Reed-Solomon Symbol Forwarding 112
5.10.2.3 Single Reed-Solomon Bit Interleaving ----------113
5.10.2.4 Interleaved Reed-Solomon Bit Interleaving ----------114
5.10.3 Interleaved Reed-Solomon encoder ----------115
5.10.4 Single Reed-Solomon encoder ----------115
5.10.5 Symbol Forwarding ----------115
5.10.5.1 Interleaved Reed-Solomon Symbol Forwarding ----------115
5.10.5.2 Single Reed-Solomon Symbol Forwarding ----------116
5.10.6 Bit Interleaving ----------116
5.10.6.1 Interleaved Reed-Solomon Bit Interleaving ----------116
5.10.6.2 Single Reed-Solomon Bit Interleaving ----------116
5.10.7 Alignment lock ----------116
5.10.8 Symbol De-Interleaving ----------117
5.10.8.1 Interleaved Reed-Solomon Symbol De-interleaving ----------117
5.10.8.2 Single Reed-Solomon Symbol De-interleaving ----------117
5.10.9 Bit De-Interleaving ----------117
5.10.9.1 Interleaved Reed-Solomon Bit De-interleaving ----------117
5.10.9.2 Single Reed-Solomon Bit De-interleaving ----------117
5.10.10 Interleaved Reed-Solomon decoder ----------118
5.10.10.1 Link Degrade Signaling ----------118
5.10.11 Single Reed-Solomon decoder ----------118
5.10.11.1 Overview ----------118
5.10.11.2 Link Degrade Signaling ----------118
5.10.12 Interleaved Reed-Solomon Transmit Bit Ordering ----------118
5.10.13 Interleaved Reed-Solomon Receive Bit Ordering ----------120
5.10.14 Single Reed-Solomon Transmit Bit Ordering ----------122
5.10.15 Single Reed-Solomon Receive Bit Ordering ----------124

6 FC-1 Transmission Word Synchronization ----------125
6.1 Scope ----------125
6.2 Introduction ----------125
6.3 8B/10B Transmission Word Synchronization ----------125
6.3.1 State Diagram Overview ----------125

6.3.2 Operational and not operational conditions - - - 127
6.3.3 Transmission Word Synchronization Procedure - - - 128
6.3.3.1 Bit Synchronization - - - 128
6.3.3.2 Transmission Word Synchronization detection - - - 128
6.3.3.2.1 Introduction - - - 128
6.3.3.2.2 Achieving Transmission Word Synchronization - - - 128
6.3.3.2.3 8B/10B Transmission Word Synchronization for speed negotiation - - - 128
6.3.3.2.4 Transmission Word alignment methods - - - 129
6.3.3.2.4.1 Continuous-mode alignment - - - 129
6.3.3.2.4.2 Explicit-mode alignment - - - 129
6.3.4 Loss of Transmission Word Synchronization - - - 129
6.3.4.1 Introduction - - - 129
6.3.4.2 Detection of an invalid Transmission Word - - - 129
6.3.5 State transitions - - - 129
6.3.5.1 Default State - - - 129
6.3.5.2 Loss of Synchronization state - - - 130
6.3.5.3 Word Synchronization Acquired states - - - 130
6.3.5.3.1 Loss-of-Synchronization procedure - - - 130
6.3.5.3.2 No Invalid Transmission Word Detected state - - - 130
6.3.5.3.3 First Invalid Transmission Word Detected state - - - 131
6.3.5.3.4 Second Invalid Transmission Word Detected state - - - 131
6.3.5.3.5 Third Invalid Transmission Word Detection state - - - 131
6.3.5.4 Reset state - - - 131
6.4 64B/66B Transmission Word Synchronization - - - 132
6.4.1 Overview - - - 132
6.4.2 64B/66B Transmission Word Synchronization for speed negotiation - - - 132
6.4.3 Detection of an invalid 64B/66B Transmission Word - - - 132
6.5 Transmitter Training Signal Transmission Word Synchronization - - - 133
6.5.1 Introduction - - - 133
6.5.2 Transmitter Training Transmission Word Synchronization for speed negotiation - - - 134
6.6 256B/257B Transmission Word Synchronization - - - 134
6.6.1 Overview - - - 134
6.6.2 RS-FEC rapid code Word Synchronization process - - - 134

7 FC_Port state machine - - - 136
7.1 Scope - - - 136
7.2 Introduction - - - 136
7.3 Normal operation states - - - 137
7.4 Active State (AC) - - - 139
7.5 Link Recovery - - - 140
7.5.1 Link Recovery hierarchy - - - 140
7.5.2 LR Transmit State (LR1) - - - 140
7.5.3 LR Receive State (LR2) - - - 140
7.5.4 LRR Receive State (LR3) - - - 140
7.6 Link Failure - - - 141
7.6.1 NOS Receive State (LF1) - - - 141
7.6.2 NOS Transmit State (LF2) - - - 141
7.7 Offline - - - 141
7.7.1 General - - - 141
7.7.2 OLS Transmit State (OL1) - - - 141
7.7.3 OLS Receive State (OL2) - - - 142
7.7.4 Wait for OLS State (OL3) - - - 142
7.8 Primitive Sequence Protocols - - - 142
7.8.1 Functions - - - 142

7.8.2 Link Initialization Protocol ----------142
7.8.3 Link Reset Protocol ----------142
7.8.4 Link Failure Protocol ----------143
7.8.5 Online-to-offline Protocol ----------143

8 Link speed negotiation ----------144
8.1 Scope ----------144
8.2 Speed negotiation overview ----------144
8.3 Link physical architecture and requirements ----------144
8.4 Speed negotiation requirements on L_Ports ----------146
8.5 Primitives ----------146
8.5.1 Overview ----------146
8.5.2 32GFC speed negotiation ----------147
8.5.3 64GFC speed negotiation ----------147
8.5.4 128GFC and 256GFC speed negotiation ----------148
8.5.5 Single lane 128GFC speed negotiation ----------149
8.6 Speed negotiation algorithm ----------149
8.6.1 Algorithm overview ----------149
8.6.2 Speed Negotiation stage specification conventions ----------151
8.6.2.1 Diagramming conventions ----------151
8.6.2.2 Terminology ----------153
8.6.3 Stage 1 - Wait_for_signal ----------155
8.6.4 Stage 2 - Negotiate_master and Watchdog timer ----------156
8.6.5 Stage 3 - Negotiate_follow ----------159
8.6.6 Optional Stage 5 - Slow_wait ----------160
8.6.7 Timing requirements ----------162
8.6.7.1 Overview ----------162
8.6.7.2 Timing requirements for Optical Module for speed changes during LSN ----------164

9 Transmitter training ----------166
9.1 Scope ----------166
9.2 Transmitter training ----------166
9.2.1 Overview ----------166
9.2.2 Transmitter training for 128GFC/32GFC/16GFC ----------166
9.2.3 Transmitter training state machines for 128/32/16GFC ----------167
9.2.3.1 Overview ----------167
9.2.3.2 Timers ----------169
9.2.3.3 Variables ----------169
9.2.3.4 Training_Sequencer state machine ----------170
9.2.3.4.1 Overview ----------170
9.2.3.4.2 States ----------171
9.2.3.4.2.1 Train_Init ----------171
9.2.3.4.2.2 Train_Lock ----------173
9.2.3.4.2.3 Train_Local ----------173
9.2.3.4.2.4 Train_Remote ----------173
9.2.3.4.2.5 Link_Ready ----------174
9.2.3.5 Cn_Controller state machines ----------175
9.2.3.5.1 Overview ----------175
9.2.3.5.2 States ----------176
9.2.3.5.2.1 Tx_Ready ----------176
9.2.3.5.2.2 Command ----------176
9.2.3.5.2.3 Clear ----------177
9.2.3.5.2.4 GlobalCommand ----------177
9.2.3.5.2.5 GlobalClear ----------178
9.2.3.6 Cn_Responder state machines ----------178

9.2.3.6.1 Overview ---178
9.2.3.6.2 States ---179
9.2.3.6.2.1 Rx_Ready ---179
9.2.3.6.2.2 Update ---180
9.2.3.6.2.3 Acknowledge ---181
9.2.3.7 Link_Qual_Check state machine ---------------------------------182
9.2.3.7.1 Overview ---182
9.2.3.7.2 States ---182
9.2.3.7.2.1 Link_Test --182
9.2.4 Transmitter training for 256GFC/64GFC -------------------------------183
9.2.4.1 Overview ---183
9.2.4.2 256G-64GFC_Training_Sequencer state machine -------------------184
9.3 Link Speed Negotiation/Transmitter Training flow diagram for 64GFC ---------185

10 Energy Efficient Fibre Channel ---190
10.1 Overview ---190
10.2 Energy Efficient Negotiation --190
10.3 Energy Efficient Fibre Channel and FEC -----------------------------------190
10.4 Alert Signal --191
10.5 Transmitter Turn Off ---191
10.6 LPI Mode ---191
10.6.1 Overview --191
10.6.2 LPI Mode Entry ---191
10.6.3 LPI Mode Timing Parameters --192
10.6.4 Energy Efficient Fibre Channel State Diagrams --------------------------193
10.6.4.1 Energy Efficient State Variables --------------------------------------193
10.6.4.2 LPI Mode Transmitter State Diagram -----------------------------------194
10.6.4.3 LPI Mode Receiver State Diagram ------------------------------------195

11 Frame Transmission and Reception -------------------------------------198
11.1 Scope ---198
11.2 General frame format --198
11.3 Frame transmission and reception ---198
11.3.1 Overview ---198
11.3.2 Fill Words --198
11.3.3 Frame Transmission --199
11.3.4 Frame byte order --199
11.3.5 Emission Lowering Protocol ---201
11.3.6 Frame Scrambling --201
11.3.7 Start-of-Frame (SOF) delimiter --202
11.3.7.1 Introduction ---202
11.3.7.2 SOF Initiate (SOF_{ix}) --202
11.3.7.2.1 Applicability ---202
11.3.7.2.2 SOF Initiate Class 2 (SOF_{i2}) ---------------------------------202
11.3.7.2.3 SOF Initiate Class 3 (SOF_{i3}) ---------------------------------202
11.3.7.3 SOF Normal (SOF_{nx}) ---202
11.3.7.3.1 Applicability ---202
11.3.7.3.2 SOF Normal Class 2 (SOF_{n2}) ----------------------------------203
11.3.7.3.3 SOF Normal Class 3 (SOF_{n3}) ----------------------------------203
11.3.7.4 SOF Fabric (SOF_f) ---203
11.3.8 End-of-Frame (EOF) delimiter ---203
11.3.8.1 Introduction ---203
11.3.8.2 Valid frame content ---204
11.3.8.2.1 EOF Normal (EOF_n) ---204
11.3.8.2.2 EOF Terminate (EOF_t) --204

11.3.8.3 Invalid frame content ----------204
11.3.8.3.1 General ----------204
11.3.8.3.2 EOF Abort (EOFa) ----------204
11.3.8.3.3 EOF Invalid (EOFni) ----------204
11.3.9 Frame reception ----------205
11.3.9.1 Rules ----------205
11.3.9.2 Frame validity ----------205
11.3.9.3 Invalid frame processing ----------205
11.4 Frame Content ----------206
11.4.1 Scope ----------206
11.4.2 Extended_Headers ----------206
11.4.3 Frame_Header ----------206
11.4.4 Data_Field ----------206
11.4.5 CRC ----------206

12 Frame_Header ----------210
12.1 Scope ----------210
12.2 Introduction ----------210
12.3 Routing Control (R_CTL) ----------210
12.3.1 Introduction ----------210
12.3.2 ROUTING Field ----------211
12.3.3 INFORMATION Field ----------211
12.4 Address identifiers (D_ID, S_ID) ----------213
12.4.1 General ----------213
12.4.2 Reserved address identifiers ----------214
12.4.3 Destination_ID (D_ID) ----------214
12.4.4 Source_ID (S_ID) ----------214
12.5 Class Specific Control (CS_CTL)/Priority ----------215
12.5.1 Introduction ----------215
12.5.1.1 CS_CTL ----------215
12.5.2 Priority ----------216
12.6 Data structure type (TYPE) ----------216
12.7 Frame Control (F_CTL) ----------219
12.7.1 Introduction ----------219
12.7.2 Exchange Context ----------221
12.7.3 Sequence Context ----------221
12.7.4 First_Sequence ----------222
12.7.5 Last_Sequence ----------222
12.7.6 End_Sequence ----------222
12.7.7 CS_CTL/Priority Enable ----------222
12.7.8 Sequence Initiative ----------222
12.7.9 ACK_Form ----------223
12.7.10 Abort Sequence Condition ----------223
12.7.11 Relative offset present ----------224
12.7.12 Exchange reassembly ----------224
12.7.13 Fill Bytes ----------224
12.7.14 F_CTL bits on Data frames ----------225
12.7.15 F_CTL bits on Link_Control frames ----------225
12.8 Sequence_ID (SEQ_ID) ----------226
12.9 Data Field Control (DF_CTL) ----------227
12.10 Sequence count (SEQ_CNT) ----------228
12.11 Originator Exchange_ID (OX_ID) ----------228
12.12 Responder Exchange_ID (RX_ID) ----------229
12.13 Parameter ----------229

13 Extended_Headers - 230
13.1 Scope - 230
13.2 Introduction - 230
13.3 VFT_Header and Virtual Fabrics - 231
13.3.1 Overview - 231
13.3.2 VFT Tagging PN_Port Logical Model - 232
13.3.3 Tagging Process - 233
13.3.4 VFT_Header Format - 234
13.4 Inter-Fabric Routing Extended Header (IFR_Header) - 235
13.4.1 Overview - 235
13.4.2 IFR_Header format - 235
13.5 Encapsulation Extended Header (Enc_Header) - 236

14 Optional headers - 238
14.1 Scope - 238
14.2 Introduction - 238
14.3 ESP_Header - 242
14.3.1 Overview - 242
14.3.2 Application of End-to-end ESP_Header processing - 242
14.3.3 Application of Link-by-link ESP_Header processing to a frame with an Enc_Header - - - 244
14.3.4 Application of Link-by-link ESP_Header processing to a frame with a VFT_Header - - - - 247
14.3.5 Overlapping Data Protection (ODP) - 249
14.3.5.1 Overview - 249
14.3.5.2 ESP Padding CRC Placement - 249
14.3.5.3 ESP End-to-end protection processing - 249
14.4 Network_Header - 250
14.5 Device_Header - 250
14.5.1 Overview - 250
14.5.2 Application_Header - 251

15 Data frames and responses - 252
15.1 Scope - 252
15.2 Data frames - 252
15.2.1 Introduction - 252
15.2.2 Frame Delimiters - 252
15.2.3 Addressing - 252
15.2.4 Data_Field - 253
15.2.5 Payload size - 253
15.2.6 Responses - 253
15.2.6.1 Introduction - 253
15.2.6.2 ACK frames - successful Data frame delivery - 253
15.2.6.3 Link_Response frames - Unsuccessful Data frame delivery - 254
15.3 Link_Control Frames - 254
15.3.1 Introduction - 254
15.3.2 Link_Continue function - 255
15.3.2.1 Introduction - 255
15.3.2.2 Acknowledge (ACK) - 255
15.3.2.2.1 General - 255
15.3.2.2.2 ACK_1 - 256
15.3.2.2.3 ACK_0 - 257
15.3.2.2.4 Header definition for all ACK forms - 257
15.3.2.2.4.1 Addressing - 257
15.3.2.2.4.2 F_CTL - 257
15.3.2.2.4.3 SEQ_ID - 257
15.3.2.2.4.4 SEQ_CNT - 257

15.3.2.2.4.5 Parameter field - - - 257
15.3.2.2.5 Responses - - - 258
15.3.3 Link_Response - - - 258
15.3.3.1 Introduction - - - 258
15.3.3.2 Fabric Busy (F_BSY) - - - 258
15.3.3.2.1 Description - - - 258
15.3.3.2.2 Responses - - - 259
15.3.3.3 N_Port Busy (P_BSY) - - - 259
15.3.3.3.1 Description - - - 259
15.3.3.3.2 Responses - - - 261
15.3.3.4 Reject (P_RJT, F_RJT) - - - 261
15.3.3.4.1 Introduction - - - 261
15.3.3.4.2 Parameter field - - - 262
15.3.3.4.2.1 Reject Code format - - - 262
15.3.3.4.2.2 Invalid D_ID - - - 265
15.3.3.4.2.3 Invalid S_ID - - - 265
15.3.3.4.2.4 Nx_Port not available, temporary - - - 265
15.3.3.4.2.5 Nx_Port not available, permanent - - - 266
15.3.3.4.2.6 Class not supported - - - 266
15.3.3.4.2.7 Delimiter usage error - - - 266
15.3.3.4.2.8 TYPE not supported - - - 266
15.3.3.4.2.9 Invalid Link_Control - - - 266
15.3.3.4.2.10 Invalid R_CTL field - - - 266
15.3.3.4.2.11 Invalid F_CTL field - - - 266
15.3.3.4.2.12 Invalid OX_ID - - - 266
15.3.3.4.2.13 Invalid RX_ID - - - 266
15.3.3.4.2.14 Invalid SEQ_ID - - - 266
15.3.3.4.2.15 Invalid DF_CTL - - - 266
15.3.3.4.2.16 Invalid SEQ_CNT - - - 267
15.3.3.4.2.17 Invalid Parameter field - - - 267
15.3.3.4.2.18 Exchange Error - - - 267
15.3.3.4.2.19 Protocol Error - - - 267
15.3.3.4.2.20 Incorrect length - - - 267
15.3.3.4.2.21 Unexpected ACK - - - 267
15.3.3.4.2.22 Class of service not supported by entity at FF FF FEh - - - 267
15.3.3.4.2.23 Login Required - - - 267
15.3.3.4.2.24 Excessive Sequences attempted - - - 267
15.3.3.4.2.25 Unable to Establish Exchange - - - 268
15.3.3.4.2.26 Fabric path not available - - - 268
15.3.3.4.2.27 Invalid CS_CTL Field - - - 268
15.3.3.4.2.28 Invalid class of service - - - 268
15.3.3.4.2.29 Invalid Attachment - - - 268
15.3.3.4.2.30 Vendor Specific Reject - - - 268
15.3.3.4.3 Responses - - - 268
15.3.4 Link_Control commands - - - 268
15.3.4.1 Introduction - - - 268
15.3.4.2 Link Credit Reset (LCR) - - - 268
15.3.4.2.1 Description - - - 268
15.3.4.2.2 Protocol - - - 269
15.3.4.2.3 Request Sequence - - - 269
15.3.4.2.4 Responses - - - 269
15.4 ACK generation assistance - - - 269
15.4.1 Introduction - - - 269
15.4.2 Capability Indication - - - 269

15.4.3 Applicability - - - - - - - - - - 270
15.4.4 F_CTL bits - - - - - - - - - - 270
15.4.5 Login rules - - - - - - - - - - 270
15.4.6 ACK_Form errors - - - - - - - - - - 270

16 Basic Link Services - - - - - - - - - - 271
16.1 Scope - - - - - - - - - - 271
16.2 Introduction - - - - - - - - - - 271
16.3 Basic Link Service commands - - - - - - - - - - 271
16.3.1 Introduction - - - - - - - - - - 271
16.3.2 Abort Sequence (ABTS) - - - - - - - - - - 272
16.3.2.1 Overview - - - - - - - - - - 272
16.3.2.2 Aborting Sequences using ABTS - - - - - - - - - - 274
16.3.2.2.1 Introduction - - - - - - - - - - 274
16.3.2.2.2 ABTS Initiator - - - - - - - - - - 274
16.3.2.2.3 ABTS Recipient - - - - - - - - - - 275
16.3.2.2.4 Recovery Qualifier - - - - - - - - - - 275
16.3.2.2.5 Protocol - - - - - - - - - - 276
16.3.2.2.6 Request Sequence - - - - - - - - - - 276
16.3.2.2.7 Reply Sequence - - - - - - - - - - 276
16.3.2.3 Aborting Exchanges using ABTS - - - - - - - - - - 277
16.3.2.3.1 Introduction - - - - - - - - - - 277
16.3.2.3.2 ABTS sent by the last Sequence Initiator in an open Sequence - - - - - - - - - - 278
16.3.2.3.3 ABTS sent by the last Sequence Initiator in a new Sequence - - - - - - - - - - 278
16.3.2.3.4 ABTS sent in an open or new Sequence - - - - - - - - - - 278
16.3.2.3.5 ABTS by the last Sequence Recipient - - - - - - - - - - 278
16.3.2.3.6 Request Sequence - - - - - - - - - - 278
16.3.2.3.7 Reply Sequence - - - - - - - - - - 279
16.3.3 Basic Accept (BA_ACC) - - - - - - - - - - 280
16.3.3.1 Description - - - - - - - - - - 280
16.3.3.2 Protocol - - - - - - - - - - 280
16.3.3.3 Request Sequence - - - - - - - - - - 280
16.3.3.4 Reply Sequence - - - - - - - - - - 280
16.3.4 Basic Reject (BA_RJT) - - - - - - - - - - 281
16.3.4.1 Description - - - - - - - - - - 281
16.3.4.2 Protocol - - - - - - - - - - 281
16.3.4.3 Request Sequence - - - - - - - - - - 281
16.3.4.4 Reply Sequence - - - - - - - - - - 281
16.3.5 No Operation (NOP) - - - - - - - - - - 282
16.3.5.1 Description - - - - - - - - - - 282
16.3.5.2 Protocol - - - - - - - - - - 283
16.3.5.3 Request Sequence - - - - - - - - - - 283
16.3.5.4 Reply Sequence - - - - - - - - - - 283
16.3.6 Flush Exchange and verify status (FLUSH) - - - - - - - - - - 283
16.3.6.1 Overview - - - - - - - - - - 283
16.3.6.2 Description - - - - - - - - - - 283
16.3.6.3 Request Sequence - - - - - - - - - - 284
16.3.6.4 Reply Sequence - - - - - - - - - - 285
16.3.7 Flush Exchange and verify status response (FLUSH_RSP) - - - - - - - - - - 285
16.3.7.1 Description - - - - - - - - - - 285
16.3.8 Responder Error Detected (RED) - - - - - - - - - - 288
16.3.8.1 Overview - - - - - - - - - - 288
16.3.8.2 Introduction - - - - - - - - - - 288
16.3.8.3 Request Sequence - - - - - - - - - - 288

16.3.8.4 Reply Sequence ----------289

17 Classes of service ----------290
17.1 Scope ----------290
17.2 Introduction ----------290
17.3 Class 2 - Multiplex ----------290
17.3.1 Function ----------290
17.3.2 Rules ----------291
17.3.3 Delimiters ----------292
17.3.4 Data_Field size ----------292
17.3.5 Flow control ----------292
17.4 Class 3 - Datagram ----------292
17.4.1 Function ----------292
17.4.2 Rules ----------292
17.4.3 Delimiters ----------293
17.4.4 Data_Field size ----------293
17.4.5 Flow control ----------294
17.4.6 Sequence integrity ----------294

18 Name_Identifier Formats ----------295
18.1 Scope ----------295
18.2 Introduction ----------295
18.3 IEEE 48-bit Address ----------296
18.4 IEEE Extended ----------296
18.5 Locally Assigned ----------297
18.6 IEEE Registered ----------297
18.7 IEEE Registered Extended ----------298
18.8 EUI-64 Mapped ----------298

19 Exchange, Sequence, and sequence count management ----------302
19.1 Scope ----------302
19.2 Introduction ----------302
19.2.1 Data frame transfer ----------302
19.2.2 Frame identification ----------302
19.2.3 Sequence ----------302
19.2.4 Streamed Sequences ----------302
19.2.5 SEQ_CNT ----------302
19.2.6 Exchange ----------303
19.2.7 Sequence Initiative ----------305
19.3 Applicability ----------305
19.4 Exchange rules ----------305
19.4.1 Exchange management ----------305
19.4.2 Exchange origination ----------306
19.4.3 Sequence delimiters ----------306
19.4.4 Sequence initiation ----------307
19.4.5 Sequence management ----------307
19.4.6 SEQ_CNT ----------308
19.4.7 Normal ACK processing ----------308
19.4.8 Normal Sequence completion ----------309
19.4.9 Detection of missing frames ----------310
19.4.10 Sequence errors - Class 2 ----------311
19.4.10.1 Rules common to all discard policies ----------311
19.4.10.2 Discard multiple Sequences Error Policy ----------312
19.4.10.3 Discard a single Sequence Error Policy ----------312
19.4.10.4 Process with infinite buffers Error Policy ----------312

19.4.11 Sequence errors - Class 3 - - - 313
19.4.11.1 Rules common to all discard policies - - - 313
19.4.11.2 Process with infinite buffers Error Policy - - - 313
19.4.12 Sequence Status Rules - - - 313
19.4.13 Exchange termination - - - 314
19.4.14 Exchange Status Rules - - - 314
19.5 Exchange management - - - 315
19.6 Exchange origination - - - 315
19.6.1 Introduction - - - 315
19.6.2 Exchange Originator - - - 316
19.6.3 Exchange Responder - - - 317
19.6.4 X_ID assignment - - - 317
19.6.5 X_ID interlock - - - 317
19.7 Sequence management - - - 318
19.7.1 Sequence identification - - - 318
19.7.2 Open and active Sequences - - - 318
19.7.3 Sequence_Qualifier management - - - 318
19.7.4 Sequence Initiative and termination - - - 318
19.7.5 Transfer of Sequence Initiative - - - 318
19.7.6 Sequence Termination - - - 319
19.7.6.1 Introduction - - - 319
19.7.6.2 Class 2 - - - 319
19.7.6.3 Class 3 - - - 319
19.7.6.4 End_Sequence - - - 320
19.8 Exchange termination - - - 320
19.8.1 Normal termination - - - 320
19.8.2 Abnormal termination - - - 320
19.9 Status blocks - - - 320
19.9.1 Exchange Status Block - - - 320
19.9.2 Sequence Status Block - - - 322

20 Flow control management - - - 324
20.1 Scope - - - 324
20.2 Introduction - - - 324
20.2.1 Point-to-point topology - - - 324
20.2.2 End-to-end and Buffer-to-buffer flow control - - - 324
20.2.3 Flow control dependencies on class of service - - - 324
20.2.4 Credit and Credit_Count - - - 325
20.3 End-to-end flow control - - - 326
20.3.1 End-to-end management rules - - - 326
20.3.2 Sequence Initiator - - - 327
20.3.3 Sequence Recipient - - - 328
20.3.3.1 General - - - 328
20.3.3.2 ACK_0 - - - 328
20.3.3.3 ACK_1 - - - 328
20.3.3.4 Last ACK timeout - - - 329
20.3.3.5 Streamed Sequences - - - 329
20.3.4 EE_Credit - - - 329
20.3.5 EE_Credit_CNT - - - 329
20.3.6 EE_Credit management - - - 329
20.3.7 End-to-end flow control model - - - 330
20.3.8 EE_Credit recovery - - - 331
20.3.9 Procedure to estimate end-to-end Credit - - - 331
20.3.9.1 Introduction - - - 331

20.3.9.2 Procedure steps -332
20.3.9.2.1 General -332
20.3.9.2.2 Establish Streaming Sequence -333
20.3.9.2.3 Estimate Credit Sequence -334
20.3.9.2.4 Advise Credit Sequence -334
20.4 Buffer-to-buffer flow control -335
20.4.1 Introduction -335
20.4.2 Buffer-to-buffer management rules -336
20.4.3 BB_Credit -336
20.4.4 BB_Credit_CNT -336
20.4.5 BB_Credit management -337
20.4.6 Buffer-to-buffer flow control model -337
20.4.7 Class dependent frame flow -338
20.4.8 R_RDY -340
20.4.9 BB_Credit Recovery -340
20.4.10 Alternate buffer-to-buffer Credit management -342
20.5 Combined flow control considerations -342
20.5.1 BSY / RJT in flow control -342
20.5.2 LCR in flow control -343
20.5.3 Integrated Class 2 flow control -346

21 Segmentation and reassembly -348
21.1 Scope -348
21.2 Introduction -348
21.3 Identifying and classifying IUs -348
21.4 Multiplexing IUs within a Sequence -348
21.5 Relative offset of Data_Frames in an IU -349
21.6 Transporting portions of an IU out of relative offset order -349
21.7 Login -350
21.8 Segmentation rules -350
21.9 Reassembly rules -351

22 Error detection/recovery -353
22.1 Scope -353
22.2 Introduction -353
22.3 Timeout periods -353
22.3.1 Scope -353
22.3.2 General -353
22.3.3 R_T_TOV -353
22.3.4 E_D_TOV -353
22.3.5 R_A_TOV -354
22.3.6 F_D_TOV -355
22.4 Link errors -355
22.4.1 Scope -355
22.4.2 Link Failure timeouts -355
22.4.3 Link Failure -355
22.4.4 Code violations -355
22.4.5 Primitive Sequence protocol error -355
22.4.6 Link Error Recovery -356
22.4.7 Link Recovery - secondary effects -356
22.4.7.1 Class 2 -356
22.4.7.2 Class 3 -357
22.4.8 Link Error Status Block -357
22.4.9 FEC Status Block -358
22.4.10 Bit-Error-Rate Thresholding -358

22.4.10.1 Introduction - - - 358
22.4.10.2 Types of Link Errors Caused by Bit Errors - - - 358
22.4.10.3 Error Intervals - - - 359
22.4.10.4 Bit-Error-Rate-Thresholding Measurement - - - 359
22.5 Exchange and Sequence errors - - - 359
22.5.1 Scope - - - 359
22.5.2 Link timeout - - - 359
22.5.3 Sequence timeout - - - 359
22.5.3.1 Introduction - - - 359
22.5.3.2 Class 2 - - - 360
22.5.3.3 Class 3 - - - 360
22.5.3.4 End-to-end Class 2 Credit loss - - - 361
22.5.4 Exchange Integrity - - - 361
22.5.4.1 Applicability - - - 361
22.5.4.2 Exchange management - - - 361
22.5.4.3 Exchange Error Policies - - - 361
22.5.4.3.1 Introduction - - - 361
22.5.4.3.2 Discard multiple Sequences - - - 361
22.5.4.3.3 Discard a single Sequence - - - 362
22.5.4.3.4 Process with infinite buffering - - - 362
22.5.4.4 Sequence integrity - - - 362
22.5.4.5 Sequence error detection - - - 362
22.5.4.6 X_ID processing - - - 363
22.5.5 Sequence recovery - - - 363
22.5.5.1 Introduction - - - 363
22.5.5.2 Abnormal Sequence termination - - - 363
22.5.5.2.1 Introduction - - - 363
22.5.5.2.2 Abort Sequence Protocol - - - 363
22.5.5.2.2.1 General Case - - - 363
22.5.5.2.2.2 Special case - new Exchange - - - 364
22.5.5.2.3 Recipient abnormal termination - - - 365
22.5.5.2.4 End_Sequence - - - 365
22.5.5.3 Stop Sequence Protocol - - - 365
22.5.5.4 End-to-end Credit loss - - - 366
22.6 Integrated error detection / actions - - - 366
22.6.1 Errors detected - - - 366
22.6.2 Actions by Initiator or Recipient - - - 368
22.6.2.1 Discard frame - - - 368
22.6.2.2 Transmit P_RJT frame - - - 368
22.6.2.3 Process Reject - - - 368
22.6.2.4 Transmit P_BSY frame - - - 368
22.6.2.5 Process Busy - - - 368
22.6.2.6 Perform Link Reset Protocol - - - 369
22.6.2.7 Set Abort Sequence Bits - - - 369
22.6.2.8 Perform Abort Sequence Protocol - - - 369
22.6.2.9 Abnormally terminate Sequence - - - 369
22.6.2.10 Retry Sequence - - - 369
22.6.2.11 Update LESB - - - 369
22.6.2.12 Perform Link Failure Protocol - - - 369
22.6.2.13 Error Policy processing - - - 370

23 Broadcast - - - 371
23.1 Scope - - - 371
23.2 Applicability - - - 371

23.3 Broadcast operation ----------371
23.4 Other ----------371

24 Clock synchronization service ----------372
24.1 Scope ----------372
24.2 Introduction ----------372
24.2.1 References ----------372
24.2.2 Applicability ----------372
24.2.3 Function ----------372
24.2.4 Assumptions ----------372
24.2.5 Clock Synchronization Quality of Service ----------373
24.3 ELS Command Service ----------373
24.3.1 Scope ----------373
24.3.2 ELS Commands ----------373
24.3.3 Fabric Topology ----------373
24.3.3.1 Model ----------373
24.3.3.2 Clock Synchronization Server Rules ----------373
24.3.3.3 Fabric Rules ----------374
24.3.3.4 Fabric Options ----------374
24.3.3.5 Client Rules ----------374
24.3.3.6 Client Options ----------374
24.3.4 Loop Topology ----------375
24.3.4.1 Model ----------375
24.3.4.2 L_Port Server Rules ----------375
24.3.4.3 L_Port Server Options ----------375
24.3.4.4 L_Port Client Rules ----------376
24.3.4.5 Client Options ----------376
24.4 Primitive Signal Service ----------376
24.4.1 Scope ----------376
24.4.2 Introduction ----------376
24.4.3 Communication Model ----------376
24.4.4 Requirements ----------377
24.4.4.1 Introduction ----------377
24.4.4.2 Clock Synchronization Server Rules ----------379
24.4.4.3 Fabric Rules ----------379
24.4.4.4 Client Rules ----------380

25 Congestion Signal ----------381
25.1 Overview ----------381
25.2 Protocol ----------381
25.2.1 Warning Congestion Signal ----------381
25.2.2 Alarm Congestion Signal ----------381

Annex A FC-4 specific information and parameters ----------382
A.1 Overview ----------382
A.2 SCSI specific information and parameters ----------382

Annex B CRC generation and checking ----------384
B.1 Extract from FDDI ----------384
B.2 Frame check sequence (FCS) ----------384
B.3 Definitions ----------384
B.3.1 Basic terms ----------384
B.3.2 FCS generation equations ----------385
B.3.3 FCS checking ----------385
B.4 CRC generation example for ACK_1 frame ----------385

Annex C Frame Scrambling - - - - - 388
C.1 Serial Frame Scrambling and Descrambling Implementations - - - - - 388
C.2 Parallel Frame Scrambling and Descrambling Implementations - - - - - 389
C.3 Scrambler and Descrambler Implementations in C - - - - - 393
C.4 Scrambler and Descrambler Implementation with XORs - - - - - 397
C.5 Scrambled Data Example - - - - - 398

Annex D Data transfer protocols and examples - - - - - 399
D.1 Frame level protocol - - - - - 399
D.1.1 Class 2 frame level protocol - - - - - 399
D.1.2 Class 3 Frame Level Protocol - - - - - 401
D.2 Sequence level protocol example - - - - - 402
D.3 Class 2 frame level protocol example - - - - - 406
D.4 Class 3 frame level protocol example - - - - - 407

Annex E Out of order characteristics - - - - - 408
E.1 Introduction - - - - - 408
E.2 Out of order Data frame delivery - - - - - 408
E.3 Out of order ACK transmission - - - - - 409

Annex F Link Error Status Block - - - - - 410
F.1 Introduction - - - - - 410
F.2 Link Failure Counters - - - - - 410
F.3 Invalid Transmission Word - - - - - 410
F.4 Invalid CRC Count - - - - - 410
F.5 Link Failure Counter Triggers - - - - - 410

Annex G Clock Synchronization - - - - - 412
G.1 Introduction - - - - - 412
G.2 Discussion - - - - - 412
G.2.1 Introduction - - - - - 412
G.2.2 A Model of an NL_Port - - - - - 412
G.2.3 Hardware-Assisted Clock Synchronization - - - - - 413
G.2.4 A Point-to-Point System - - - - - 414
G.2.4.1 Introduction - - - - - 414
G.2.4.2 Discussion of Errors - - - - - 416
G.2.4.2.1 Introduction - - - - - 416
G.2.4.2.2 Client Oscillator Frequency Error - - - - - 417
G.2.4.2.3 Link Propagation Delay Error - - - - - 418
G.2.4.2.4 Unload Error - - - - - 419
G.2.4.2.5 Load Error - - - - - 421
G.2.4.2.6 R/T Clock Domain Error - - - - - 422
G.2.4.2.7 Server Oscillator Error - - - - - 423
G.2.4.3 Techniques for Reducing Deterministic Errors - - - - - 423
G.2.4.3.1 A Fix for Differences in Oscillator Frequencies - - - - - 423
G.2.4.3.2 A Fix for Link Propagation Delay Error - - - - - 425
G.2.4.3.3 A Fix for Load Error - - - - - 425
G.2.4.3.4 A Fix for Unload Error - - - - - 426
G.2.4.4 Dealing With Non-Deterministic Error - - - - - 427
G.2.4.5 Dealing With Non-Monotonicity - - - - - 427
G.2.5 Fabric Considerations - - - - - 428
G.2.5.1 Introduction - - - - - 428
G.2.5.2 Discussion of Errors - - - - - 429
G.2.5.2.1 Client Oscillator Frequency Error - - - - - 429
G.2.5.2.2 Link Propagation Delay Error - - - - - 431
G.2.5.2.3 Unload Error - - - - - 431

G.2.5.2.4 Load Error - - - - 431
G.2.5.2.5 R/T Clock Domain Error - - - - 432
G.2.5.2.6 Server Oscillator Error - - - - 432
G.2.5.3 Fixes for Fabric Errors - - - - 432
G.2.6 Loop Considerations - - - - 432
G.2.6.1 Introduction - - - - 432
G.2.6.2 Discussion of Errors - - - - 433
G.2.6.3 Introduction - - - - 433
G.2.6.3.1 Node Delay - - - - 433
G.2.6.3.2 Client Oscillator Frequency Error - - - - 434
G.2.6.3.3 Link Propagation Delay Error - - - - 434
G.2.6.3.4 Unload Error - - - - 434
G.2.6.3.5 Load Error - - - - 434
G.2.6.3.6 R/T Clock Domain Error - - - - 434
G.2.6.3.7 Server Oscillator Error - - - - 434
G.2.6.4 Fixes for Loop Errors - - - - 435
G.3 An Example - - - - 435

Annex H Speed negotiation details - - - - 438
H.1 Scope - - - - 438
H.2 Basic assumptions - - - - 438
H.3 Supported configuration - - - - 439
H.4 Derivation of timing requirements and characteristics - - - - 439
H.4.1 Introduction and diagram conventions - - - - 440
H.4.2 Receiver cycle time, t_rxcycl - - - - 440
H.4.3 Master transmitter cycle time, t_txcycl - - - - 440
H.4.4 Speed stability time, t_stbl - - - - 441
H.4.5 Watchdog timer threshold, t_fail - - - - 441
H.4.6 Watchdog Timer test delay, t_wddly - - - - 442
H.4.7 Speed recording time, t_ncycl - - - - 442
H.4.8 Speed recording time initial value, t_ncinit - - - - 443
H.4.9 Parameters relating to the optional slow_wait stage - - - - 444
H.4.9.1 Low processing load sleep time, t_sleep - - - - 444
H.4.9.2 Slow_wait cycle transmit cycle delay, t_txdly - - - - 444
H.4.9.3 Periodic sync search wake time, t_wake - - - - 445
H.4.10 Duration of disruption to single loops caused by connecting speed negotiating ports to hubs 446
H.4.10.1 Introduction - - - - 446
H.4.10.2 Maximum single disruption in Wait_for_signal stage - - - - 447
H.4.10.3 Maximum single disruption in Slow_wait stage - - - - 448
H.4.10.4 Maximum single disruption in Negotiate_master stage - - - - 448
H.4.10.5 Maximum single disruption in Negotiate_follow stage - - - - 450
H.4.10.6 Maximum disruption group - Wait_for_signal - - - - 450
H.4.10.7 Maximum disruption group - Slow_wait - - - - 450
H.4.10.8 Maximum disruption group - Negotiate_master - - - - 451
H.4.10.9 Maximum disruption group - Negotiate_follow - - - - 452
H.4.10.10 Maximum single disruption overall - - - - 452
H.4.10.11 Maximum disruption group overall - - - - 453
H.4.10.12 Summary of loop disruption - - - - 454
H.4.11 Algorithm convergence time - - - - 454
H.5 Ports using separate PMD components - - - - 454
H.6 Implementation notes - - - - 456

Annex I Fibre Channel Interactions With the IEEE-SA Registration Authority - - - - 457
I.1 Overview - - - - 457

I.2 Uses of IEEE identifiers other than Name_Identifiers ---------------------------457
I.3 Historical summary of AIO, ELI-48, ELI-64, EUI-48, and EUI-64 -------------------457
I.4 Guidelines for Fibre Channel Use of the IEEE-Administered Organizational Identifiers -----458

Annex J Fibre Channel LAN Protocols Support ----------------------------------461
J.1 Overview ---461
J.2 LAN Capable Nx_Ports ---461
J.3 LAN Encapsulation --461
J.3.1 LAN Packet Formats ---461
J.3.2 FC Sequence Format for LAN Packets -------------------------------462
J.3.3 LLC/SNAP Header --463
J.3.4 LLC Header ---463
J.3.5 Frame_Header Code Points --463
J.4 Multicast and Broadcast Mapping ---------------------------------------464
J.5 Sequence Management --464
J.6 Exchange Management --464

Annex K RS-FEC Code Word Examples --465
K.1 32GFC - Idle Pattern with 64B/66B Scrambler Bypass Disabled (scr_bypass=0) --------465
K.1.1 Overview --465
K.1.2 Input to the 64B/66B to 256B/257B transcoder --------------------------466
K.1.3 Output of the 64B/66B to 256B/257B transcoder --------------------------467
K.1.4 Output of the RS(528,514) encoder ------------------------------------468
K.1.5 Output of the PN-5280 scrambler -------------------------------------469
K.2 32GFC - Idle and LPI Patterns with 64B/66B Scrambler Bypass Enabled (scr_bypass=1) --469
K.2.1 Overview --470
K.2.2 Input to the 64B/66B to 256B/257B transcoder --------------------------470
K.2.3 Output of the 64B/66B to 256B/257B transcoder --------------------------472
K.2.4 Output of the RS(528,514) encoder ------------------------------------474
K.2.5 Output of the PN-5280 scrambler -------------------------------------476
K.3 128GFC ---477
K.4 64GFC - Idle Pattern with 64B/66B Scrambler Bypass Disabled (scr_bypass=0) and Precoding Disabled ---477
K.4.1 Overview --477
K.4.2 Input to the 64B/66B to 256B/257B transcoder --------------------------478
K.4.3 Output of the 64B/66B to 256B/257B transcoder --------------------------478
K.4.4 Output of the RS(544,514) encoder ------------------------------------479
K.4.5 Output of the Gray mapper ---481
K.5 64GFC - Idle Pattern with 64B/66B Scrambler Bypass Disabled (scr_bypass=0) and Precoding Enabled ---482
K.5.1 Overview --482
K.5.2 Output of the precoder ---482
K.6 64GFC - Alignment Marker and Idle Pattern with Precoding Disabled ----------------483
K.6.1 Overview --483
K.6.2 Output of alignment marker mapping and insertion ----------------------483
K.6.3 Output of the RS(544,514) encoder ------------------------------------484
K.6.4 Output of the Gray mapper ---486
K.7 256GFC - Idle Pattern and Precoding Disabled --------------------------------487
K.7.1 Overview --487
K.7.2 Output of symbol distribution ---------------------------------------488
K.7.3 Output of the Gray mapper ---488
K.8 256GFC - Idle Pattern and Precoding Enabled --------------------------------489
K.8.1 Overview --489
K.8.2 Output of the precoder ---490
K.9 256GFC - Alignment Marker and Idle Pattern with Precoding Disabled ---------------490

K.9.1 Overview - - - 491
K.9.2 Output of alignment marker mapping and insertion - - - 491
K.9.3 Output of the RS(544,514) encoder - - - 492
K.9.4 Output of symbol distribution - - - 493
K.9.5 Output of the Gray mapper - - - 494
K.10 Single lane 128GFC using Interleaved Reed-Solomon (RS(544,514)) and Symbol Forwarding – Alignment Marker and Idle Pattern - - - 495
K.10.1 Overview - - - 495
K.10.2 Input to the 64B/66B scrambler - - - 495
K.10.3 Output of scrambler/Input to the 64B/66B to 256B/257B transcoder - - - 496
K.10.4 Output of 256B/257B transcoder with Alignment Marker insertion - - - 498
K.10.5 Output of 10-bit symbol round-robin distribution for message A - - - 499
K.10.6 Output of 10-bit symbol round-robin distribution for message B - - - 501
K.10.7 Output of Reed-Solomon encoding for message A - - - 502
K.10.8 Output of Reed-Solomon encoding for message B - - - 504
K.10.9 Output of 10-bit symbol forwarding - - - 505
K.11 Single lane 128GFC using Interleaved Reed-Solomon (RS(544,514)) and Bit Interleaving – Alignment Marker and Idle Pattern - - - 507
K.11.1 Overview - - - 508
K.11.2 Input to the 64B/66B scrambler - - - 508
K.11.3 Output of scrambler/Input to the 64B/66B to 256B/257B transcoder - - - 509
K.11.4 Output of 256B/257B transcoder with Alignment Marker insertion - - - 511
K.11.5 Output of 10-bit symbol round-robin distribution of message A - - - 512
K.11.6 Output of 10-bit symbol round-robin distribution of message B - - - 514
K.11.7 Output of Reed-Solomon encoding for message A - - - 515
K.11.8 Output of Reed-Solomon encoding for message B - - - 517
K.11.9 Output of Bit Interleaving - - - 518
K.12 Single lane 128GFC using Single Reed-Solomon (RS(544,514)) and Bit Interleaving – Alignment Marker and Idle Pattern - - - 521
K.12.1 Overview - - - 521
K.12.2 Input to the 64B/66B scrambler - - - 521
K.12.3 Output of scrambler/Input to the 64B/66B to 256B/257B transcoder - - - 522
K.12.4 Output of 256B/257B transcoder with Alignment Marker insertion - - - 523
K.12.5 Output of Reed-Solomon encoding - - - 524
K.12.6 Output of Bit Interleaving - - - 525
K.13 Single lane 128GFC using Single Reed-Solomon (RS(544,514)) and Symbol Forwarding – Alignment Marker and Idle Pattern - - - 527
K.13.1 Overview - - - 527
K.13.2 Input to the 64B/66B scrambler - - - 527
K.13.3 Output of scrambler/Input to the 64B/66B to 256B/257B transcoder - - - 528
K.13.4 Output of 256B/257B transcoder with Alignment Marker insertion - - - 529
K.13.5 L.13.5 Output of Reed-Solomon encoding - - - 530
K.13.6 Output of Symbol Forwarding - - - 531

Annex L Congestion Signal Examples - - - 533
L.1 Overview - - - 533
L.2 Resource Consumption - - - 533
L.3 Congestion Signal Generation - - - 533
L.4 Congestion Signal Examples - - - 533
L.4.1 Overview - - - 533
L.4.2 Congestion Signal Generation - - - 533
L.4.3 Resource Consumption Modeling - - - 535

Annex M Bibliography - - - 539

List of Figures

Figures **Page**

Figure 1 State diagram notation example - - - 21
Figure 2 Fibre Channel structure - - - 28
Figure 3 Node components and functional levels model - - - 31
Figure 4 Physical model - - - 32
Figure 5 Point-to-point topology - - - 34
Figure 6 Fabric topology - - - 34
Figure 7 Examples of the Arbitrated Loop topology - - - 35
Figure 8 Informative general Fabric model - - - 38
Figure 9 FC-2 building block hierarchy - - - 40
Figure 10 64B/66B Transmission Word composition - - - 61
Figure 11 64B/66B data Transmission Word body - - - 62
Figure 12 64B/66B control Transmission Word body: Idle or LPI followed by Idle or LPI - - - 65
Figure 13 64B/66B control Transmission Word body: Idle followed by SOF - - - 66
Figure 14 64B/66B control Transmission Word body: EOF followed by Idle or LPI - - - 67
Figure 15 64B/66B control Transmission Word body: Idle / other Special Function - - - 68
Figure 16 64B/66B control Transmission Word body: other Special Function / Idle - - - 69
Figure 17 64B/66B control Transmission Word body: two other Special Functions - - - 70
Figure 18 64B/66B control Transmission Word body: other Special Function / SOF - - - 71
Figure 19 64B/66B data Transmission Word body: SOF / data - - - 72
Figure 20 64B/66B data Transmission Word body: Data / EOF - - - 73
Figure 21 64B/66B control Transmission Word body: receiver detected error - - - 74
Figure 22 32GFC 256B/257B encoding of four data words - - - 77
Figure 23 32GFC 256B/257B encoding of three data words followed by one control word - - - 78
Figure 24 32GFC 256B/257B encoding of one control word followed by three data words - - - 78
Figure 25 32GFC 256B/257B encoding of four control words - - - 79
Figure 26 32GFC 256B/257B encoding of one data word, followed by one control word, followed by two data words - - - 79
Figure 27 PN-5280 as a linear feedback shift register - - - 80
Figure 28 32GFC 256B/257B transmit bit ordering - - - 82
Figure 29 32GFC 256B/257B receive bit ordering - - - 84
Figure 30 64GFC 256B/257B transmit bit ordering - - - 89
Figure 31 64GFC 256B/257B receive bit ordering - - - 90
Figure 32 Transmitter Training Signal - - - 91
Figure 33 Training Frame format - - - 92
Figure 34 Differential Manchester coding - - - 93
Figure 35 Frame marker signal - - - 93
Figure 36 32GFC frame marker signal - - - 94
Figure 37 PRBS-11 as a linear feedback shift register - - - 97
Figure 38 128GFC RS-FEC sub layer functional block diagram - - - 100
Figure 39 Transmit bit ordering - - - 103
Figure 40 Receive bit ordering - - - 104
Figure 41 256GFC RS-FEC sub layer functional block diagram - - - 105
Figure 42 256GFC 256B/257B transmit bit ordering - - - 108
Figure 43 256GFC 256B/257B receive bit ordering - - - 111
Figure 44 128GFC 256B/257B Interleaved Reed-Solomon transmit bit ordering - - - 119
Figure 45 128GFC 256B/257B Interleaved Reed-Solomon receive bit ordering - - - 121
Figure 46 128GFC 256B/257B Single Reed-Solomon transmit bit ordering - - - 123
Figure 47 128GFC 256B/257B Single Reed-Solomon receive bit ordering - - - 124
Figure 48 Receiver state diagram - - - 127
Figure 49 FC_Port partial state machine transitions - - - 137
Figure 50 Physical architecture of the speed negotiating link - - - 145

Figure 51 128GFC and 256GFC speed negotiation state machine -148
Figure 52 Overview of the speed negotiation algorithm stages -150
Figure 53 Stage diagram symbols -152
Figure 54 Delay / test operations -153
Figure 55 Wait_for_signal flowchart -155
Figure 56 Negotiate_master and watchdog timer flowchart -157
Figure 57 Negotiate_follow flowchart -159
Figure 58 Slow_wait flowchart -161
Figure 59 Optical Module timing parameters -164
Figure 60 Transmitter training flow -168
Figure 61 Diagram of Training_Sequencer state machine flow -171
Figure 62 Diagram of Cn_Controller state machine flow -175
Figure 63 Diagram of Cn_Responder state machine flow -179
Figure 64 256G/64GFC transmitter training flow -184
Figure 65 Link speed negotiation to Transmitter Training for 64GFC links - - - - - - - - - - - - - - - - - - -186
Figure 66 Example LSN Tx rate change timing diagram -187
Figure 67 Example LSN Rx rate change timing diagram -188
Figure 68 Overview of LPI Mode operation -192
Figure 69 LPI Mode transmitter state diagram -194
Figure 70 LPI Mode receiver state diagram -196
Figure 71 FC-2 frame format -198
Figure 72 Informative diagram of mapping CRC scope to FCS input -208
Figure 73 Informative diagram of mapping FCS coefficients to CRC field - - - - - - - - - - - - - - - - - - -209
Figure 74 VFT Tagging PN_Ports -231
Figure 75 Logical model of a VFT Tagging PN_Port -232
Figure 76 The tagging process -233
Figure 77 Frame structure when ESP_Header is not used -239
Figure 78 Frame structure with End-to-end ESP_Header and ESP_Trailer - - - - - - - - - - - - - - - - - -240
Figure 79 Frame structure with Link-by-link ESP_Header and ESP_Trailer - - - - - - - - - - - - - - - - - -241
Figure 80 Exchange - Sequence relationship -304
Figure 81 Exchange origination -316
Figure 82 Physical flow control model for Class 2 and Class 3 -325
Figure 83 End-to-end flow control model -331
Figure 84 Procedure to estimate end-to-end Credit -333
Figure 85 Buffer-to-buffer flow control model -337
Figure 86 Buffer-to-buffer - Class 2 frame flow with delivery or non-delivery to a Fabric - - - - - - - -338
Figure 87 Buffer-to-buffer - Class 2 frame flow with delivery or non-delivery to a PN_Port - - - - - -339
Figure 88 Buffer-to-buffer - Class 3 frame flow -340
Figure 89 LCR frame flow and possible responses -344
Figure 90 LCR flow control model -345
Figure 91 Integrated Class 2 flow control -346
Figure 92 Link Recovery hierarchy -356
Figure 93 ELS Clock Sync model – Fabric -373
Figure 94 ELS Clock Sync model – loop -375
Figure 95 Clock Synchronization data distribution -377
Figure 96 Synchronization primitive substitution for Idle srimitives in inter-frame interval - - - - - - -377

List of Tables

Tables **Page**

Table 1 Comparison of numbering conventions ---------- 19
Table 2 Bit designations ---------- 46
Table 3 Conversion Example ---------- 47
Table 4 Valid Data Characters ---------- 48
Table 5 Valid Special Characters ---------- 52
Table 6 Delayed Code Violation example ---------- 54
Table 7 8B/10B Frame Delimiters ---------- 56
Table 8 8B/10B Primitive Signals ---------- 57
Table 9 8B/10B Primitive Sequences ---------- 59
Table 10 Valid 64B/66B Transmission Word type values ---------- 63
Table 11 Valid control code values ---------- 64
Table 12 Valid order code values ---------- 64
Table 13 64B/66B representation of frame delimiter Special Functions ---------- 75
Table 14 64B/66B representation of Primitive Signal Special Functions ---------- 75
Table 15 64B/66B representation of Primitive Sequence Special Functions ---------- 76
Table 16 FEC transmission code ---------- 92
Table 17 Training Frame Control field ---------- 95
Table 18 Training Frame Status field ---------- 96
Table 19 64GFC Training Frame Control field ---------- 98
Table 20 64GFC Training Frame Status field ---------- 99
Table 21 128GFC FEC Alignment Marker ----------101
Table 22 256GFC FEC Alignment Marker ----------106
Table 23 Single Reed-Solomon Symbol Forwarding or Interleaved Reed-Solomon Symbol Forwarding Alignment Marker (AM) ----------113
Table 24 Single Reed-Solomon Bit Interleaving Alignment Marker (Inserted_AM) ----------114
Table 25 Interleaved Reed-Solomon Bit Interleaving Alignment Marker (Inserted_AM) ----------115
Table 26 FC_Port states ----------138
Table 27 Transitions from the Active State ----------140
Table 28 Timing parameters with a range ----------164
Table 29 Constant timing parameters ----------164
Table 30 Optical module timing parameter values ----------165
Table 31 Transmitter LPI Mode timing parameters ----------192
Table 32 Receiver LPI Mode timing parameters ----------193
Table 33 Frame byte order ----------200
Table 34 Frame_Header ----------210
Table 35 R_CTL - Type Code Summary ----------211
Table 36 Device_Data Information Categories ----------212
Table 37 Data Descriptor Payload ----------212
Table 38 FC-4 Link_Data Information Categories ----------213
Table 39 Video_Data Information Categories ----------213
Table 40 Extended Routing Information Categories ----------213
Table 41 Domain Controller and Well-known address identifiers ----------215
Table 42 CS_CTL field ----------215
Table 43 Priority field ----------216
Table 44 TYPE codes - Link Service ----------217
Table 45 TYPE codes - Video_Data ----------217
Table 46 TYPE codes - FC-4 (Device_Data and Link_Data) ----------218
Table 47 Exchange/Sequence Control (F_CTL) ----------220
Table 48 Abort Sequence Condition Bits Definition by Sequence Initiator ----------223
Table 49 Abort Sequence Condition Bits Definition by Sequence Recipient ----------224
Table 50 F_CTL bit interactions on Data frames ----------225

Table 51 F_CTL bit interactions on ACK, BSY or RJT - - - 226
Table 52 DF_CTL bit definition - - - 227
Table 53 Extended_Headers General Structure - - - 230
Table 54 Extended_Headers Types - - - 230
Table 55 VFT_Header Format - - - 234
Table 56 VF_ID Values - - - 235
Table 57 IFR_Header format - - - 235
Table 58 exp_timestamp field - - - 236
Table 59 Enc_Header format - - - 237
Table 60 End-to-end ESP_Header and ESP_Trailer - - - 244
Table 61 Link-by-link ESP_Header and ESP_Trailer in a frame with an Enc_Header - - - 246
Table 62 Link-by-link ESP_Header and ESP_Trailer in a frame with a VFT_Header - - - 248
Table 63 ESP Padding field when ESP End-to-end protection enabled - - - 249
Table 64 Network_Header - - - 250
Table 65 Application_Header - - - 251
Table 66 Allowable Data frame delimiters - - - 252
Table 67 ACK Frames by Class - - - 253
Table 68 Link_Response Frames by Class - - - 254
Table 69 Link_Control Information Categories - - - 254
Table 70 Link_Control frame delimiters - - - 255
Table 71 ACK precedence - - - 256
Table 72 F_BSY Reason Codes - - - 259
Table 73 P_BSY code format - - - 260
Table 74 P_BSY action codes - - - 261
Table 75 P_BSY Reason Codes - - - 261
Table 76 Reject Code format - - - 263
Table 77 Reject Action Codes - - - 263
Table 78 Reject Reason Codes - - - 264
Table 79 Basic Link Service Information Categories - - - 272
Table 80 ABTS Parameter field - - - 273
Table 81 ABTS abort reason codes - - - 273
Table 82 BA_ACC Payload - - - 279
Table 83 BA_RJT Payload Format - - - 281
Table 84 BA_RJT reason codes - - - 282
Table 85 BA_RJT Reason Code Explanation - - - 282
Table 86 FLUSH Payload - - - 284
Table 87 FLUSH_RSP Payload - - - 286
Table 88 Flags Field Definition - - - 287
Table 89 Name_Identifier format - - - 295
Table 90 NAA identifiers - - - 295
Table 91 NAA IEEE 48-bit Address Name_Identifier format - - - 296
Table 92 NAA IEEE Extended Name_Identifier format - - - 296
Table 93 NAA Locally Assigned Name_Identifier format - - - 297
Table 94 NAA IEEE Registered Name_Identifier format - - - 297
Table 95 NAA IEEE Registered Extended Name_Identifier format - - - 298
Table 96 NAA EUI-64 Mapped Name_Identifier Format - - - 299
Table 97 EUI-64 conversions to and from an NAA EUI-64 Mapped Name_Identifier - - - 300
Table 98 EUI-48 conversions to and from an NAA EUI-64 Mapped Name_Identifier - - - 301
Table 99 Exchange Status Block - - - 321
Table 100 E_STAT item in the Exchange Status Block - - - 321
Table 101 Sequence Status Block - - - 322
Table 102 S_STAT item of the Sequence Status Block - - - 323
Table 103 Flow control applicability - - - 324
Table 104 End-to-end flow control management - - - 327

Table 105 Buffer-to-buffer flow control management -336
Table 106 Integrated Class 2 flow control management -347
Table 107 Segmentation and reassembly rules summary -352
Table 108 Link Error Status Block format for RLS command -357
Table 109 FEC Status Block -358
Table 110 Detailed errors and actions -366
Table 111 Neutral Disparity Character Values -378

FOREWORD

(This Foreword is not part of INCITS.xxx-200x)

Technical Committee T11 of Accredited Standards Committee INCITS developed this standard during 2011-2018. The standards approval process started in 2018. This document includes annexes that are informative, and are not considered part of the standard.

Requests for interpretation, suggestions for improvement or addenda, or defect reports are welcome. They should be sent to the InterNational Committee for Information Technology (INCITS), 1250 Eye Street, NW, Suite 200, Washington, DC 20005.

This standard was processed and approved for submittal to ANSI by INCITS. Committee approval of the standard does not necessarily imply that all committee members voted for approval. At the time it approved this standard, INCITS had the following members:

(to be filled in by INCITS)

INCITS Technical Committee T11 on Fibre Channel Interfaces, which reviewed this standard, had the following voting members:

Steven L. Wilson, Chair
Craig W. Carlson, Vice-Chair
Richard Johnson, Secretary

Organization Represented	*Name of Representative*
Company	Principal
	Alternate (Alt.)

INCITS Task Group T11.3 on Fibre Channel Interconnection Schemes, which developed and reviewed this standard, had the following members:

Craig W. Carlson, Chair
Roger Hathorn, Vice-Chair
Patty Driever, Secretary

Organization Represented	*Name of Representative*
Company	Principal
	Alternate (Alt.)

Draft Proposed American National Standard for Information Technology –

Fibre Channel – Framing and Signaling - 6 (FC-FS-6)

1 Scope

This standard describes the framing and signaling interface of a high performance serial link for support of FC-4s associated with upper level protocols (e.g., SCSI, IP, SBCCS, VI).

This standard is based on FC-FS-5 (ANSI INCITS 545-2018) with subsequent modifications approved by the member body that originally authored and approved FC-FS-5.

2 References

2.1 Qualification and availability of references

The references listed in this clause contain provisions that, through reference in this text, constitute provisions of this document. At the time of publication, the editions indicated were valid. All standards are subject to revision, and parties to agreements based on this standard are encouraged to investigate the possibility of applying the most recent editions of the standards listed in this clause.

Orders for ISO Standards and ISO publications should normally be addressed to the ISO member in your country. If that is impractical, ISO Standards and ISO publications may be ordered from ISO Central Secretariat (ISO/CS):

Phone	+41 22 749 01 11
Fax	+41 22 749 09 47
E-mail	sales@iso.org
Post	ISO, 1, ch. de la Voie-Creuse, CH-1211 Geneva 20, Switzerland

In order to avoid delivery errors, it is important that you accurately quote the standard's reference number given in the ISO catalogue. For standards published in several parts, you should specify the number(s) of the required part(s). If not, all parts of the standard will be provided.

Copies of the following documents may be obtained from ANSI, an ISO member organization:

Approved ANSI standards;
approved international and regional standards (ISO and IEC); and
approved foreign standards (including JIS and DIN).

For further information, contact the ANSI Customer Service Department:

Phone	+1 212-642-4980
Fax:	+1 212-302-1286
Web:	http://www.ansi.org
E-mail:	info@ansi.org

or the InterNational Committee for Information Technology Standards (INCITS):

Phone	202-626-5738
Web:	http://www.incits.org
E-mail:	incits@itic.org

IETF Request for Comments (RFCs) may be obtained directly from the IETF web site at http://www.ietf.org/rfc.html.

2.2 Approved references

10GFC: ISO/IEC 14165-116:2005, *Information technology -- Fibre Channel -- Part 116: 10 Gigabit (10GFC)* [ANSI INCITS 364-2003]

FC-AE-1553: ISO/IEC TR 14165-312:2009, *Information technology -- Fibre Channel Avionics Environment - Upper Layer Protocol and Profile based on MIL-STD-1553B Notice 2* [INCITS TR-42-2007]

FC-AE-ASM: INCITS/TR-41:2006, *Information technology -- Fibre Channel Avionics Environment - Anonymous Subscriber Messaging (ASM)*

FC-AL-2: ISO/IEC 14165-122:2005, *Information technology -- Fibre Channel -- Part 122: Arbitrated Loop-2* [ANSI INCITS 332-1999 (R2004) with ANSI INCITS 332-1999/AM1-2003]

FC-AL-2 AM1: ISO/IEC 14165-122:2005/Amd 1:2008, *Information technology -- Fibre Channel -- Part 122: Arbitrated Loop-2* [ANSI INCITS 332-1999/AM2-2006]

FC-AV: ISO/IEC 14165-321:2009, *Information technology -- Fibre Channel -- Part 321: Audio-Visual (FC-AV)* [ANSI INCITS 356-2001]

FC-BaseT: ISO/IEC 14165-151:2017 (Ed. 1), *Information technology -- Fibre Channel -- Part 151: Physical Interfaces -- 2 (FC-BaseT)*

FC-BB-6: ANSI INCITS 509-2014, *Fibre Channel – Backbone – 6 (FC-BB-6)*

FC-FS-4: ANSI INCITS 488-2016*: Framing and Signaling – 4 (FC-FS-4)*

FC-GS-7: ANSI INCITS 510-2017, *Fibre Channel – Generic Services – 7 (FC-GS-7)*

FC-IFR: ANSI INCITS 475-2011*, Fibre Channel – Interfabric Routing (FC-IFR)*

FC-LS-3: ANSI INCITS 487-2018, *Fibre Channel – Link Services -- 3 (FC-LS-3)*

FC-NVMe: INCITS 540-2018, *Fibre Channel – Non-Volatile Memory Express (FC-NVMe)*

FC-PI-2: ANSI INCITS 404-2006, *Information technology -- Fibre Channel -- Part 142: Physical Interfaces -- 2 (FC-PI-2)*

FC-PI-3: ANSI INCITS 460-2011, *Fibre Channel – Physical Interfaces -- 3 (FC-PI-3)*

FC-PI-4: ANSI INCITS 450 -2009, *Information technology -- Fibre Channel -- Part 142: Physical Interfaces -- 4 (FC-PI-4)*

FC-PI-5: ANSI INCITS 479-2011, *Fibre Channel – Physical Interfaces – 5 (FC-PI-5)*

FC-PI-6: ANSI INCITS 512-2015, *Fibre Channel – Physical Interfaces – 6 (FC-PI-6)*

FC-PI-6P: INCITS 533-2016, *Fibre Channel – Physical Interfaces – 6P 128GFC Four Lane Parallel (FC-PI-6P)*

FC-SATA: ANSI INCITS 437:2008, *Fibre Channel – SATA Tunnelling Protocol (FC-SATA)*

FC-SB-6: ANSI INCITS 544-2017, *Fibre Channel – Single Byte Command Set -- 6 (FC-SB-6)*

FC-SP-2: ANSI INCITS 496-2012, *Fibre Channel – Security Protocols – 2 (FC-SP-2)*

FC-SP-2/AM1:ANSI INCITS 496-2012/AM1-2015, *Fibre Channel – Security Protocols – 2 (FC-SP-2/AM1)*

FC-SW-6: ANSI INCITS 511-2016, *Information technology -- Fibre Channel -- Part : Switch Fabric - 6 (FC-SW-6)*

FC-VI: ISO/IEC 14165-331:2007, *Information technology -- Fibre Channel -- Part 331: Virtual Interface Architecture Mapping (FC-VI)* [ANSI INCITS 357-2001]

FCP-4: ISO/IEC 14776-224, *Information technology -- Small computer system interface (SCSI) -- Part 224: Fibre channel protocol for SCSI, fourth version*

FDDI-MAC: ISO/IEC 9314-2:1989, *Information processing systems -- Fibre Distributed Data Interface (FDDI) -- Part 2: Token Ring Media Access Control (MAC)* [ANSI INCITS 139-1987]

IEEE 802: ISO/IEC TR 8802-1:2001, *Information technology -- Telecommunications and information exchange between systems -- Local and metropolitan area networks -- Specific requirements -- Part 1: Overview of Local Area Network Standards* [ANSI IEEE standard 802-2001]

IEEE 802.1D:ISO/IEC 15802-3:1998, *Information technology -- Telecommunications and information exchange between systems -- Local and metropolitan area networks -- Common specifications -- Part 3: Media Access Control (MAC) Bridges* [ANSI IEEE Standard 802.1D-1998]

IEEE 802.3-2015: IEEE 802.3-2015, *Information technology -- Telecommunications and information exchange between systems -- Local and metropolitan area networks -- Specific requirements -- Part 3: Carrier Sense Multiple Access with Collision Detection (CSMA/CD) access method and physical layer specifications.*

IEEE 802.3cd-2018: IEEE 802.3cd-2018: *Standard for Ethernet Amendment: Media Access Control Parameters for 50 Gb/s and Physical Layers and Management Parameters for 50 Gb/s, 100 Gb/s, and 200 Gb/s Operation*

IEEE-LLC: ISO/IEC TR 8802-2:1998, *Information technology -- Telecommunications and information exchange between systems -- Local and metropolitan area networks -- Specific requirements -- Part 2: Logical link control* [IEEE Standard 802-2:1998]

SAM-5: ISO/IEC 14776-415, *Information technology -- Small computer system interface (SCSI) -- Part 415: SCSI architecture model - 5 (SAM-5)*

2.3 References under development

FC-GS-8: INCITS 548, *Fibre Channel – Generic Services – 8 (FC-GS-8)*

FC-LS-4: INCITS 553, *Fibre Channel – Link Services – 4 (FC-LS-4)*

FC-NVMe-2::INCITS 556, *Fibre Channel - NVM Express over Fibre Channel – 2 (FC-NVMe-2)*

FC-SW-7: INCITS 547, *Fibre Channel – Switch Fabric – 7 (FC-SW-7)*

FC-PI-7: INCITS 543, *Fibre Channel – Physical Interface – 7 (FC-PI-7)*

FC-PI-7P: INCITS 559, *Fibre Channel – Physical Interface – 7P (FC-PI-7P)*

FC-RDMA: INCITS 564, *Fibre Channel – Remote Direct Memory Access (FC-RDMA)*

2.4 Other references

ETHER TYPES: IEEE ETHER TYPES registry, maintained at URL http://standards.ieee.org/regauth/ethertype/eth.txt.

IETF Request for Comments (RFCs) may be obtained directly from the IETF web site (http://www.ietf.org/rfc.html).

RFC 791: IETF RFC 791, *Internet Protocol*

RFC 2030: IETF RFC 2030, *Simple Network Time Protocol (SNTP) Version 4 for IPv4, IPv6 and OSI*

RFC 2373: IETF RFC 2373, *IP Version 6 Addressing Architecture*

RFC 2460: IETF RFC 2460, *Internet Protocol, Version 6 (IPv6) Specification*

RFC 2597: IETF RFC 2597, *Assured Forwarding PHB Group*

RFC 2598: IETF RFC 2598, *An Expedited Forwarding PHB*

RFC 2625: IETF RFC 2625, *IP and ARP over Fibre Channel*

RFC 3831: IETF RFC 3831, *Transmission of IPv6 Packets over Fibre Channel*

RFC 4303: IETF RFC 4303, *IP Encapsulating Security Payload (ESP)*

RFC 4338: IETF RFC 4338, *Transmission of IPv6, IPv4 and ARP Packets over Fibre Channel*

ARINC 818 Avionics Digital Video Bus, High Data Rate Standard may be obtained from ARINC, 2551 Riva Road, Annapolis, Maryland 21401 USA, www.arinc.com or www.arinc.com/cf/store.

ARINC 818: ARINC 818, *Avionics Digital Video Bus, High data Rate*

Use of the IEEE assigned Organizationally Unique Identifier with ANSI/IEEE Std 802-2001 Local and Metropolitan Area Networks by the IEEE Standards Association. Available at http://standards.ieee.org/regauth/oui/tutorials/lanman.html.

Guidelines for 64-bit Global Identifier (EUI-64™) Registration Authority by the IEEE Standards Association. Available at http://standards.ieee.org/regauth/oui/tutorials/EUI64.html.

SCSI OUI/Company_ID tutorial by the IEEE Standards Association. Available at http://standards.ieee.org/regauth/oui/tutorials/SCSI.html.

3 Definitions, abbreviations, conventions and keywords

3.1 Definitions

3.1.1 128GFC
encoding of four parallel lanes of 32GFC in each direction (see FC-PI-6P)

3.1.2 16GFC
Fibre Channel speed (see FC-PI-5)

3.1.3 256B/257B
transformation of four consecutive 64B/66B Transmission Words into 256B/257B Transmission Words and from 256B/257B Transmission Words into four consecutive 64B/66B Transmission Words used in Fibre Channel to decrease the probability of undetected errors and improve the electrical balance of signals on a link (see 5.4)

3.1.4 256GFC
encoding of four parallel lanes of 64GFC in each direction (see FC-PI-7P)

3.1.5 32GFC
Fibre Channel speed (see FC-PI-6)

3.1.6 64B/66B
transformation of pairs of words and/or Special Functions into Transmission Words and from Transmission Words into pairs of words and/or Special Functions used in Fibre Channel to decrease the probability of undetected errors and improve the electrical balance of signals on a link (see 5.3)

3.1.7 64GFC
Fibre Channel speed (see FC-PI-8

3.1.8 8B/10B
transformation of words or Special Functions into Transmission Words and from Transmission Words into words and Special Functions used in Fibre Channel to decrease the probability of undetected errors and improve the electrical balance of signals on a link (see 5.2)

3.1.9 acknowledged class of service
class of service that acknowledges a transfer (i.e., Class 2 service (see 4.7.2 and 17.3) and Class F service (see FC-SW-7))

3.1.10 address identifier
address value used to identify source (S_ID) or destination (D_ID) of a frame (see 12.4)

3.1.11 Arbitrated Loop topology
Fibre Channel topology where L_Ports use arbitration to gain access to the loop (see FC-AL-2)

3.1.12 buffer-to-buffer Credit (BB_Credit)
limiting value for BB_Credit_CNT in the buffer-to-buffer flow control model (see 20.2.4)

3.1.13 buffer-to-buffer Credit_Count (BB_Credit_CNT)
counter used in the buffer-to-buffer flow control model (see 20.2.4)

3.1.14 B_Port
Fabric inter-element port used to connect bridge devices with E_Ports on a Switch (see FC-SW-7)

3.1.15 bridge
device that encapsulates/de-encapsulates Fibre Channel frames within another protocol (e.g., Fibre Channel encapsulated within IP)

3.1.16 buffer
logical construct that holds a single frame

3.1.17 character
encoding of a data byte or control value within an 8B/10B Transmission Word transmitted and interpreted by the FC-1 level of Fibre Channel (see 5.2)

3.1.18 circuit
bi-directional path within the Fabric

3.1.19 class of service
type of frame delivery service used by the communicating Nx_Ports that may also be supported through a Fabric (see 4.7 and 17)

3.1.20 Class 2 service
class of service that multiplexes frames at frame boundaries to or from one or more Nx_Ports with acknowledgement provided (see 4.7.2 and 17.3)

3.1.21 Class 3 service
class of service that multiplexes frames at frame boundaries to or from one or more Nx_Ports without acknowledgement (see 4.7.3 and 17.4)

3.1.22 Class F service
class of service (see FC-SW-7) that multiplexes frames at frame boundaries with acknowledgement provided

3.1.23 code violation
error condition that occurs when a received Transmission Word is not able to be decoded using the validity checking rules specified by the transmission code (see 5)

3.1.24 comma
seven-bit sequence 0011111b or 1100000b in an 8B/10B encoded stream (see 5.2.7.1)

3.1.25 continuously increasing relative offset
condition of operation that requires frames ordered by SEQ_CNT within a Sequence to have a larger relative offset value in each frame (see 21)

3.1.26 Core N_Port_Name
N_Port_Name associated with a VFT Tagging PN_Port, and not with any other PN_Port or FC_Port within the scope of its Name_Identifier format (see 13.3.2)

3.1.27 Credit
maximum number of buffers available at a recipient to receive frames from a transmitting FC_Port (see 20.2.4)

3.1.28 current running disparity
running disparity present at a transmitter when 8B/10B encoding of a data byte or special code is initiated, or at a receiver when 8B/10B decoding of a Transmission Character is initiated (see 5.2.4)

3.1.29 data byte
string of eight contiguous unencoded bits within FC-1 that represents a value in the range 0 to 255, inclusive

3.1.30 data character
8B/10B Transmission Character associated by the transmission code with a data byte (see 5.2.3)

3.1.31 Data frame
Device_Data frame, a Video_Data frame, or an FC-4 Link_Data frame (see 12.3.2)

3.1.32 decoding
validity checking of received Transmission Words and generation of words and Special Functions from those Transmission Words (see 5)

3.1.33 delimiter
Ordered Set used to indicate a frame boundary (see 5.2.7.2, 5.3.7.1, 11.3.7, and 11.3.8)

3.1.34 descrambling
reversal of the mathematical transformation of the bits within data that is accomplished by Frame Scrambling (see 11.3.6) or 64B/66B decoding (see 5.3)

3.1.35 Destination_Identifier (D_ID)
address identifier used to indicate the targeted destination Nx_Port of the transmitted frame (see 12.4)

3.1.36 destination Nx_Port
Nx_Port to where a frame is targeted

3.1.37 discard policy
error handling policy where a Sequence Recipient is able to discard Data frames received following detection of a missing frame in a Sequence (see 22.5.4.3)

3.1.38 disparity
difference between the number of ones and zeros in an 8B/10B Transmission Character (see 5.2.4)

3.1.39 Domain Controller
entity that controls activity within a given domain

3.1.40 Domain_ID
highest or most significant hierarchical level in the three-level addressing hierarchy (i.e., the most significant byte of the address identifier) (see 12.4.2 and see FC-SW-7)

3.1.41 Emission Lowering Protocol
option in the 8B/10B transmission code that uses the ARBff Primitive Signal, in place of the Idle Primitive Signal, as a Fill Word for maintaining link synchronization in the absence of other Transmission Words (see 11.3.5)

3.1.42 encoding
generation of Transmission Words from words and Special Functions (see 5)

3.1.43 end-to-end Credit (EE_Credit)
limiting value for EE_Credit_CNT in the end-to-end flow control model (see 20.2.4)

3.1.44 end-to-end Credit_Count (EE_Credit_CNT)
counter used in the end-to-end flow control model (see 20.2.4)

3.1.45 End-to-end ESP_Header
ESP_Header processing applied by a Sequence Initiator and removed by the Sequence Recipient on a frame-by-frame basis (see 14.3.2)

3.1.46 E_Port
Fabric expansion port that connects to another E_Port or B_Port to create an Inter-Switch Link (see FC-SW-7)

3.1.47 Exchange
unit of protocol activity that transfers information between a specific Originator Nx_Port and specific Responder Nx_Port using one or more related non-concurrent Sequences that may flow in the same or opposite directions

3.1.48 Exchange_Identifier (X_ID)
collective reference to OX_ID (see 12.11) and RX_ID (see 12.12)

3.1.49 Exchange Status Block
logical construct that contains the status of an Exchange

3.1.50 Extended_Header
sequence of words that may be present in a frame between the SOF delimiter and the Frame_Header to support frame handling functions not provided by the Frame_Header (see 13)

3.1.51 F_Port
FC_Port within the Fabric that attaches to a PN_Port through a link

Note 1 to entry: An F_Port is addressable by Nx_Ports communicating through the PN_Port attached to the F_Port by the F_Port Controller well-known address identifier (i.e., FF FF FEh) (see FC-SW-7).

3.1.52 Fabric
entity that interconnects Nx_Ports attached to it and is capable of routing frames by using the D_ID information in a FC-2 Frame_Header (see 4.6.3)

3.1.53 Fabric_Name
Name_Identifier associated with a Fabric (see 18 and FC-LS-4)

3.1.54 FC-0 level
level in the Fibre Channel architecture and standards set that defines transmission media, transmitters, and receivers and their interfaces (see FC-PI-x)

3.1.55 FC-1 level
level in the Fibre Channel architecture and standards set that defines the transmission protocol that includes the serial encoding, decoding, and error control (see 4.2.3)

3.1.56 FC-2 level
level in the Fibre Channel architecture and standards set that defines the rules and provides mechanisms needed to transfer blocks of data end-to-end (see 4.2.4)

3.1.57 FC-2 Multiplexer sublevel
sublevel (see 4.2.4) in the Fibre Channel architecture and standards set that routes frames between one or more FC-2V instances (e.g., VN_Ports) and one or more LCFs, based on the D_ID in the Frame_Header (see 12.4) and the VF_ID in the VFT_Header if there is a VFT_Header (see 13.3.4)

3.1.58 FC-2 Physical sublevel
sublevel in the Fibre Channel architecture and standards set that defines the rules and provides mechanisms that shall be used to transfer frames via a specific FC-1 level (see 4.2.4)

3.1.59 FC-2 Virtual sublevel
sublevel in the Fibre Channel architecture and standards set that defines functions and facilities that a VN_Port may provide for use by an FC-4 level, regardless of the FC-1 that is used (see 4.2.4)

3.1.60 FC-3 level
level in the Fibre Channel architecture and standards set that defines a set of services that are common across multiple Nx_Ports of a node

3.1.61 FC-4 level
level in the Fibre Channel architecture and standards set that defines the mapping between the lower levels of the Fibre Channel and an Upper Level Protocol

Note 1 to entry: FC-4s are not specified by this standard.

3.1.62 FC_Port
port that is capable of transmitting and receiving Fibre Channel frames according to the FC-0, FC-1, FC-2P, FC-2M, FC-2V, and FC-3 levels of the Fibre Channel standards

Note 1 to entry: An FC_Port contains at least one LCF and at least one VN_Port (e.g., An F_Port Controller) (see FC-SW-8), and may contain other types of FC-2V instances (e.g., an F_Port Controller) (see FC-SW-7).

3.1.63 FL_Port
F_Port that contains Arbitrated Loop functions associated with Arbitrated Loop topology (see FC-AL-2)

3.1.64 F_Port_Name
Name_Identifier associated with an F_Port (see 18 and FC-LS-4)

3.1.65 fibre
unidirectional data communication medium used in a manner compliant with FC-PI-x or FC-AL-2

3.1.66 Fibre Channel interaction space
set of Fibre Channel ports, devices, and Fabrics that are connected by Fibre Channel links or are accessible by a common instance of an administrative tool or tools

3.1.67 Fibre Channel Protocol (FCP)
standard SCSI device interface using Fibre Channel communication (see FCP-4)

3.1.68 Fill Word
special function transmitted when no frames or other Special Functions are being transmitted (see 11.3.2)

3.1.69 Forward Error Correction (FEC)
encoding of a stream of 64B/66B Transmission Words to allow transparent correction of some bit errors (see 5.3.1)

3.1.70 frame
indivisible unit of information used by FC-2 (see 11.2)

3.1.71 frame content
information contained in a frame between its SOF and EOF delimiters, excluding the delimiters (see 11.4)

3.1.72 Frame_Header
sequence of words that follows the SOF delimiter and any Extended_Headers in a frame to control link operations and device protocol transfers as well as detect missing or out of order frames (see 12)

3.1.73 Frame Scrambling
modifying data to minimize repetitive character patterns (see 11.3.6)

3.1.74 Fx_Port
switch port capable of operating as an F_Port or FL_Port (see FC-AL-2)

3.1.75 gateway
device that converts an FC-4 protocol to another protocol (e.g., FCP to iSCSI)

3.1.76 Host
computer system that provides end users services such as computation and storage access

3.1.77 Host Electrical Transceiver
identifies the port of an electrical interface connected to an optical module (see FC-PI-x)

3.1.78 hub
device that interconnects L_Ports but does not provide FL_Port capabilities

3.1.79 Idle
Ordered Set that is normally transmitted between frames (see 5.2.7.3 and 5.2.7.2)

3.1.80 IEEE-Administered Organizational Identifier (AOI)
24-bit organizational identifier that is administered by the IEEE

Note 1 to entry: See the IEEE Identifier Guidelines referenced in Annex M.

Note 2 to entry: The IEEE defines AOI values that are not 24-bits. Only 24-bit AOI values are used by this standard.

Note 3 to entry: AOI values are available from the IEEE-SA Registration Authority
(see https://standards.ieee.org/products-services/regauth/index.html).

3.1.81 IEEE Extended Local Identifiers (ELI)
set of identifiers that the IEEE defines to have a local scope

Note 1 to entry: See the IEEE Identifier Guidelines referenced in Annex M.

Note 2 to entry: The AOI values that are used to generate ELIs are provided at the discretion of the IEEE-SA Registration Authority.

Note 3 to entry: If the methods used for generating ELIs are the same as the methods used for generating EUIs, excepting only the AOI provided by the IEEE-SA Registration Authority, then ELIs are globally unique with respect to each other and globally unique with respect to other EUIs, except in the cases where those ELIs are used in MAC addresses.

Note 4 to entry: This standard references ELI-48s and ELI-64s.

3.1.82 IEEE Extended Unique Identifiers (EUI)
set of identifiers that the IEEE defines to have a globally unique scope

Note 1 to entry: See the IEEE Identifier Guidelines referenced in Annex M.

Note 2 to entry: The AOI values that are used to generate EUIs are provided at the discretion of the IEEE-SA Registration Authority.

Note 3 to entry: This standard references EUI-48s and EUI-64s.

3.1.83 IEEE-SA Registration Authority
provider of worldwide unique values for AOIs, ELI-48s, ELI-64s, EUI-48s, and EUI-64s

Note 1 to entry: The IEEE-SA Registration Authority also defines the formats for AOIs, ELI-48s, ELI-64s, EUI-48s, EUI-64s.

Note 2 to entry: See https://standards.ieee.org/products-services/regauth/index.html.

3.1.84 Infinite buffer
amount of buffer available at the Sequence Recipient is unlimited at the FC-2V sublevel

3.1.85 Information Category
category to which the frame payload belongs (e.g., Solicited Data, Unsolicited Data, Solicited Control, and Unsolicited Control) (see 12.3.3)

3.1.86 Information Unit
organized collection of data specified by an upper level to be transferred as a single Sequence by FC-2V

3.1.87 initial relative offset
relative offset value specified at the sending end by an upper level for a given Information Unit and used by the sending FC-2V in the first frame of that Information Unit (see 21)

3.1.88 Internet Protocol
protocol for communicating data packets between identified endpoints on a multipoint network (see RFC 791, RFC 2373, RFC 2460)

3.1.89 IP address
identifier of an endpoint in Internet Protocol

3.1.90 lane
pair of unidirectional transmission media (e.g., fibre, copper) transmitting in opposite directions and their associated transmitters and receivers in a link of two or more pairs

3.1.91 link
one or more pairs of unidirectional fibres transmitting in opposite directions and their associated transmitters and receivers

3.1.92 Link-by-link ESP_Header
ESP_Header processing applied to a frame at the transmitting end of a link and removed at the receiving end of the link (see 14.3.3 and 14.3.4)

3.1.93 Link Control Facility (LCF)
hardware facility that attaches to an end of a link and manages transmission and reception of data (see 4.4)

3.1.94 local Fx_Port
Fx_Port to which an Nx_Port is directly attached by a link or an Arbitrated Loop (see 4.4)

3.1.95 Low Power Idle (LPI)
primitive signal sent in place of Idle which indicates that the transmitter is operating in, or wishes to operate in Low Power mode (see 10)

3.1.96 LPI Mode
link state in which the link is operating or wishing to operate in lower power mode by sending LPI (see 10.6)

3.1.97 L_Port
FC_Port that contains Arbitrated Loop functions associated with Arbitrated Loop topology (see FC-AL-2)

3.1.98 Multiplexer
entity that provides the functions of the FC-2M sublevel

3.1.99 Name_Identifier
value used to identify a Fibre Channel entity (see 18)

3.1.100 Network_Address_Authority (NAA)
organization that administers network addresses

Note 1 to entry: The IEEE-SA Registration Authority is an NAA that clause 18 references for some Name_Identifiers and the constituents of other Name_Identifiers.
See https://standards.ieee.org/products-services/regauth/index.html.

3.1.101 Network_Address_Authority identifier
four-bit identifier defined in some Name_Identifiers to indicate an NAA (see 18)

3.1.102 NL_Port
Nx_Port communicating through a PN_Port that is operating a Loop Port State Machine (see FC-AL-2)

Note 1 to entry: Without the qualifier "Public" or "Private," an NL_Port is assumed to be a Public NL_Port.

3.1.103 node
collection of one or more Nx_Ports controlled by a level above FC-2 (see 4.3)

3.1.104 Node_Name
Name_Identifier associated with a node (see 18 and FC-LS-4)

3.1.105 N_Port
Nx_Port communicating through a PN_Port that is not operating a Loop Port State Machine (see FC-AL-2)

Note 1 to entry: Services operating at well-known addresses are considered to be N_Ports (see 12.4.2).

3.1.106 N_Port_ID
address identifier of an Nx_Port

3.1.107 N_Port_ID Virtualization (NPIV)
ability of an F_Port or a PN_Port to support more than one VN_Port (see 4.3)

3.1.108 N_Port_Name
Name_Identifier associated with an Nx_Port (see 18 and FC-LS-4)

3.1.109 Nx_Port
end point for Fibre Channel frame communication, having a distinct address identifier and Name_Identifier,

providing an independent set of FC-2V functions to higher levels, and having the ability to act as an Originator, a Responder, or both

3.1.110 open
period of time starting when a Sequence or an Exchange is initiated until that Sequence or Exchange is normally or abnormally terminated (see 19.7.2)

3.1.111 optical module
device which converts between one or more electrical and optical interfaces; on an electrical interface, identifies the port connected to a Host Electrical Transceiver, and on an optical interface, identifies the port connected to a second module (see FC-PI-x)

3.1.112 Ordered Set
pattern in encoded data sent or received by an FC_Port that, when decoded, communicates a Special Function rather than a word (see 5)

3.1.113 Originator
logical function associated with an Nx_Port responsible for originating an Exchange

3.1.114 Originator Exchange_ID (OX_ID)
identifier assigned by an Originator to identify an Exchange (see 4.10.4.2)

3.1.115 payload
contents of the Data_Field of a frame, excluding Optional Headers and fill bytes, if present (see table 33, and 11, 14, and 15.2)

3.1.116 PE_Port
LCF within the Fabric that attaches to another PE_Port or to a B_Port through a link (see FC-SW-7)

3.1.117 PF_Port
LCF within a Fabric that attaches to a PN_Port through a link (see FC-SW-7)

3.1.118 Platform
container for one or more nodes and one or more LCFs

Note 1 to entry: Additional characteristics of a Platform are specified in FC-GS-9.

3.1.119 PN_Port
LCF that supports only Nx_Ports (see 4.3)

3.1.120 Policy
rule used to determine how frames not received are handled during error recovery (see 22.5.4.3)

3.1.121 Port VF_ID
configurable VF_ID that is associated with any untagged frame received by a VF capable PN_Port or F_Port (see 13.3.2)

3.1.122 Primitive Sequence
Ordered Set transmitted repeatedly and continuously until a specified response is received (see 5.2.7.5 and 5.3.7.3)

3.1.123 Primitive Signal
Special Function for which each instance has meaning independent of neighboring Special Functions (e.g., an Idle or R_RDY) (see 5.2.7.3 and 5.3.7.2)

3.1.124 Private NL_Port
NL_Port that does not attempt a Fabric Login and does not transmit OPN(00,x) (see FC-AL-2)

3.1.125 Public NL_Port
NL_Port that attempts a Fabric Login (see FC-AL-2)

3.1.126 Quality of Service (QoS)
set of frame delivery characteristics (e.g., bandwidth and latency) and/or policies (e.g., priority for resources) that a Fabric may attempt or guarantee for an identified set of frames

3.1.127 random relative offset
relationship specified between relative offset values contained in frame (n) and frame (n+1) of an Information Category within a single Sequence

Note 1 to entry: For a given Information Category I within a single Sequence, initial relative offset (RO_I) value for a frame (n+1) is unrelated to that of the previous frame (n) (see 21).

3.1.128 receiver
portion of a LCF dedicated to receiving an encoded bit stream from a fibre, converting this bit stream into Transmission Words, and decoding these Transmission Words using the rules specified by this standard (see 5)

3.1.129 Recovery_Qualifier
composite of S_ID, D_ID, OX_ID and RX_ID in combination with a range of SEQ_CNT values (low and high) that identifies frames to be discarded in certain recovery processes (see 16.3.2.2.4)

3.1.130 relative offset
displacement, expressed in bytes, of the first byte of a payload related to an upper level defined origin for a given Information Category (see 21)

3.1.131 relative offset space
virtual address space defined by the sending upper level for a set of information carried in one or more information units

3.1.132 remote Fx_Port
with regards to an Nx_Port that is communicating through a Fabric to a remote Nx_Port, the Fx_Port to which the remote Nx_Port is directly attached (see 4.4)

3.1.133 Responder
logical function in an Nx_Port responsible for supporting the Exchange initiated by the Originator in another Nx_Port

3.1.134 Responder Exchange_ID (RX_ID)
identifier assigned by a Responder to identify an Exchange and meaningful only to the Responder

3.1.135 run length
number of consecutive identical bits in the transmitted signal (e.g., the pattern 0011111010b has a maximum run length of five and a minimum run length of one) (see 5.2.3)

3.1.136 running disparity
binary value indicating the cumulative encoded signal unbalance between the one and zero signal state of all Transmission Characters since Transmission Word Synchronization was achieved using 8B/10B encoding (see 5.2.4)

3.1.137 scrambling
mathematical transformation of the bits within data by application of Frame Scrambling (see 11.3.6) or 64B/66B encoding (see 5.3)

3.1.138 Sequence
set of one or more Data frames with a common Sequence_ID (SEQ_ID), transmitted unidirectionally from one Nx_Port to another Nx_Port with a corresponding response, if applicable, transmitted in response to each Data frame (see 19)

3.1.139 Sequence_ID (SEQ_ID)
identifier used to identify a Sequence (see 19)

3.1.140 Sequence Initiator
Nx_Port that initiates a Sequence and transmits Data frames to the destination Nx_Port (see 19)

3.1.141 Sequence_Qualifier
composite of S_ID, D_ID, OX_ID, RX_ID, and SEQ_ID, used to uniquely identify open Sequences (see 19.7.1)

3.1.142 Sequence Recipient
Nx_Port that receives Data frames from the Sequence Initiator and, if applicable, transmits responses (i.e., Link_Control frames) to the Sequence Initiator (see 19)

3.1.143 Sequence Status Block
logical construct that tracks the status of a Sequence

3.1.144 Signal Failure
condition in which an FC_Port capable of the speed negotiation procedure shall initiate that procedure (see 8.2)

3.1.145 Small Computer System Interface (SCSI)
standard interface to storage devices, comprising an architecture, multiple device command sets, and multiple transport protocols (see SAM-5)

3.1.146 Source_Identifier (S_ID)
address identifier used to indicate the source Nx_Port of the transmitted frame (see 12.4.4)

3.1.147 source Nx_Port
Nx_Port where a frame is originated

3.1.148 special character
8B/10B Transmission Character (see 5.2) considered valid by the transmission code but not equated to a data byte

3.1.149 special code
code that, when encoded using the rules specified by the 8B/10B transmission code, results in a special character

Note 1 to entry: Special codes are typically associated with control signals related to protocol management (e.g., K28.5) (see 5.2.2).

3.1.150 Special Function
link control operation supporting a function (e.g., link initialization, frame delimiting, and interframe fill) (see 5) that is communicated by Ordered Sets rather than by frame content

3.1.151 streamed Sequence
new sequence initiated by a Sequence Initiator in any class of service for an Exchange while it already has Sequences Open for that Exchange (see 19)

3.1.152 storage device
device that is capable of non-volatile data storage (e.g., disk device, tape device, disk array device, tape array device)

3.1.153 Switch
Fabric element conforming to the Fibre Channel Switch Fabric standard (see FC-SW-7)

3.1.154 synchronization
receiver identification of a Transmission Word boundary (see 6)

3.1.155 topology
communication infrastructure that provides Fibre Channel communication among a set of PN_Ports (e.g., a Fabric, an Arbitrated Loop, or a combination of the two)

3.1.156 Training Frame
element of a Transmitter Training Signal that communicates training information from the recipient of a Transmitter Training Signal to the sender of a Transmitter Training Signal (see 5.6.2)

3.1.157 Training Pattern
element of a Transmitter Training Signal that allows a receiver to evaluate the ability to achieve reliable Fibre Channel communication across the link on which the Training Pattern is sent (see 5.6.3)

3.1.158 Transmission Character
valid or invalid 8B/10B encoded character transmitted across a physical interface specified by FC-0

3.1.159 transmission code
means of encoding data and Special Functions to enhance their transmission characteristics (see 5)

3.1.160 Transmission Word
smallest unit of encoded information produced by a transmission code (see 5)

3.1.161 transmitter
portion of a LCF dedicated to converting words and Special Functions into Transmission Words using the rules specified by the transmission code, converting these Transmission Words into a bit stream, and transmitting this bit stream onto the transmission medium (optical or electrical)

3.1.162 Transmitter Training Signal
transmission code that enables active feedback from a receiver to a transmitter to assist in adapting the transmitter to the characteristics of the link that connects them (see 5.6)

3.1.163 Training Unit Interval (TUI)
nominal duration of a single transmission bit (see Unit Interval in FC-PI-x)

3.1.164 Unrecognized Ordered Set
Ordered Set (see 5.2.7.1) that is not defined to have meaning by this standard, but that may be defined by other standards (e.g., FC-AL-2)

3.1.165 upper level
level above FC-2

3.1.166 Upper Level Protocol (ULP)
protocol user of FC-4 (see 4)

3.1.167 valid frame
frame received with a valid SOF, a valid EOF, valid data characters, and proper CRC of the Frame_Header and Data_Field (see 11)

3.1.168 VFT_Header
Extended_Header that identifies the Virtual Fabric to which a frame belongs (see 13.3)

3.1.169 VFT Tagging PF_Port
PF_Port operating with a Multiplexer that has enabled processing of Virtual Fabric Tagging Headers (see 13.3)

3.1.170 VFT Tagging PN_Port
PN_Port operating with a Multiplexer that has enabled processing of Virtual Fabric Tagging Headers (see 13.3)

3.1.171 Virtual Fabric (VF)
Fabric composed of partitions of Switches and N_Ports having a single Fabric management domain, a single set of Generic Services, and independence from all other Virtual Fabrics (e.g., independent address space) (see FC-SW-7)

3.1.172 Virtual Fabric Identifier (VF_ID)
value that uniquely identifies a Virtual Fabric among all the Virtual Fabrics that share a set of Switches and N_Ports (see FC-SW-7)

3.1.173 Virtual Fabric Tagging Header (VFT_Header)
Extended_Header that contains information to associate a frame to a specific Virtual Fabric (see 13.3)

3.1.174 VN_Port
instance of the FC-2V sublevel

Note 1 to entry: Synonymous with N_Port.

Note 2 to entry: VN_Port is used when it is desired to emphasize support for multiple Nx_Ports on a single Multiplexer (e.g., via a single PN_Port).

3.1.175 vnode
synonymous with node

3.1.176 well-known addresses
set of address identifiers defined in this standard to access Fabric and other functions (e.g., a name server) (see 12.4)

3.1.177 word
string of four contiguous bytes within an unencoded frame occurring on boundaries that are zero modulo 4 from a specified reference

3.1.178 Worldwide_Name
Name_Identifier that is worldwide unique (see 18)

3.2 Editorial conventions

In this standard, a number of conditions, mechanisms, sequences, parameters, events, states, or similar terms are printed with the first letter of each word in upper-case and the rest lower-case (e.g., Exchange, Sequence). Any lower case uses of these words have the normal technical English meanings.

An alphabetic list (e.g., a, b, c) of items indicate the items in the list are unordered. A numeric list (e.g., 1, 2, 3) of items indicate the items in the list are ordered (i.e., item 1 shall occur or complete before item 2).

In case of any conflict between figures, tables, and text, the text takes precedence. Exceptions to this convention are indicated in the appropriate sections.

In all of the figures, tables, and text of this document, the most significant bit of a binary quantity is shown on the left side. Exceptions to this convention are indicated in the appropriate sections.

In the various ladder diagrams that show a sequence of events, the vertical axis (i.e., up and down the page) shows time from top to bottom.

The ISO/British convention of decimal number representation is used in this standard. Numbers may be separated by single spaces into groups of three digits counting from the decimal position, and a period is used as the decimal marker. A comparison of the ISO/British, ISO/French, and American conventions is shown in table 1.

Table 1 - Comparison of numbering conventions

ISO/British	ISO/French	American
0.6	0,6	0.6
3.14159265	3,141 592 65	3.14159265
1 000	1 000	1,000
1 323 462.9	1 323 462,9	1,323,462.9

Numbers that are not immediately followed by lower-case b or h are decimal values (e.g., 25).

A sequence of digits 0 or 1 immediately followed by lower-case b (e.g., 0101b) is a binary value. Spaces may be included in binary values to delineate byte or field boundaries (e.g., 01011 010b).

A sequence of digits and/or upper case letters A through F (i.e., a sequence of hexadecimal digits) immediately followed by lower-case h (e.g., FA23h) is a hexadecimal value. Spaces may be included in hexadecimal values to delineate byte or field boundaries (e.g., FD 8C FA 23h). When X or Y is used in a hexadecimal notation, it represents a single hexadecimal digit.

3.3 State machines

3.3.1 Overview

The operation of a protocol or a function may be described by a state machine. The models presented by state machines are intended as the primary specifications of functional behavior to be provided. However, it is important to distinguish between a model and a real implementation. The models are optimized for simplicity and clarity of presentation, while any realistic implementation may place heavier emphasis on efficiency and suitability to a particular implementation technology. It is functional behavior that is specified by this standard, not internal structure. The internal details of a state machine model are useful only to the extent that they specify the external behavior clearly and precisely.

The specification of a state machine includes the conditions under which it is started, and may include conditions under which it completes.

Multiple instances of the same state machine may operate concurrently.

3.3.2 States

Each state machine consists of a group of mutually exclusive states, each of which:

1) performs a set of actions on entry;
2) performs a set of ongoing actions continually while in the state; and
3) upon specified conditions, transitions to another state.

Only one state of a state machine is active at any given time.

The actions on entry to states are immediate and atomic (i.e., uninterruptible). When a state has performed all its specified entry actions one time, the state then continuously performs its ongoing actions, concurrently evaluating its exit conditions When the conditions for any of its exits is satisfied, control passes through a transition to the next state. No actions are taken outside of any state.

3.3.3 State variables

State variables carry information among the states within their scope. A variable may be within the scope of the states of a machine or of a set of related machines. Variables have no default values. Their values are explicitly set before they are first used, and retain their values until explicitly set again, or until their scope is completed.

3.3.4 State timers

State timers may limit the amount of time in a state or set of states within their scope. A timer may be within the scope of the states of a machine or of a set of related machines. An expiration value range is specified for each timer. A timer is reset and starts monitoring elapsed time upon entering a state that includes an action to start the timer. A timer expires at some elapsed time greater than the minimum value of its expiration range and less than the maximum value of its expiration range. A timer that has expired remains expired until the timer is reset or its scope completes. A timer is reset and stops counting upon entering a state that includes an action to stop the timer or when the scope of the timer completes.

3.3.5 State transitions

The action performed in a state machine may change by transitions from one state to another. Transitions may be unconditional, or may not occur until one or more conditions are present. A transition takes place immediately upon its conditions, if any, becoming true. The following terms are examples of transition conditions:

a) a boolean expression on variables is true;
b) expiration of a timer; or
c) an external event is detected (e.g., reception of a message).

3.3.6 State diagram conventions

A state machine may be described by a state diagram (see figure 1). When apparent conflicts between normative text and state diagrams arise, the normative text shall take precedence. However, if an explicit description in the state diagram has no parallel in the normative text, the description in the state diagram is normative.

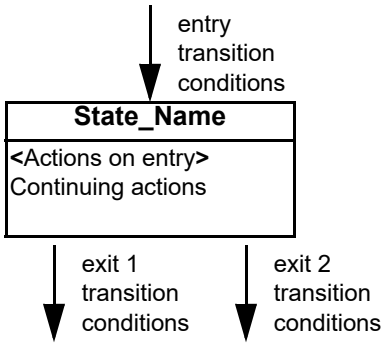

Figure 1 - State diagram notation example

Each state that the state machine is able to assume is represented by a rectangle. These are divided into two parts by a horizontal line. In the upper part the state is identified by a state name. The lower part contains the actions conducted by the state while it is active. Actions are described by short phrases.

All permissible transitions between the states of a function are represented graphically by arrows between them. Labels on transitions are conditions that shall be fulfilled before the transition is taken. A transition may also be labeled as unconditional. Conditions are described by short phrases.

Any arrow with no source block represents a global transition. Global transitions are evaluated continuously whenever any state is evaluating its exit conditions. When a global transition becomes true, it supersedes all other transitions, including unconditional transitions, returning control to the block to which the global transition arrow points.

3.4 Abbreviations, acronyms, and symbols

3.4.1 Acronyms and other abbreviations

64B/66B	A transmission code used in Fibre Channel (see 5.3)
8B/10B	A transmission code used in Fibre Channel (see 5.2)
ABTS	Abort Sequence
ABTS-LS	ABTS Basic Link Service with the Parameter field bit 0 set to zero (see 16.3.2.1)
ACK	Acknowledgement
ADVC	Advise Credit
AL_PA	Arbitrated Loop Physical Address
AOI	Administered Organizational Identifier
BA_ACC	Basic Accept
BB_Credit	buffer-to-buffer Credit
BB_Credit_CNT	buffer-to-buffer Credit_Count
BB_SCs	buffer-to-buffer State Change (SOF)
BB_SCr	buffer-to-buffer State Change (R_RDY)
BB_SC_N	buffer-to-buffer State Change Number
BSY	busy
Credit_CNT	Credit_Count
CRC	Cyclic Redundancy Check (see 11.4.5)
DF_CTL	Data_Field Control
D_ID	Destination_Identifier
DSCP	Differentiated Services Code Point
E_D_TOV	Error_Detect_Timeout value
EE_Credit	End-to-end Credit
EE_Credit_CNT	End-to-end Credit_Count
ELI-48	Extended Local Identifier (48-bits)
ELI-64	Extended Local Identifier (64-bits)
ELS	Extended Link Service
EOF	End-of-Frame
ESB	Exchange Status Block
ESTC	Estimate Credit
ESTS	Establish Streaming
EUI-48	Extended Unique Identifier
EUI-64	Extended Unique Identifier
F_BSY	Fabric_Port_Busy
F_BSY(DF)	F_BSY response to a Data frame
F_BSY(LC)	F_BSY response to any Link_Control except P_BSY
FC	Fibre Channel
FC-0	FC-0 level
FC-1	FC-1 level
FC-2	FC-2 level
FC-2M	FC-2 Multiplexer sublevel
FC-2P	FC-2 Physical sublevel
FC-2V	FC-2 Virtual sublevel
FC-3	FC-3 level
FC-4	FC-4 level
FCP	Fibre Channel Protocol
FC-PI-x	Fibre Channel Physical Layer standards (see FC-PI-2, FC-PI-3, FC-PI-4, FC-PI-5, FC-PI-6, FC-PI-6P, FC-PI-7, FC-PI-7P and 10GFC)

FCS	Frame Check Sequence
F_CTL	Frame Control
FEC	Forward Error Correction
FLOGI	Fabric Login
F_RJT	Fabric Reject
HBA	Host Bus Adapter
hex	hexadecimal notation
IEEE	Institute of Electrical and Electronics Engineers
IP	Internet Protocol
IPv4	Internet Protocol version 4
IPv6	Internet Protocol version 6
LCF	Link Control Facility
LCR	Link Credit Reset
LESB	Link Error Status Block (see 22.4.8)
LF1	NOS Receive State
LF2	NOS Transmit State
LILP	Loop Initialization Loop Position
LISA	Loop Initialization Soft Assigned
LOGO	Logout
LPI	Low Power Idle
LR	Link Reset Primitive Sequence
LR1	LR Transmit State
LR2	LR Receive State
LR3	LRR Receive State
LRR	Link Reset Response Primitive Sequence
LS_ACC	Link Service Accept
LS_Command	Link Service Command
LSN	Link Speed Negotiation (see clause 8)
m	Metre
MB	MegaByte
ms	Millisecond
µs	Microsecond
N/A	Not applicable
NAA	Network_Address_Authority
NOP	No Operation
NOS	Not_operational Primitive Sequence
NPIV	N_Port_ID Virtualization
ns	Nanosecond
ODP	Overlapping Data Protection (see 14.3.5)
OL1	OLS Transmit State
OL2	OLS Receive State
OL3	Wait for OLS State
OLS	Offline Primitive Sequence
OX_ID	Originator Exchange_ID
P_BSY	N_Port_Busy
PDISC	Discover N_Port Service Parameters
PLOGI	N_Port Login
PPM	Parts per Million
P_RJT	N_Port_Reject
PRLI	Process Login
PRLO	Process Logout
QoS	Quality of Service
R_A_TOV	Resource_Allocation_Timeout value
R_CTL	Routing Control

RJT	Reject
RLIR	Registered Link Incident Report
RLS	Read Link Error Status Block
RNC	Report node Capability
RO	Relative offset
R_RDY	Receiver_Ready
R_T_TOV	Receiver_Transmitter_Timeout value
RTV	Read Timeout Value
Rx	Receiver
RX_ID	Responder Exchange_ID
s	Second
SBCCS	Single Byte Command Code Sets
SCR	State Change Registration
SCSI	Small Computer System Interface
SEQ_CNT	Sequence Count
SEQ_ID	Sequence_ID
S_ID	Source_Identifier
SOF	Start-of-Frame
SSB	Sequence Status Block
Tx	Transmitter
TYPE	Data structure type
ULP	Upper Level Protocol
TUI	Training Unit Interval (see 5.6)
VC_RDY	Virtual Circuit Ready
VF	Virtual Fabric
VF_ID	Virtual Fabric Identifier
VFT_Header	Virtual Fabric Tagging Header
WWN	Worldwide_Name
X_ID	Exchange_Identifier
XOR	Mathematical modulo 2 addition applied bit by bit to the corresponding bits of two or more equal-length bit streams

3.4.2 Symbols

Unless indicated otherwise, the following symbols have the listed meaning.

•	Multiplication
•••	Ellipsis, aligned horizontally or vertically (i.e., items similar to those adjacent are omitted)
⊕	Mathematical modulo 2 addition applied bit by bit to the corresponding bits of two or more equal-length bit streams
||	Concatenation
µ	Micro (e.g., µm = micrometer)
L >>	Received from Link
±	Plus or minus
≠	Not Equal
≥	Greater than or equal
≤	Less than or equal
|	In a state diagram, logical exclusive or of two operands
&	In a state diagram, logical and of two operands

3.5 Keywords

3.5.1 expected: Used to describe the behavior of the hardware or software in the design models assumed by this standard. Other hardware and software design models may also be implemented.

3.5.2 invalid: Used to describe an illegal or unsupported bit, byte, word, field or code value. Receipt of an invalid bit, byte, word, field or code value shall be reported as error.

3.5.3 ignored: Used to describe a bit, byte, word, field or code value that shall not be examined by the receiving port. The bit, byte, word, field or code value has no meaning in the specified context.

3.5.4 mandatory: A keyword indicating an item that is required to be implemented as defined in this standard.

3.5.5 may: A keyword that indicates flexibility of choice with no implied preference (equivalent to “may or may not”).

3.5.6 may not: A keyword that indicates flexibility of choice with no implied preference (equivalent to “may or may not”).

3.5.7 meaningful: A control field or bit that shall be applicable and that shall be interpreted by the receiver.

3.5.8 not meaningful: A control field or bit that shall be ignored by the receiver.

3.5.9 obsolete: A keyword indicating that an item was defined in a prior Fibre Channel standard but has been removed from this standard.

3.5.10 optional: A keyword that describes features that are not required to be implemented by this standard. However, if an optional feature defined by this standard is implemented, then it shall be implemented as defined in this standard.

3.5.11 reserved: A keyword referring to bits, bytes, words, fields and code values that are set aside for future standardization. A reserved bit, byte, word or field shall be set to zero, or in accordance with a future extension to this standard. Recipients should not check reserved bits, bytes, words or fields for zero values. Receipt of reserved code values in defined fields shall be reported as an error.

3.5.12 restricted: A keyword referring to bits, bytes, words, and fields that are set aside for use in other standards. A restricted bit, byte, word, or field shall be treated as a reserved bit, byte, word or field for the purposes of the requirements defined in this standard.

3.5.13 shall: A keyword indicating a mandatory requirement. Designers are required to implement all such mandatory requirements to ensure interoperability with other products that conform to this standard. This standard prescribes no specific response by a component if it receives information that violates a mandatory behavior.

3.5.14 should: A keyword indicating flexibility of choice with a strongly preferred alternative; equivalent to the phrase “it is strongly recommended”.

3.5.15 should not: A keyword indicating flexibility of choice with a strongly preferred alternative; equivalent to the phrase “it is strongly recommended not to”.

3.5.16 vendor specific: Functions, code values, and bits not defined by this standard and set aside

for private usage between parties using this standard.

4 Structure and concepts

4.1 Introduction

This clause provides an overview of the structure, concepts, and mechanisms used in this standard. The following concepts are defined and described:

a) Functional levels (see 4.2);
b) Architectural components (see 4.3);
c) Physical model (see 4.4);
d) Communication models (see 4.5);
e) Interconnect topologies based on the presence or absence of a Fabric (see 4.6);
f) Classes of service provided by the Fabric and Nx_Ports (see 4.7);
g) General Fabric model (see 4.8);
h) Generic Services (see 4.9);
i) Building Blocks and their hierarchy (see 4.10);
j) Segmentation and reassembly (see 4.11); and
k) Error detection and recovery (see 4.12).

Fibre Channel (FC) is logically a bi-directional, point-to-point, serial data channel, structured for high performance capability. Fibre Channel may be implemented using any combination of the following three topologies:

a) a point-to-point link between two PN_Ports;
b) a set of PN_Ports interconnected by a switching network called a Fabric; and
c) a set of L_Ports interconnected with a loop topology as defined in FC-AL-2.

This standard provides a general transport vehicle for Upper Level Protocols (ULPs) (e.g., Small Computer System Interface (SCSI) command sets, Internet Protocol (IP), and others). Other ULPs may also use and share Fibre Channel, but such use is not defined as part of this standard.

The Fibre Channel protocol provides a range of implementation possibilities extending from minimum cost to maximum performance. The transmission medium is isolated from the control protocol so that each implementation may use a technology best suited to the environment of use.

Effective transfer rate achieved by a Fibre Channel configuration is a function of physical variants, the communication model, Payload size, fibre speed, class of service and overhead specified by this standard.

4.2 Functional levels

4.2.1 Overview

Fibre Channel is structured as a set of hierarchical functions as illustrated in figure 2. This standard specifies related functions FC-1, FC-2, and FC-3. Each of these functions is described as a level. FC-2 is further subdivided into sublevels FC-2P, FC-2M, and FC-2V. This standard does not restrict implementations to specific interfaces between these levels.

FC-2V and FC-3 are specified by this standard. FC-1, FC-2P, and FC-2M as specified by this standard may be used in any Fibre Channel standard, but shall be used for FC-0 levels specified in FC-PI-x and FC-BaseT. Extended Link Services are defined in FC-LS-4.

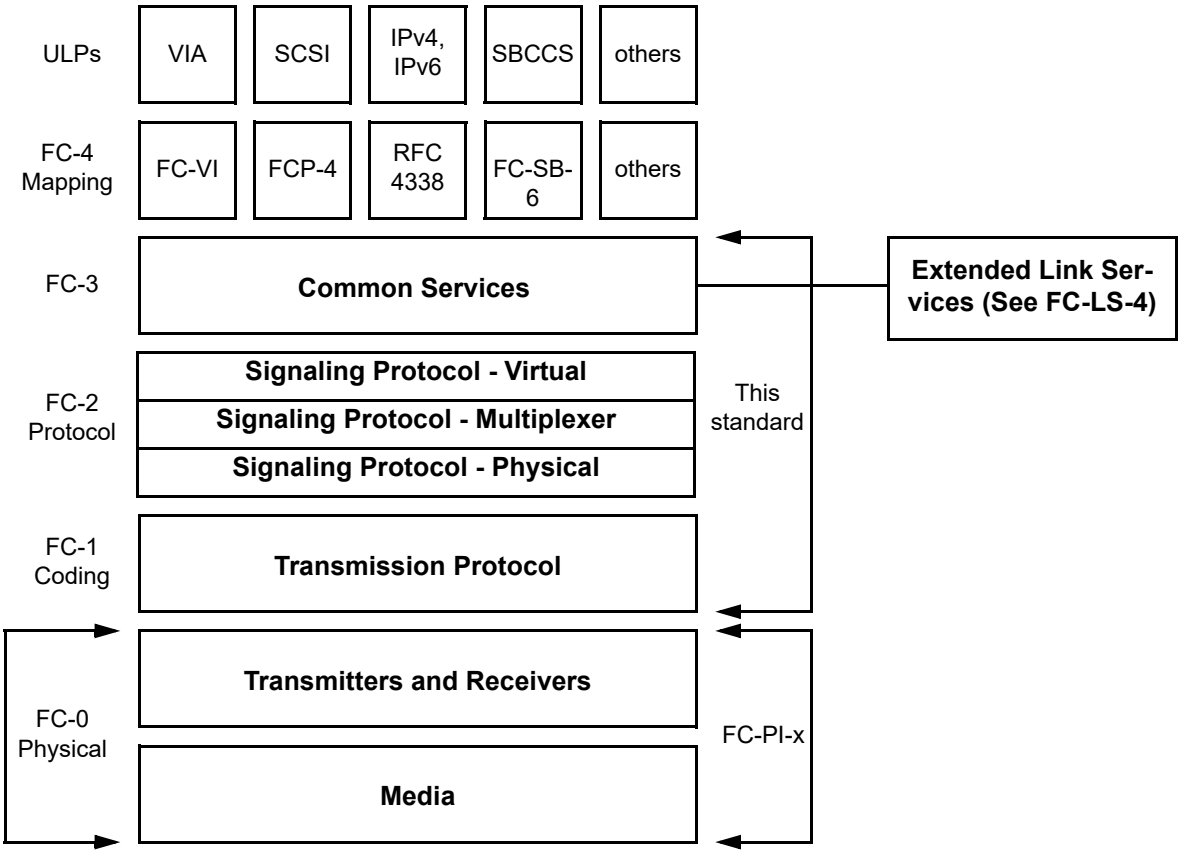

Figure 2 - Fibre Channel structure

4.2.2 FC-0 general description

The physical interface (FC-0) consists of transmission media, transmitters, and receivers and their interfaces. A variety of physical media, and associated drivers and receivers capable of operating at various speeds are specified by other standards (e.g., FC-PI-x, FC-BaseT) to address variations in cable plants.

4.2.3 FC-1 general description

FC-1 (see clause 5, clause 6, clause 7, clause 8, and clause 9) defines the transmission protocol that shall be used for FC-0 levels specified in FC-PI-x and FC-BaseT. It includes the serial encoding, decoding, and error control. Other standards that specify FC-0 levels may also specify an appropriate FC-1 level.

The Fibre Channel transmits information using either a 64B/66B transmission code or an adaptive 8B/10B transmission code. The encoding process results in the generation of Transmission Words.

Certain encoded bit patterns, referred to as Ordered Sets, are designated by this standard to have special meaning. Ordered Sets are used by the FC-2P sublevel specified by this standard to identify frame boundaries, transmit primitive function requests, and by the FC-1 level specified by this standard to maintain proper link transmission characteristics during periods of inactivity.

Transmitter and receiver behavior is specified via a set of states and their interrelationships. These states are divided into operational and not operational classes. Error monitoring capabilities and special operational modes are also defined for operational receivers and transmitters.

4.2.4 FC-2 general description

The FC-2 level serves as the transport mechanism of the Fibre Channel. The transported data is transparent to FC-2 and visible to FC-3 and above. FC-2 contains three sublevels: FC-2P (i.e., the FC-2 Physical sublevel), FC-2M (i.e., the FC-2 Multiplexer sublevel), and FC-2V (i.e., the FC-2 Virtual sublevel).

FC-2P specifies the rules and provides mechanisms that shall be used to transfer frames via a specific FC-1 level. This standard specifies an FC-2P (see 11.3, 20.4, and 24.4) that shall be used to transfer frames via the FC-1 that is specified by this standard. FC-2P functions specified in this standard include frame transmission and reception, buffer-to-buffer flow control, and clock synchronization by use of Primitive Signals.

FC-2M (see 11.4, 12.4, clause 13, and clause 23) specifies the addressing and functions used to route frames between a Link Control Facility and a VN_Port.

FC-2V (see 11.4, clause 12, clause 13, clause 14, clause 15, clause 17, clause 18, clause 19, 20.3, clause 21, and 24.3) defines functions and facilities that an Nx_Port may provide for use by an FC-4 level, regardless of the FC-1 that is used. FC-2V functions include several classes of service, frame content construction and analysis, Sequence disassembly and reassembly, Exchange management, and Name_Identifiers.

4.2.5 FC-3 general description

FC-3 provides a set of services that are common across multiple Nx_Ports of a node. FC-3 includes protocols for Basic Link Services (see clause 16), and Extended Link Services (see FC-LS-4). The Link Services represent a mandatory function required by FC-2.

4.2.6 FC-4 general description

FC-4 is the highest level in the Fibre Channel standards set. An FC-4 defines the mapping between the lower levels of the Fibre Channel and an Upper Level Protocol (e.g., the SCSI and SBCCS command sets, IP, and other Upper Level Protocols (ULPs)). Fibre Channel provides a method for supporting a number of Upper Level Protocols (ULPs).

4.3 Architectural components of nodes

A node is an administratively defined group of ULPs and Nx_Ports within a physical entity (i.e., a Platform). A Platform has a Platform Name (i.e., a Name_Identifier). See FC-GS-9 and clause 18. The equivalent term vnode may replace the term node in order to emphasize the possibility that multiple nodes may coexist within the same Platform. Each node has a Name_Identifier that enables it to be referenced by certain functions of a Fibre Channel environment (e.g., Name Server requests, see FC-GS-8). The architectural components associated with a node are:

a) a Platform, that contains one or more vnodes;
b) one or more vnodes, each of which identifies a collection of one or more ULPs and their FC-4 mappings, an FC-3 level, and one or more VN_Ports;
c) one or more ULPs, which are application protocols carried over Fibre Channel;
d) an FC-4 mapping for each ULP onto the FC-3 functions offered by the vnode and the FC-2 functions offered by each VN_Port;
e) one or more VN_Ports, each of which is an independent end point for Fibre Channel communication;
f) one or more Multiplexers, each of which routes frames between a set of VN_Ports and a set of PN_Ports; and
g) one or more PN_Ports, each of which is an LCF that operates a Fibre Channel link.

The relations among the architectural components and functional levels in a Fibre Channel node is illustrated in figure 3. Although figure 3 shows only vnodes and VN_Ports, the term vnode is interchangeable with the term node, and the term VN_Port is interchangeable with the terms:

a) Nx_Port;
b) in Fabric topologies, N_Port; and
c) in loop topologies, NL_Port.

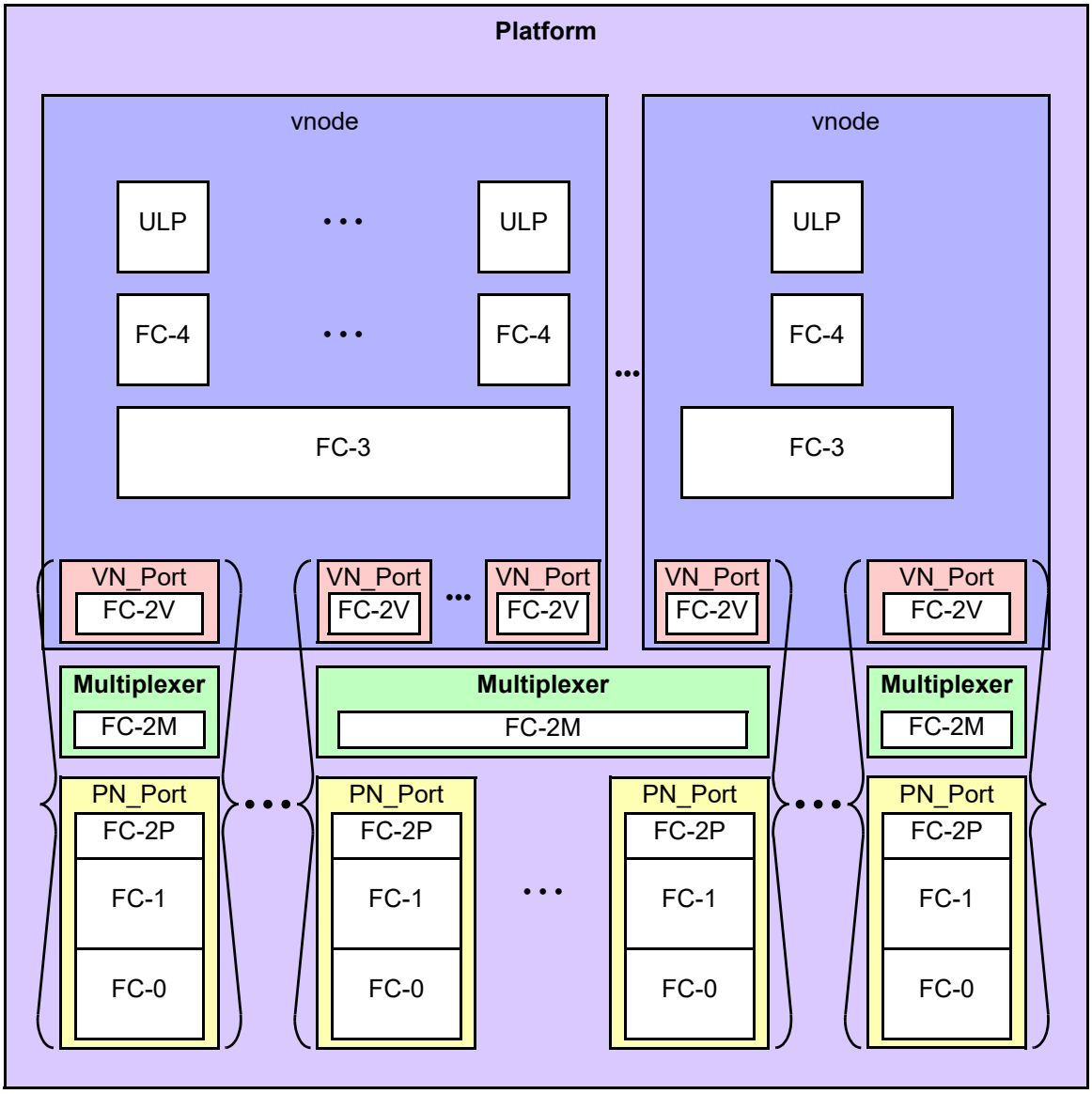

Figure 3 - Node components and functional levels model

4.4 Physical model

Figure 4 depicts the physical model presumed by this standard and illustrates the physical structure and components of the model. The Fibre Channel (FC) physically consists of a minimum of two PN_Ports, each associated with a Platform, interconnected by a pair of fibres - one outbound and the other inbound at each PN_Port. This pair of unidirectional fibres transmitting in opposite directions with their associated transmitters and receivers is referred to as a link. The link is used by the interconnected PN_Ports to perform data communication.

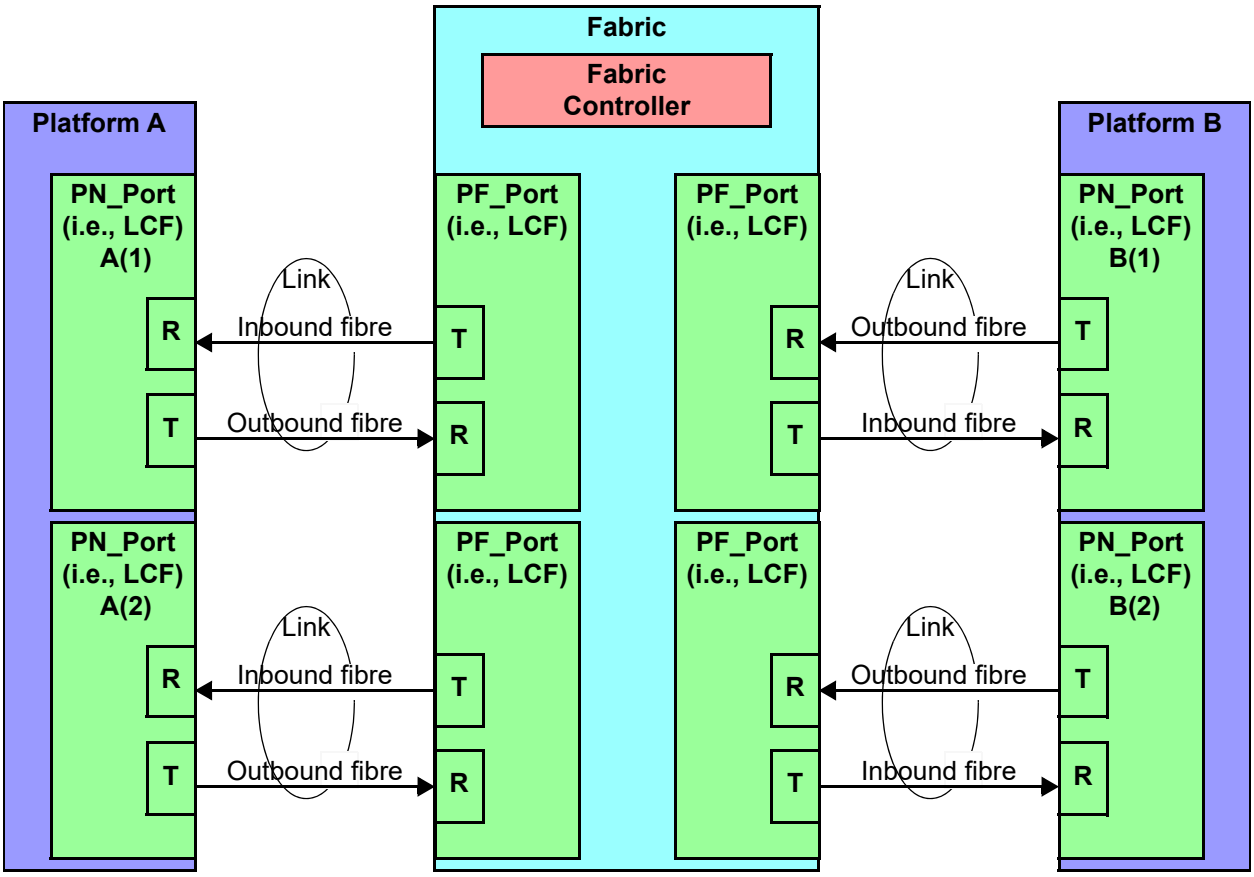

Legend:
T: Transmitter
R: Receiver
fibre: Any medium supported by Fibre Channel

Figure 4 - Physical model

Physical equipment (e.g., a processor, controller, or terminal) should be interconnected to other physical equipment through these links. Attached physical equipment comprises one or more Platforms and each Platform contains one or more PN_Ports, with each PN_Port being an LCF containing a transmitter and a receiver.

The physical model shown in Figure 4 is inherently capable of simultaneous bi-directional flow. A Fabric may be present between the PN_Ports and some Fabrics may not support this type of flow. From the perspective of a given PN_Port, for instance A(1) or B(1), its transmitter sends Data frames on the outbound fibre and its receiver receives the responses on the inbound fibre.

This structure provides flexible mechanisms for attached equipment to perform simultaneous data transfers in parallel.

The Link Control facility (LCF) is a hardware facility that attaches to each end of a link and manages transmission and reception of data. In a node, an LCF is a PN_Port. In a Fabric, an LCF attached to a PN_Port is a PF_Port.

4.5 Communication models

A PN_Port transmits Data frames as a result of transfer requests made by an upper level at its end and receives the Link_Control responses for those Data frames. A PN_Port receives Data frames from other PN_Ports and transmits the appropriate Link_Control responses for those frames to the proper PN_Ports.

A PN_Port may operate according to these communication models:

a) simplex operation is defined as a PN_Port transferring Data frames in one direction only, with Link_Control frames flowing in the opposite direction;
b) full-duplex operation is defined as a PN_Port simultaneously transmitting and receiving Data frames, with Link_Control frames flowing in both directions as well; or
c) half-duplex operation is defined as a PN_Port both transmitting and receiving data, but not simultaneously. Data frames and Link_Control frames flow in both directions, but the flow is limited, to a single direction at a time.

4.6 Topology

4.6.1 Types

Topologies are defined, based on the capability and the presence or absence of Fabric between the PN_Ports. There are three basic types:

a) Point-to-point topology;
b) Fabric topology; and
c) Arbitrated Loop topology.

The protocols specified herein are topology independent. However, attributes of the topology may restrict operation to certain communication models.

4.6.2 Point-to-point topology

The point-to-point topology is shown in figure 5, in which communication between PN_Ports occurs without the use of a Fabric.

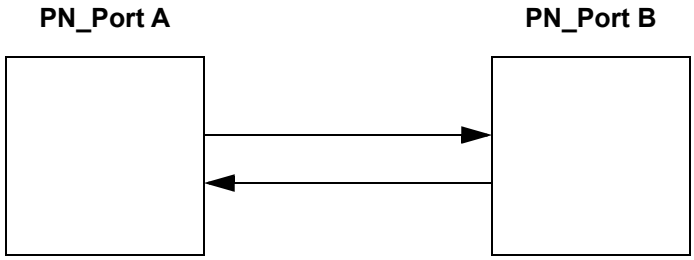

Figure 5 - Point-to-point topology

4.6.3 Fabric topology

The Fabric topology uses the D_ID embedded in the Frame_Header to route frames through a Fabric to the desired destination PN_Port. Figure 6 illustrates multiple PN_Ports interconnected by a Fabric.

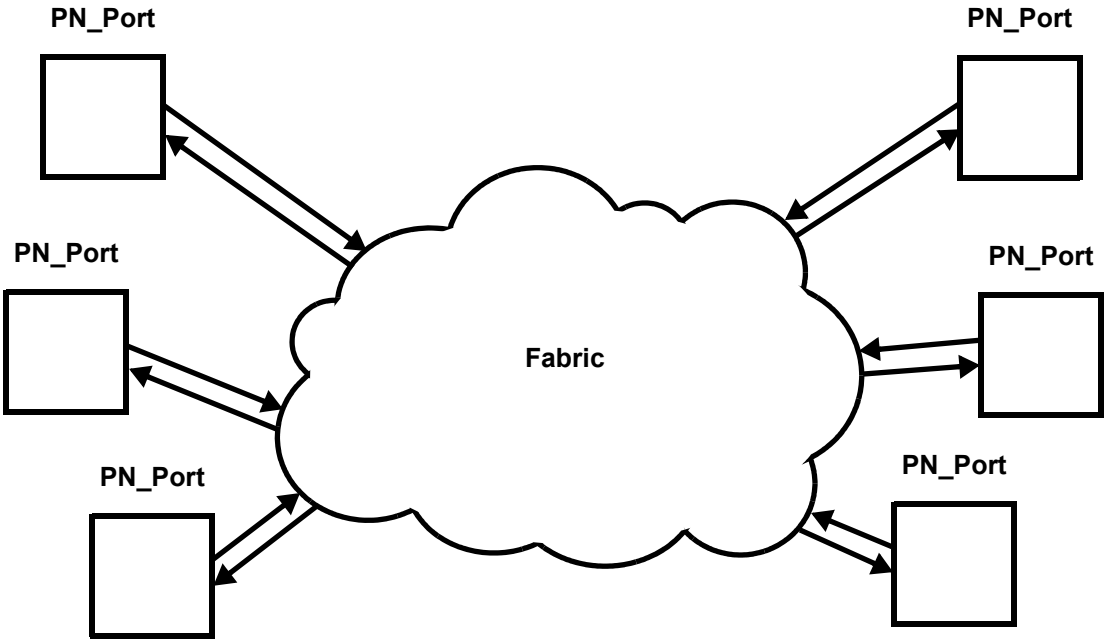

Figure 6 - Fabric topology

4.6.4 Arbitrated Loop topology

The Arbitrated Loop topology permits three or more L_Ports to communicate without the use of a Fabric, as in Fabric topology. The Arbitrated Loop supports a maximum of one point-to-point circuit at a time. When two L_Ports are communicating, the Arbitrated Loop topology supports simultaneous, symmetrical bi-directional flow.

Figure 7 illustrates two independent Arbitrated Loop configurations each with multiple L_Ports attached. Each line in the figure between L_Ports represents a single fibre. The first configuration shows an Arbitrated Loop composed only of L_Ports. The second configuration shows an Arbitrated Loop composed of one FL_Port and three L_Ports. In this topology, additional FC_Ports may be attached to the Switch.

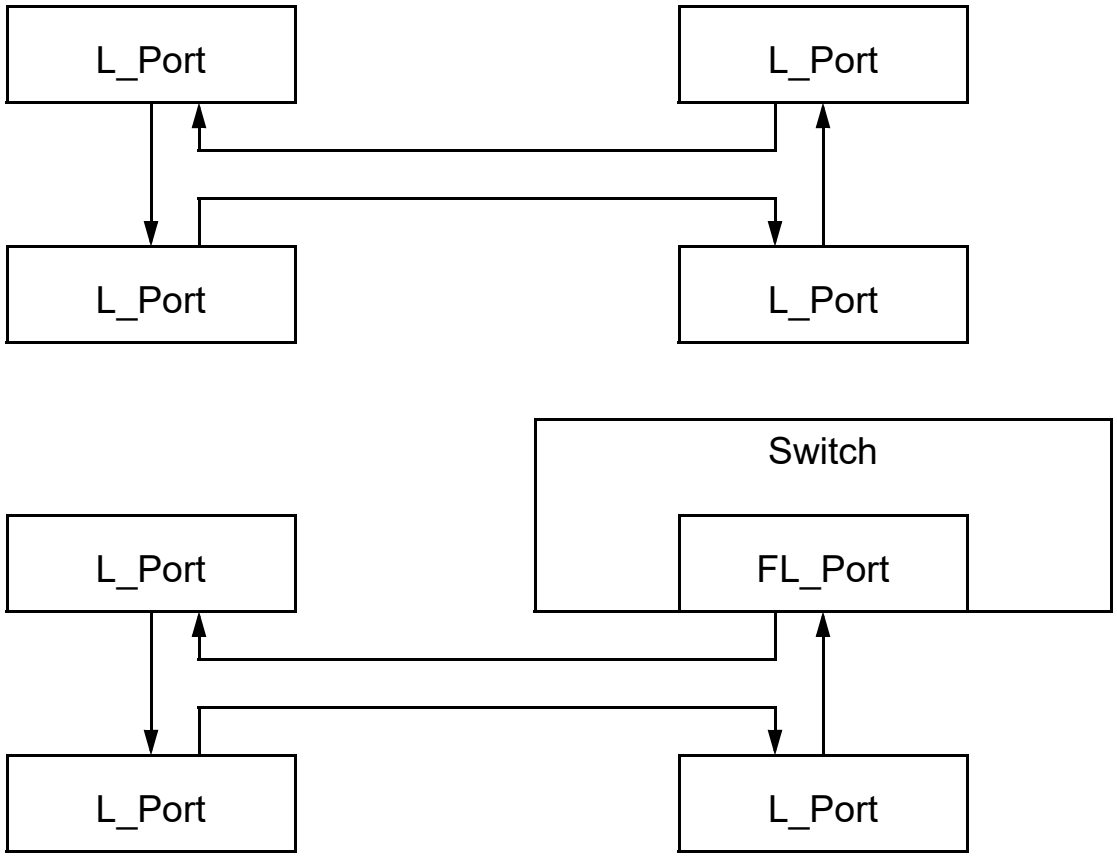

Figure 7 - Examples of the Arbitrated Loop topology

4.7 Classes of service

4.7.1 General

Classes of service are distinguished primarily by the level of delivery integrity required for an application. Classes of service are topology independent. If a Fabric is not present, the class of service is provided as a special case of point-to-point. FC_Ports are not required to support all classes of service.

4.7.2 Class 2 service - multiplex

Class 2 is a frame delivery service multiplexing frames at frame boundaries with frame acknowledgement (see 17.3).

The transmitter transmits Class 2 Data frames in a sequential order within a given Sequence. However the Fabric may not guarantee the order of delivery and frames may be delivered out of order.

The Fabric or the destination Nx_Port guarantees notification of delivery in the absence of link errors. In case of link errors, notification is not guaranteed since the S_ID may not be error free.

4.7.3 Class 3 service - datagram

Class 3 is a frame delivery service with the Fabric multiplexing frames at frame boundaries without frame acknowledgement (see 17.4).

Class 3 supports only unacknowledged delivery where the destination Nx_Port does not send any confirmation of Link_Control frames on receipt of valid Data frames. Any acknowledgement of Class 3 service is beyond the scope of this standard.

The transmitter transmits Class 3 Data frames in sequential order within a given Sequence. However, the Fabric may not guarantee the order of delivery and frames may be delivered out of order.

The Fabric is expected to make a best effort to deliver the frame to the intended destination and does not issue a busy or reject frame to the source Nx_Port if unable to deliver the frame.

4.7.4 Class F service - Fabric

Class F is a frame delivery service used only for communication between switches in a Fabric (see FC-SW-7).

4.8 General Fabric model

4.8.1 General

The primary function of the Fabric is to receive the frames from a source Nx_Port and route the frames to the destination Nx_Port whose address identifier is specified in the frames. Each Nx_Port is physically attached through a link to the Fabric. FC-2 specifies the protocol between the Fabric and the attached Nx_Ports. A Fabric is characterized by a single address space where every Nx_Port has a unique N_Port_ID.

A Fabric specifies the classes of service it supports in its Service Parameters (see FC-LS-4). Fabrics are allowed to provide the classes of service through equivalent mechanisms and/or functions. See FC-SW-7 for the details.

Figure 8 illustrates the general Fabric model. The model is conceptual and may provide the following major functions:

a) bi-directional Physical Fabric Ports (PF_Ports);
b) receive buffer;
c) frame delivery service; and
d) receive buffer queue management.

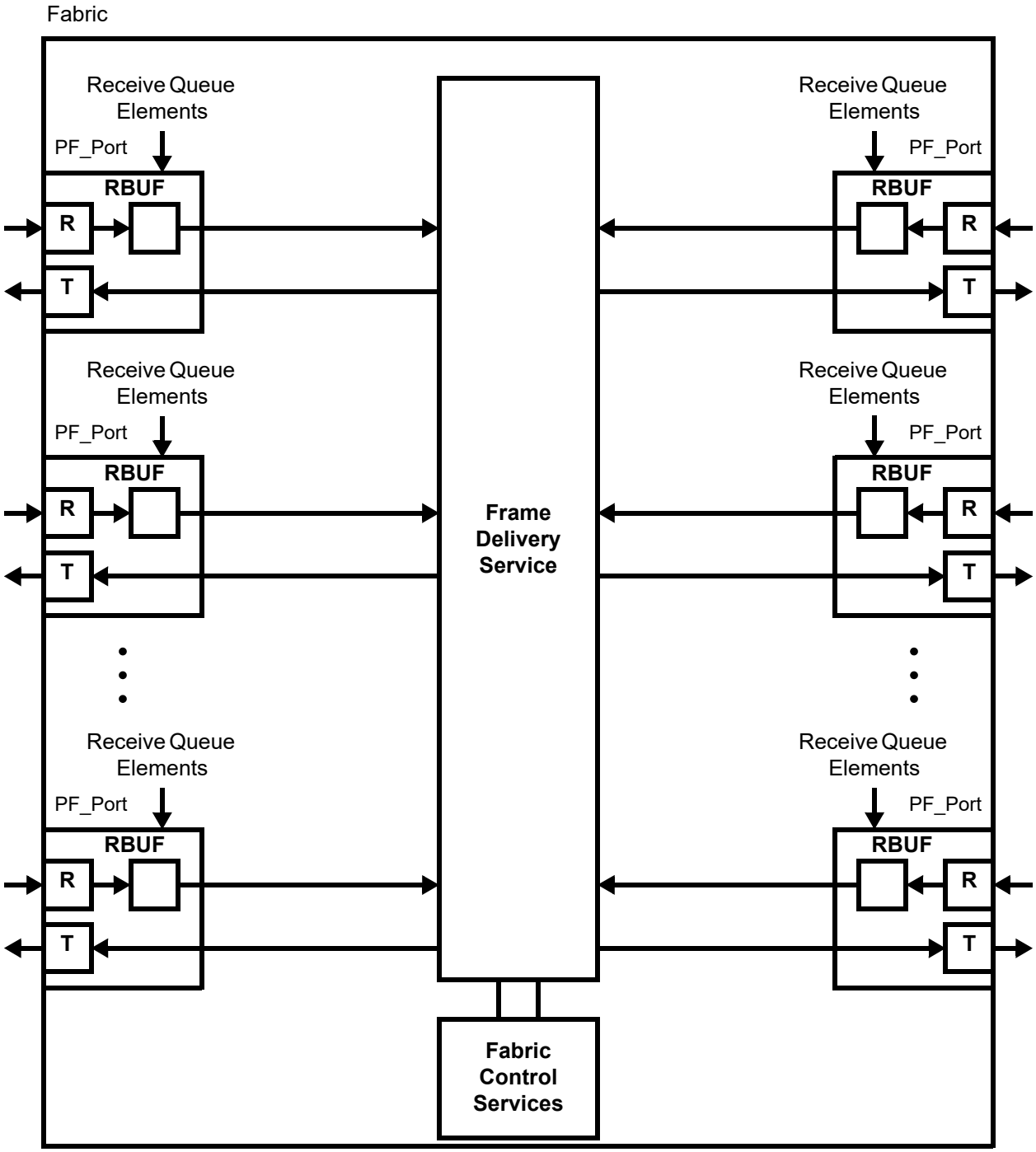

Legend:

	PF_Port:	Bidirectional PF_Port
	RBUF:	Receive Buffer
	R:	Receiver
	T:	Transmitter

Figure 8 - Informative general Fabric model

4.8.2 Fabric Ports (Fx_Ports)

The Fabric model contains two or more Fx_Ports. Each Fx_Port is attached to one or more Nx_Ports at one or more PN_Ports through a link. Each Fx_Port is bi-directional and supports one or more communication models. Frames are routed to the Fx_Port attached to the destination Nx_Port.

The receiving Fx_Port responds to the sending Nx_Port according to the FC-2 protocol. The Fabric may verify the validity of the frame as it passes through the Fabric (see 11.3.8.3 and 11.3.9.2).

An Fx_Port may contain receive buffers for the incoming frames. The maximum Data_Field size that the Fabric is able to handle for frames is determined during Login. One of the Fabric Service Parameters indicates the maximum Data_Field size for the entire Fabric (see FC-LS-4).

The Fabric routes the frame to the Fx_Port attached to the destination Nx_Port based on the value in the D_ID field embedded in the Frame_Header of the frame. The routing mechanisms within the Fabric are transparent to Nx_Ports and are not specified in this standard.

4.8.3 Frame delivery service

A frame delivery service multiplexes frames at frame boundaries. Frame delivery service does not guarantee full link bandwidth between communicating Nx_Ports.

The Fabric notifies the transmitting Nx_Port with a reason code embedded in a Link_Response frame, if it is unable to deliver a Class 2 frame. In the case of a Class 3 frame, the Fabric does not notify the transmitting Nx_Port.

If frames from multiple Nx_Ports are targeted for the same destination Nx_Port in Class 2 or Class 3, congestion of frames may occur within the Fabric. Management of this congestion is part of the frame delivery service and buffer-to-buffer flow control.

If any buffer-to-buffer flow control error occurs and as a result causes overflow (see 20.4), the Fabric logs the error and may discard the overflow frame without notification. Error logging is vendor specific.

4.9 Generic Services

Generic Services (e.g., Directory Service) may be provided in a Fibre Channel configuration to meet the needs of the configuration. Each of these services is addressed with an N_Port_ID for the Nx_Port providing the service or with a well-known address (see 12.4.2). These well-known addresses are recognized and routed to by the Fabric. These services may be centralized or distributed (see FC-GS-8).

4.10 Building Blocks

4.10.1 Building block hierarchy

The FC-2 building blocks are used in a hierarchical fashion, as illustrated in figure 9.

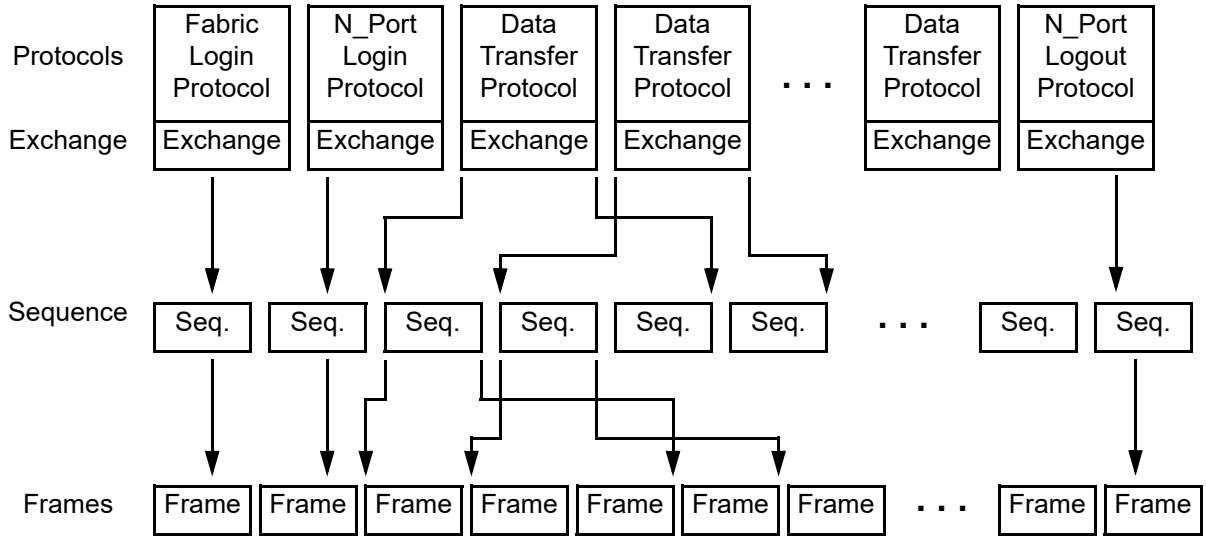

Figure 9 - FC-2 building block hierarchy

A Sequence is made up of one or more Data frames and if applicable, corresponding responses (see 19.7 and clause 15). An Exchange is made up of one or more Sequences flowing in a single direction from the Originator of the Exchange to the Responder or in both directions between the Originator and the Responder (see clause 19).

Prior to use by a ULP for its data transfer, Fibre Channel has to be setup for the operating environment. The Fibre Channel operating environment is setup by performing Fabric Login and N_Port Login (see FC-LS-4). Once these two Logins are performed, an FC-4 may start using Fibre Channel until one or both of these Logins are invalidated.

Each Login uses an Exchange as the mechanism to accomplish the login function. A data transfer is performed using an Exchange as the mechanism (see figure 9) with the related FC-4 translating the ULP protocol to FC-2 protocol.

4.10.2 Frame

Frames are based on a common frame format (see clause 11). Frames are categorized as Data frames and Link_Control frames (see clause 15). Data frames (see 15.2) are classified as

a) Link_Data frames;
b) Device_Data frames; and
c) Video_Data frames.

Link_Control frames (see 15.3) are classified as

a) Acknowledge (ACK) frames;
b) Link_Response (Busy and Reject) frames; and

c) Link_Control command frames.

Selective retransmission of frames for error recovery is not supported in this standard (see clause 22). However, an individual frame may be busied in Class 2 and the sender may later retransmit the busied frame (see 15.3.3.2) up to the ability of the sender to retry. The number of times the sender may retry is not specified in this standard.

4.10.3 Sequence

4.10.3.1 Introduction

A Sequence is a set of one or more related Data frames transmitted unidirectionally from one Nx_Port to another Nx_Port with corresponding Link_Control frames, if specified, transmitted in response. An Nx_Port that transmits a Sequence is referred to as the Sequence Initiator and the Nx_Port that receives the Sequence is referred to as the Sequence Recipient. Sequence rules are specified in 19.7.

Error recovery is performed on the Sequence boundary at the discretion of a level higher than FC-2. If a frame is not transmitted error free, and the error policy requires error recovery, the Sequence containing the frame may be retransmitted (see clause 22).

4.10.3.2 Sequence_Identifier (SEQ_ID)

The Sequence Initiator assigns to the Sequence a Sequence_Identifier (SEQ_ID). The Sequence Recipient uses the same SEQ_ID in its response frames. The Sequence Initiator at each of the communicating Nx_Ports assigns SEQ_IDs independent of the other.

4.10.3.3 Sequence Status Blocks

A Sequence Status Block (SSB) is a logical construct representing the content of the Sequence status information (see 19.9.2). It is used to track the progress of a Sequence at an Nx_Port on a frame by frame basis. A Sequence Initiator SSB and a Sequence Recipient SSB are used by the respective Nx_Ports to track the status of a given Sequence.

When a Sequence Initiator starts a Sequence, the Sequence Initiator allocates a SSB to be associated with the Sequence it has initiated. The Sequence Recipient subsequently allocates a SSB at its end, associated with the sequence that the Sequence Initiator has initiated. Both the Sequence Initiator and Sequence Recipient Nx_Ports track the status of the Sequence through the Sequence Initiator and the Sequence Recipient SSBs, respectively.

The maximum number of concurrent Sequences between two Nx_Ports is limited to the smaller of the number of SSBs available at these Nx_Ports. This value is established during N_Port Login through the Service Parameters (see FC-LS-4).

4.10.4 Exchange

4.10.4.1 Introduction

An Exchange is composed of one or more non-concurrent Sequences (see clause 19). An Exchange may be unidirectional or bi-directional. A unidirectional Exchange results when the same Nx_Port initiates all the Sequences within the Exchange. A bi-directional Exchange results when the Sequences within the Exchange are initiated by both the Nx_Ports, but not concurrently.

An FC-4 may achieve full bandwidth utilization between two Nx_Ports by supporting two or more Exchanges concurrently with the two Nx_Ports using different Exchanges to transmit information. Coordination of the Exchanges is FC-4 specific. All frames and Sequences of a given Exchange shall be performed between the Nx_Ports that first originated and received the Exchange.

Exchanges are used by upper levels to relate sequences.

4.10.4.2 Exchange_Identifiers (OX_ID and RX_ID)

Exchange_Identifiers shall be used by the Originator and Responder to uniquely identify an Exchange.

The Originator assigns each new Exchange an Originator Exchange_ID (OX_ID) unique to the Originator or Originator-Responder pair and embeds it in all frames of the Exchange.

The Responder may assign a Responder Exchange_ID (RX_ID) that is unique to the Responder or Responder-Originator pair and communicates it to the Originator before the end of the first Sequence of the Exchange in Class 2 (see 19.6). The Responder embeds the RX_ID along with OX_ID in all subsequent frames of the Exchange.

On receiving the RX_ID from the Responder, the Originator embeds both the RX_ID and OX_ID in all subsequent frames of the Exchange it originates.

The Originator may initiate multiple concurrent Exchanges, but each shall use a unique OX_ID.

4.10.4.3 Exchange Status Blocks

An Exchange Status Block (ESB) is a logical construct representing the format of the Exchange status information (see 19.9.1). It is used to track the progress of an Exchange on a Sequence by Sequence basis. An Originator and a Responder use an Originator ESB and a Responder ESB, respectively, to track the status of an Exchange.

When an Originator initiates an Exchange, it assigns an Originator ESB associated with the Exchange. The Originator references the Originator ESB through its respective OX_ID (see 19.9.1).

The Responder assigns a Responder ESB to the Exchange. The Responder references the Responder ESB through the fully qualified X_ID (see 19.9.1 and FCP-4).

Both the Originator and the Responder track the status of the Exchange at their respective Nx_Ports.

4.10.5 Protocols

4.10.5.1 Primitive Sequence protocols

Primitive Sequence protocols are based on Primitive Sequences and specified for Link Failure, Link Initialization, Link Reset, and Online to Offline transition (see 7.8).

4.10.5.2 Fabric Login protocol

An Nx_Port may explicitly interchange Service Parameters with the Fabric, if present, by performing the Fabric Login protocol. The Fabric Login protocol also creates the first VN_Port associated with the PN_Port and the Fabric. The Fabric Login protocol is an explicit Fabric Login procedure (see FC-LS-4) that completes successfully (i.e., in an Exchange that completes with an LS_ACC).

4.10.5.3 Additional N_Port_ID protocol

An Nx_Port may create additional VN_Ports associated with the PN_Port and the Fabric using the Additional N_Port_ID protocol. The Additional N_Port_ID protocol is an Additional N_Port_ID procedure (see FC-LS-4) that completes successfully (i.e., in an Exchange that completes with an LS_ACC).

4.10.5.4 N_Port Login protocol

Before performing data transfer, an Nx_Port may explicitly interchange Service Parameters with another Nx_Port by performing the N_Port Login protocol. The N_Port Login protocol is an explicit N_Port Login procedure (see FC-LS-4) that completes successfully (i.e., in an Exchange that completes with an LS_ACC).

4.10.5.5 Data transfer protocol

The ULP data is transferred using data transfer protocols. Data transfer protocols are specified in FC-4 standards. For examples, see FCP-4 and RFC 4338.

4.10.5.6 Nx_Port Logout protocol

An Nx_Port may explicitly request removal of its Service Parameters from another Nx_Port by performing an Nx_Port Logout protocol. This may be used to free up resources at the other Nx_Port. The Nx_Port Logout protocol is an explicit N_Port Logout procedure (see FC-LS-4) that completes successfully (i.e., in an Exchange that completes with an LS_ACC).

4.10.5.7 Fabric Logout protocol

An Nx_Port may explicitly request removal of its Service Parameters from the Fabric by performing a Fabric Logout protocol. This may be used to free up resources at the Fabric. The Fabric Logout protocol is an explicit Fabric Logout procedure (see FC-LS-4) that completes successfully (i.e., in an Exchange that completes with an LS_ACC).

4.11 Segmentation and reassembly of application data

Mapping application data to Upper Level Protocol (ULP) data blocks is outside the scope of this standard. Mapping ULP data blocks to FC-4 Information Units (IUs) is specified in FC-4 level standards (e.g., FCP-4, FC-SB-6). FC-4 IUs are mapped to Sequences. The transport of Sequences using Fibre Channel frames is specified in this standard. Clause 21 specifies the following features of the FC-2V sublevel that support efficient mapping of IUs onto frames:

a) identifying and classifying IUs (see 21.3);
b) multiplexing IUs within a Sequence (see 21.4);
c) relative offset of Data_Frames in an IU (see 21.5); and
d) transporting portions of an IU out of relative offset order (see 21.6).

Together, the rules for these features control the segmentation of IUs into transmitted frames and the reassembly of IUs from received frames.

4.12 Error detection and recovery

In general, detected errors fall into two broad categories, frame errors and link-level errors.

Frame errors result from missing frames or corrupted frames. Corrupted frames are discarded and for corrupted frames the resulting error is detected at the Sequence level. At the Sequence level, a missing frame is detected or the Sequence times out due to one or more missing Data frames or Acknowledgments. If the discard policy (see 22.5.4.3) is used, the Sequence is aborted at the Sequence level once an error is detected. Sequence errors may also cause Exchange errors that may also cause the Exchange to be aborted. Error recovery may be performed on the failing Sequence or Exchange with the involvement of the sending upper level. Other properly performing Sequences are unaffected.

Link-level errors result from errors detected at a lower level of granularity than frames, where the basic signal characteristics are in question. Link-level errors include such errors as Loss-of-Signal, Loss-of-Synchronization and several link timeout errors that indicate no frame activity. Link-level errors may be isolated to a portion of the link. Transmission and reception of Primitive Sequences accomplish recovery from link-level errors. Recovery at the link-level disturbs normal frame flow and may introduce Sequence errors that may be resolved after recovery at the link-level.

See clause 22 for detailed error detection and recovery requirements.

5 FC-1 transmission codes

5.1 Overview

Transmission codes are a function of the FC-1 level. Communication of words and Special Functions are FC-1 functions. Use of Special Functions is an FC-2P function.

Information to be transmitted over a fibre shall be presented to the FC-1 level as a stream of words and Special Functions. It shall be encoded using one of the transmission codes specified in this clause into a stream of Transmission Words that shall be sent across the link. Information shall be received over the link as a stream of Transmission Words. The stream of Transmission Words shall be decoded using one of the transmission codes specified in this clause into a stream of words and Special Functions that shall be delivered to the FC-2P sublevel.

This standard specifies two types of transmission codes:

a) frame transfer transmission codes are specified to transfer Upper Level Protocol data; and
b) other transmission codes (e.g., the Transmitter Training Signal, see 5.6) are specified for purposes other than transferring Fibre Channel frames.

Both types of transmission code provide these functions:

a) maintaining Bit Synchronization and Transmission Word Synchronization;
b) communicating link control information; and
c) increasing the likelihood of detection of transmission errors.

Frame transfer transmission codes additionally provide these functions:

a) communicating link state machine transitions;
b) communicating other Special Functions;
c) denoting frame boundaries; and
d) communicating Upper Level Protocol data.

The encodings defined by the transmission code ensure that sufficient transitions are present in the serial bit stream to make clock recovery possible at the receiver. Such encoding also increases the likelihood of detecting any single or multiple bit errors that may occur during transmission and reception of information. In addition, the transmission code assures presence of a distinct and easily recognizable bit pattern that assists a receiver in achieving Transmission Word alignment on the incoming bit stream.

An FC-0 standard for a physical variant may specify a transmission code. If an FC-0 standard for a physical variant does not specify a transmission code, then the physical variant shall use the 8B/10B transmission code (see 5.2).

5.2 8B/10B transmission code

5.2.1 Overview

An FC-0 standard (e.g., FC-PI-5) may specify the use of the 8B/10B transmission code as its frame transfer transmission code.

The 8B/10B transmission code specified in this standard treats words as a series of four bytes and treats Special Functions as a series of a control value and three bytes.

An 8B/10B Transmission Word is composed of four contiguous valid or invalid Transmission Characters treated as a unit. Four data bytes and special codes shall be encoded according to the rules specified by 5.2.5 to create a Transmission Word. Likewise, the Transmission Characters of a Transmission Word shall be decoded according to the rules specified by 5.2.6 to create data bytes and special codes.

When the 8B/10B transmission code is used, the Fill Word (see 11.3.2) is either Idle or ARBff, depending on whether Emission Lowering Protocol (see 11.3.5) is used.

An 8B/10B Transmission Word shall be transmitted so that each bit in the Transmission Word is transmitted before all less significant bits in the Transmission Word.

5.2.2 Notation conventions

8B/10B uses letter notation for describing information bits and control variables. Such notation differs from the bit notation specified by the remainder of this standard (see 3.2). The following text describes the translation process between these notations and provides a translation example. It also describes the conventions used to name valid Transmission Characters. This text is provided for the purposes of terminology clarification only and is not intended to restrict the implementation of 8B/10B functions in any way.

An unencoded 8B/10B information byte is composed of eight information bits A,B,C,D,E,F,G,H and the control variable Z. This information is encoded by 8B/10B into the bits a,b,c,d,e,i,f,g,h,j of a 10-bit Transmission Character.

An information bit contains either a binary zero or a binary one. A control variable has either the value D or the value K. An encoded bit contains either a binary zero or a binary one. When the control variable associated with an unencoded 8B/10B information byte contains the value D, that byte is referred to as a data byte. When the control variable associated with an unencoded 8B/10B information byte contains the value K, that byte is referred to as a special code.

The unencoded information bit labeled A corresponds to bit 0 in the bit numbering scheme of the FC-2 specification, B corresponds to bit 1, and so on, as shown in table 2. The control variable is typically not specified by FC-2. When the control variable is not specified by FC-2, 8B/10B assumes its value to be D (data).

Table 2 - Bit designations

FC-2 bit notation:	7	6	5	4	3	2	1	0	Control Variable
8B/10B unencoded bit notation:	H	G	F	E	D	C	B	A	Z

Each valid Transmission Character has been given a name using the convention, Zxx.y. Where:

a) Z is the control variable of the unencoded 8B/10B information byte. The value of Z is used to indicate whether the Transmission Character is a data character (Z = D) or a special character (Z = K);
b) xx is the decimal value of the binary number composed of the bits E, D, C, B, and A of the unencoded 8B/10B information byte in that order; and
c) y is the decimal value of the binary number composed of the bits H, G, and F of the unencoded 8B/10B information byte in that order.

Table 3 shows an example of the conversion from FC-2 byte notation to the 8B/10B Transmission Character naming convention described above.

Table 3 - Conversion Example

FC-2 byte notification:	BCh –- Special Code											
FC-2 bit notation:	7	6	5	4		3	2	1	0		Control	
	1	0	1	1		1	1	0	0		K	
8B/10B unencoded bit notation:	H	G	F			E	D	C	B	A	Z	
	1	0	1			1	1	1	0	0	K	
8B/10B unencoded bit notation reordered to conform with Zxx.y naming convention:	Z			E	D	C	B	A		H	G	F
	K			1	1	1	0	0		1	0	1
8B/10B Transmission Character name:	K					28					5	

Most Kxx.y combinations do not result in valid Transmission Characters within the 8B/10B transmission code. Only those combinations that result in special characters as specified by table 5 are considered valid.

5.2.3 Valid 8B/10B Transmission Characters

Table 4 and table 5 define the valid data characters and valid special characters (K characters), respectively. These tables shall be used for both generating valid Transmission Characters (encoding) and checking the validity of received Transmission Characters (decoding).

Within the definition of the 8B/10B transmission code, the bit positions of the 10 bit Transmission Characters are labeled a,b,c,d,e,i,f,g,h, and j. Bit "a" shall be transmitted first, followed by bits "b," "c," "d," "e," "i," "f," "g," "h," and "j," in that order. Bit "i" shall be transmitted between bit "e" and bit "f," rather than in the order that would be indicated by the letters of the alphabet.

Table 4 - Valid Data Characters (part 1 of 4)

Data Byte Name	Bits HGF EDCBA (binary)	Current RD - abcdei fghj (binary)	Current RD+ abcdei fghj (binary)	Data Byte Name	Bits HGF EDCBA (binary)	Current RD - abcdei fghj (binary)	Current RD+ abcdei fgh (binary)
D00.0	000 00000	100111 0100	011000 1011	D00.1	001 00000	100111 1001	011000 1001
D01.0	000 00001	011101 0100	100010 1011	D01.1	001 00001	011101 1001	100010 1001
D02.0	000 00010	101101 0100	010010 1011	D02.1	001 00010	101101 1001	010010 1001
D03.0	000 00011	110001 1011	110001 0100	D03.1	001 00011	110001 1001	110001 1001
D04.0	000 00100	110101 0100	001010 1011	D04.1	001 00100	110101 1001	001010 1001
D05.0	000 00101	101001 1011	101001 0100	D05.1	001 00101	101001 1001	101001 1001
D06.0	000 00110	011001 1011	011001 0100	D06.1	001 00110	011001 1001	011001 1001
D07.0	000 00111	111000 1011	000111 0100	D07.1	001 00111	111000 1001	000111 1001
D08.0	000 01000	111001 0100	000110 1011	D08.1	001 01000	111001 1001	000110 1001
D09.0	000 01001	100101 1011	100101 0100	D09.1	001 01001	100101 1001	100101 1001
D10.0	000 01010	010101 1011	010101 0100	D10.1	001 01010	010101 1001	010101 1001
D11.0	000 01011	110100 1011	110100 0100	D11.1	001 01011	110100 1001	110100 1001
D12.0	000 01100	001101 1011	001101 0100	D12.1	001 01100	001101 1001	001101 1001
D13.0	000 01101	101100 1011	101100 0100	D13.1	001 01101	101100 1001	101100 1001
D14.0	000 01110	011100 1011	011100 0100	D14.1	001 01110	011100 1001	011100 1001
D15.0	000 01111	010111 0100	101000 1011	D15.1	001 01111	010111 1001	101000 1001
D16.0	000 10000	011011 0100	100100 1011	D16.1	001 10000	011011 1001	100100 1001
D17.0	000 10001	100011 1011	100011 0100	D17.1	001 10001	100011 1001	100011 1001
D18.0	000 10010	010011 1011	010011 0100	D18.1	001 10010	010011 1001	010011 1001
D19.0	000 10011	110010 1011	110010 0100	D19.1	001 10011	110010 1001	110010 1001
D20.0	000 10100	001011 1011	001011 0100	D20.1	001 10100	001011 1001	001011 1001
D21.0	000 10101	101010 1011	101010 0100	D21.1	001 10101	101010 1001	101010 1001
D22.0	000 10110	011010 1011	011010 0100	D22.1	001 10110	011010 1001	011010 1001
D23.0	000 10111	111010 0100	000101 1011	D23.1	001 10111	111010 1001	000101 1001
D24.0	000 11000	110011 0100	001100 1011	D24.1	001 11000	110011 1001	001100 1001
D25.0	000 11001	100110 1011	100110 0100	D25.1	001 11001	100110 1001	100110 1001
D26.0	000 11010	010110 1011	010110 0100	D26.1	001 11010	010110 1001	010110 1001
D27.0	000 11011	110110 0100	001001 1011	D27.1	001 11011	110110 1001	001001 1001
D28.0	000 11100	001110 1011	001110 0100	D28.1	001 11100	001110 1001	001110 1001
D29.0	000 11101	101110 0100	010001 1011	D29.1	001 11101	101110 1001	010001 1001
D30.0	000 11110	011110 0100	100001 1011	D30.1	001 11110	011110 1001	100001 1001
D31.0	000 11111	101011 0100	010100 1011	D31.1	001 11111	101011 1001	010100 1001

Table 4 - Valid Data Characters (part 2 of 4)

Data Byte Name	Bits HGF EDCBA (binary)	Current RD - abcdei fghj (binary)	Current RD+ abcdei fghj (binary)	Data Byte Name	Bits HGF EDCBA (binary)	Current RD - abcdei fghj (binary)	Current RD+ abcdei fgh (binary)
D00.2	010 00000	100111 0101	011000 0101	D00.3	011 00000	100111 0011	011000 1100
D01.2	010 00001	011101 0101	100010 0101	D01.3	011 00001	011101 0011	100010 1100
D02.2	010 00010	101101 0101	010010 0101	D02.3	011 00010	101101 0011	010010 1100
D03.2	010 00011	110001 0101	110001 0101	D03.3	011 00011	110001 1100	110001 0011
D04.2	010 00100	110101 0101	001010 0101	D04.3	011 00100	110101 0011	001010 1100
D05.2	010 00101	101001 0101	101001 0101	D05.3	011 00101	101001 1100	101001 0011
D06.2	010 00110	011001 0101	011001 0101	D06.3	011 00110	011001 1100	011001 0011
D07.2	010 00111	111000 0101	000111 0101	D07.3	011 00111	111000 1100	000111 0011
D08.2	010 01000	111001 0101	000110 0101	D08.3	011 01000	111001 0011	000110 1100
D09.2	010 01001	100101 0101	100101 0101	D09.3	011 01001	100101 1100	100101 0011
D10.2	010 01010	010101 0101	010101 0101	D10.3	011 01010	010101 1100	010101 0011
D11.2	010 01011	110100 0101	110100 0101	D11.3	011 01011	110100 1100	110100 0011
D12.2	010 01100	001101 0101	001101 0101	D12.3	011 01100	001101 1100	001101 0011
D13.2	010 01101	101100 0101	101100 0101	D13.3	011 01101	101100 1100	101100 0011
D14.2	010 01110	011100 0101	011100 0101	D14.3	011 01110	011100 1100	011100 0011
D15.2	010 01111	010111 0101	101000 0101	D15.3	011 01111	010111 0011	101000 1100
D16.2	010 10000	011011 0101	100100 0101	D16.3	011 10000	011011 0011	100100 1100
D17.2	010 10001	100011 0101	100011 0101	D17.3	011 10001	100011 1100	100011 0011
D18.2	010 10010	010011 0101	010011 0101	D18.3	011 10010	010011 1100	010011 0011
D19.2	010 10011	110010 0101	110010 0101	D19.3	011 10011	110010 1100	110010 0011
D20.2	010 10100	001011 0101	001011 0101	D20.3	011 10100	001011 1100	001011 0011
D21.2	010 10101	101010 0101	101010 0101	D21.3	011 10101	101010 1100	101010 0011
D22.2	010 10110	011010 0101	011010 0101	D22.3	011 10110	011010 1100	011010 0011
D23.2	010 10111	111010 0101	000101 0101	D23.3	011 10111	111010 0011	000101 1100
D24.2	010 11000	110011 0101	001100 0101	D24.3	011 11000	110011 0011	001100 1100
D25.2	010 11001	100110 0101	100110 0101	D25.3	011 11001	100110 1100	100110 0011
D26.2	010 11010	010110 0101	010110 0101	D26.3	011 11010	010110 1100	010110 0011
D27.2	010 11011	110110 0101	001001 0101	D27.3	011 11011	110110 0011	001001 1100
D28.2	010 11100	001110 0101	001110 0101	D28.3	011 11100	001110 1100	001110 0011
D29.2	010 11101	101110 0101	010001 0101	D29.3	011 11101	101110 0011	010001 1100
D30.2	010 11110	011110 0101	100001 0101	D30.3	011 11110	011110 0011	100001 1100
D31.2	010 11111	101011 0101	010100 0101	D31.3	011 11111	101011 0011	010100 1100

Table 4 - Valid Data Characters (part 3 of 4)

Data Byte Name	Bits HGF EDCBA (binary)	Current RD - abcdei fghj (binary)	Current RD+ abcdei fghj (binary)	Data Byte Name	Bits HGF EDCBA (binary)	Current RD - abcdei fghj (binary)	Current RD+ abcdei fgh (binary)
D00.4	100 00000	100111 0010	011000 1101	D00.5	101 00000	100111 1010	011000 1010
D01.4	100 00001	011101 0010	100010 1101	D01.5	101 00001	011101 1010	100010 1010
D02.4	100 00010	101101 0010	010010 1101	D02.5	101 00010	101101 1010	010010 1010
D03.4	100 00011	110001 1101	110001 0010	D03.5	101 00011	110001 1010	110001 1010
D04.4	100 00100	110101 0010	001010 1101	D04.5	101 00100	110101 1010	001010 1010
D05.4	100 00101	101001 1101	101001 0010	D05.5	101 00101	101001 1010	101001 1010
D06.4	100 00110	011001 1101	011001 0010	D06.5	101 00110	011001 1010	011001 1010
D07.4	100 00111	111000 1101	000111 0010	D07.5	101 00111	111000 1010	000111 1010
D08.4	100 01000	111001 0010	000110 1101	D08.5	101 01000	111001 1010	000110 1010
D09.4	100 01001	100101 1101	100101 0010	D09.5	101 01001	100101 1010	100101 1010
D10.4	100 01010	010101 1101	010101 0010	D10.5	101 01010	010101 1010	010101 1010
D11.4	100 01011	110100 1101	110100 0010	D11.5	101 01011	110100 1010	110100 1010
D12.4	100 01100	001101 1101	001101 0010	D12.5	101 01100	001101 1010	001101 1010
D13.4	100 01101	101100 1101	101100 0010	D13.5	101 01101	101100 1010	101100 1010
D14.4	100 01110	011100 1101	011100 0010	D14.5	101 01110	011100 1010	011100 1010
D15.4	100 01111	010111 0010	101000 1101	D15.5	101 01111	010111 1010	101000 1010
D16.4	100 10000	011011 0010	100100 1101	D16.5	101 10000	011011 1010	100100 1010
D17.4	100 10001	100011 1101	100011 0010	D17.5	101 10001	100011 1010	100011 1010
D18.4	100 10010	010011 1101	010011 0010	D18.5	101 10010	010011 1010	010011 1010
D19.4	100 10011	110010 1101	110010 0010	D19.5	101 10011	110010 1010	110010 1010
D20.4	100 10100	001011 1101	001011 0010	D20.5	101 10100	001011 1010	001011 1010
D21.4	100 10101	101010 1101	101010 0010	D21.5	101 10101	101010 1010	101010 1010
D22.4	100 10110	011010 1101	011010 0010	D22.5	101 10110	011010 1010	011010 1010
D23.4	100 10111	111010 0010	000101 1101	D23.5	101 10111	111010 1010	000101 1010
D24.4	100 11000	110011 0010	001100 1101	D24.5	101 11000	110011 1010	001100 1010
D25.4	100 11001	100110 1101	100110 0010	D25.5	101 11001	100110 1010	100110 1010
D26.4	100 11010	010110 1101	010110 0010	D26.5	101 11010	010110 1010	010110 1010
D27.4	100 11011	110110 0010	001001 1101	D27.5	101 11011	110110 1010	001001 1010
D28.4	100 11100	001110 1101	001110 0010	D28.5	101 11100	001110 1010	001110 1010
D29.4	100 11101	101110 0010	010001 1101	D29.5	101 11101	101110 1010	010001 1010
D30.4	100 11110	011110 0010	100001 1101	D30.5	101 11110	011110 1010	100001 1010
D31.4	100 11111	101011 0010	010100 1101	D31.5	101 11111	101011 1010	010100 1010

Table 4 - Valid Data Characters (part 4 of 4)

Data Byte Name	Bits HGF EDCBA (binary)	Current RD - abcdei fghj (binary)	Current RD+ abcdei fghj (binary)	Data Byte Name	Bits HGF EDCBA (binary)	Current RD - abcdei fghj (binary)	Current RD+ abcdei fgh (binary)
D00.6	110 00000	100111 0110	011000 0110	D00.7	111 00000	100111 0001	011000 1110
D01.6	110 00001	011101 0110	100010 0110	D01.7	111 00001	011101 0001	100010 1110
D02.6	110 00010	101101 0110	010010 0110	D02.7	111 00010	101101 0001	010010 1110
D03.6	110 00011	110001 0110	110001 0110	D03.7	111 00011	110001 1110	110001 0001
D04.6	110 00100	110101 0110	001010 0110	D04.7	111 00100	110101 0001	001010 1110
D05.6	110 00101	101001 0110	101001 0110	D05.7	111 00101	101001 1110	101001 0001
D06.6	110 00110	011001 0110	011001 0110	D06.7	111 00110	011001 1110	011001 0001
D07.6	110 00111	111000 0110	000111 0110	D07.7	111 00111	111000 1110	000111 0001
D08.6	110 01000	111001 0110	000110 0110	D08.7	111 01000	111001 0001	000110 1110
D09.6	110 01001	100101 0110	100101 0110	D09.7	111 01001	100101 1110	100101 0001
D10.6	110 01010	010101 0110	010101 0110	D10.7	111 01010	010101 1110	010101 0001
D11.6	110 01011	110100 0110	110100 0110	D11.7	111 01011	110100 1110	110100 1000
D12.6	110 01100	001101 0110	001101 0110	D12.7	111 01100	001101 1110	001101 0001
D13.6	110 01101	101100 0110	101100 0110	D13.7	111 01101	101100 1110	101100 1000
D14.6	110 01110	011100 0110	011100 0110	D14.7	111 01110	011100 1110	011100 1000
D15.6	110 01111	010111 0110	101000 0110	D15.7	111 01111	010111 0001	101000 1110
D16.6	110 10000	011011 0110	100100 0110	D16.7	111 10000	011011 0001	100100 1110
D17.6	110 10001	100011 0110	100011 0110	D17.7	111 10001	100011 0111	100011 0001
D18.6	110 10010	010011 0110	010011 0110	D18.7	111 10010	010011 0111	010011 0001
D19.6	110 10011	110010 0110	110010 0110	D19.7	111 10011	110010 1110	110010 0001
D20.6	110 10100	001011 0110	001011 0110	D20.7	111 10100	001011 0111	001011 0001
D21.6	110 10101	101010 0110	101010 0110	D21.7	111 10101	101010 1110	101010 0001
D22.6	110 10110	011010 0110	011010 0110	D22.7	111 10110	011010 1110	011010 0001
D23.6	110 10111	111010 0110	000101 0110	D23.7	111 10111	111010 0001	000101 1110
D24.6	110 11000	110011 0110	001100 0110	D24.7	111 11000	110011 0001	001100 1110
D25.6	110 11001	100110 0110	100110 0110	D25.7	111 11001	100110 1110	100110 0001
D26.6	110 11010	010110 0110	010110 0110	D26.7	111 11010	010110 1110	010110 0001
D27.6	110 11011	110110 0110	001001 0110	D27.7	111 11011	110110 0001	001001 1110
D28.6	110 11100	001110 0110	001110 0110	D28.7	111 11100	001110 1110	001110 0001
D29.6	110 11101	101110 0110	010001 0110	D29.7	111 11101	101110 0001	010001 1110
D30.6	110 11110	011110 0110	100001 0110	D30.7	111 11110	011110 0001	100001 1110
D31.6	110 11111	101011 0110	010100 0110	D31.7	111 11111	101011 0001	010100 1110

Table 5 - Valid Special Characters

Special Code Name	Current RD - abcdei fghj	Current RD + abcdei fghj
K28.0	001111 0100b	110000 1011b
K28.1	001111 1001b	110000 0110b
K28.2	001111 0101b	110000 1010b
K28.3	001111 0011b	110000 1100b
K28.4	001111 0010b	110000 1101b
K28.5	001111 1010b	110000 0101b
K28.6	001111 0110b	110000 1001b
K28.7	001111 1000b	110000 0111b
K23.7	111010 1000b	000101 0111b
K27.7	110110 1000b	001001 0111b
K29.7	101110 1000b	010001 0111b
K30.7	011110 1000b	100001 0111b

5.2.4 Running disparity

In table 4 and table 5, each Valid-Data-Byte or special code entry has two columns that represent two (not necessarily different) Transmission Characters. The two columns correspond to the current value of the running disparity ("Current RD -" or "Current RD +"). Running disparity is a binary parameter with either the value negative (-) or the value positive (+). The running disparity at the beginning of an Ordered Set is the beginning running disparity (beginning RD).

After powering on, the transmitter shall initialize the Current RD to negative. Upon transmission of any Transmission Character, the transmitter shall calculate a new value for its running disparity based on the contents of the transmitted character and the Running Disparity at the beginning of the Transmission Character.

After powering on or exiting diagnostic mode (the definition of diagnostic mode is beyond the scope of this standard), the receiver should assume either the positive or negative value for its initial running disparity. Upon reception of any Transmission Character, the receiver shall determine whether the Transmission Character is valid or invalid (see 5.2.6 and table 4) and shall calculate a new value for its running disparity based on the contents of the received character and the Running Disparity at the beginning of the received Transmission Character.

The following rules for running disparity shall be used to calculate the new running disparity value for Transmission Characters that have been transmitted (i.e., transmitter's running disparity) and that have been received (i.e., receiver's running disparity).

Running disparity for a Transmission Character shall be calculated on the basis of sub-blocks, where the first six bits (i.e., abcdei) form one sub-block (i.e., six-bit sub-block) and the second four bits (i.e., fghj) form the other sub-block (i.e., four-bit sub-block). Running disparity at the beginning of the six-bit sub-block is the running disparity at the end of the last Transmission Character. Running disparity at the beginning of the four-bit sub-block is the running disparity at the end of the six-bit sub-block. Running disparity at the end of the Transmission Character is the running disparity at the end of the four-bit sub-block.

Running disparity for the sub-blocks shall be calculated as follows:

a) running disparity at the end of any sub-block is positive:
   A) if the sub-block contains more ones than zeros;
   B) if at the end of the six-bit sub-block, the six-bit sub-block is 000111b; or
   C) if at the end of the four-bit sub-block, the four-bit sub-block is 0011b;
b) running disparity at the end of any sub-block is negative:
   A) if the sub-block contains more zeros than ones;
   B) if at the end of the six-bit sub-block, the six-bit sub-block is 111000b; or
   C) if at the end of the four-bit sub-block, the four-bit sub-block is 1100b;

   or
c) otherwise, running disparity at the end of the sub-block is the same as at the beginning of the sub-block.

All sub-blocks with equal numbers of zeros and ones are disparity neutral. In order to limit the run length of zeros or ones between sub-blocks, the 8B/10B transmission code rules specify that sub-blocks encoded as 000111b or 0011b are generated only when the running disparity at the beginning of the sub-block is positive; thus, running disparity at the end of these sub-blocks shall also be positive. Likewise, sub-blocks containing 111000b or 1100b are generated only when the running disparity at the beginning of the sub-block is negative; thus, running disparity at the end of these sub-blocks shall also be negative.

5.2.5 Generating Transmission Characters

The appropriate entry in the table shall be found for the data byte or special code used in generating (encoding) a Transmission Character. The current value of the transmitter's running disparity shall be used to select the Transmission Character from its corresponding column. For each Transmission Character transmitted, a new value of the running disparity shall be calculated. This new value shall be used as the transmitter's current running disparity for the next data byte or special code to be encoded and transmitted.

5.2.6 Validity of received Transmission Characters

The column corresponding to the current value of the receiver's running disparity shall be searched for the received Transmission Character. If the received Transmission Character is found in the proper column, then the Transmission Character shall be considered valid and the associated data byte or special code determined (decoded). If the received Transmission Character is not found in that column, then the Transmission Character shall be considered invalid and a code violation detected and reported to its associated port. Independent of the Transmission Character's validity, the received Transmission Character shall be used to calculate a new value of running disparity. This new value shall be used as the receiver's current running disparity for the next received Transmission Character.

Detection of a code violation does not necessarily indicate that the Transmission Character where the code violation was detected is in error. Code violations may result from a prior error that altered the running disparity of the bit stream but that did not result in a detectable error at the Transmission Character where the error occurred. The example shown in table 6 exhibits this behavior.

Table 6 - Delayed Code Violation example

	RD	Character	RD	Character	RD	Character	RD
Transmitted character stream	-	D21.1	-	D10.2	-	D23.5	+
Transmitted bit stream	-	101010 1001b	-	010101 0101b	-	111010 1010b	+
Bit stream after error	-	101010 1011b	+	010101 0101b	+	111010 1010b	+
Decoded character stream	-	D21.0	+	D10.2	+	code violation	+

The K28.7 special character shall not be followed by any of the following special or data characters: K28.x, D3.x, D11.x, D12.x, D19.x, D20.x, or D28.x, where x is a value in the range 0 to 7, inclusive.

A receiver may substitute a K30.7 Transmission Character for a character received in error. A Transmission Word in which a character received in error has been replaced by a K30.7 Transmission Character shall be detected as an invalid Transmission Word (see 6.3.4.2). A transmitter shall not cause a K30.7 Transmission Character to be sent.

5.2.7 8B/10B Ordered Sets

5.2.7.1 General

In the 8B/10B transmission code, an Ordered Set is a pattern in encoded data sent or received by an FC_Port that, when decoded, communicates a Special Function rather than a word. Ordered Sets also provide the ability to obtain bit and Transmission Word Synchronization and establish Transmission Word boundary alignment. See 6.3.3.2 for the synchronization rules.

Characters within 8B/10B Ordered Sets shall be transmitted sequentially beginning with the special character used to distinguish the Ordered Set (e.g., K28.5) and proceeding character by character from left to right within the definition of the Ordered Set until all characters of the Ordered Set are transmitted.

If an unrecognized Ordered Set is detected while receiving 8B/10B encoded data, it shall be treated as a Fill Word. Treating unrecognized Ordered Sets as Fill Words allows future introduction of Ordered Sets for additional features and functions beyond the scope of this standard.

Each EOF-delimiter Ordered Set in 8B/10B encoded data is defined such that negative current running disparity shall result after processing of the final (right-most) character of the Ordered Set. This, in combination with the running disparity initialization rules, ensures that the first Ordered Set following an EOF delimiter, transmitter power on, or transmitter exit from diagnostic mode (the definition of diagnostic mode is beyond the scope of this standard) shall always be transmitted with negative beginning running disparity. The Ordered Sets defined for the Primitive Signals and Primitive Sequences preserve this negative disparity, ensuring that the Ordered Sets associated with SOF Delimiters, Primitive Signals, and Primitive Sequences are always transmitted with negative beginning running disparity. As a result, Primitive Signal, Primitive Sequence, and SOF Delimiter Ordered Sets are defined for the negative beginning running disparity case only. The primary benefit of such a definition is that it allows Fill Words to be removed and added from an encoded bit stream one Fill Word at a time without altering the beginning running disparity associated with the Transmission Word subsequent to the removed Fill Word.

The K28.5 special character is used as the first character of all 8B/10B Ordered Sets defined in this standard for the following reasons:

a) bits abcdeif make up a comma; this is a singular bit pattern that in the absence of transmission errors shall not appear in any other location of a Transmission Character and shall not be generated across the boundaries of any two adjacent Transmission Characters. The comma should be used to easily find and verify Transmission Character and Transmission Word boundaries of the received bit stream; and
b) bits ghj of the encoded character present the maximum number of transitions, simplifying receiver acquisition of Bit Synchronization.

The second character of the Ordered Sets used to represent 8B/10B EOF Delimiters differentiates between normal and invalid frames. It also ensures that the running disparity resulting after processing of an EOF Ordered Set is negative independent of the value of beginning running disparity. Link_Reset (LR) and Link_Reset_Response (LRR) Ordered Sets are also differentiated through the use of their second characters.

The third and fourth characters of the Delimiter functions, Receiver_Ready, and the Fill Words are repeated to ensure that an error affecting a single character shall not result in the recognition of an Ordered Set other than the one transmitted.

For some Primitive Signals and Primitive Sequences, the second byte of the Ordered Set specifies the function of the Ordered Set. Bytes 3 and 4 of the Ordered Set are used to carry parameter information. The receiving FC_Ports analyze the parameter information before taking any action.

5.2.7.2 8B/10B Frame delimiters

A frame delimiter is represented by an Ordered Set that immediately precedes or follows the contents of a frame. Separate and distinct Ordered Sets shall identify the start of a frame and the end of a frame and shall be recognized when a single Ordered Set is detected. The Ordered Sets used to represent frame delimiters are listed in table 7. See 11.3.7 and 11.3.8 for the usage of each.

Table 7 - 8B/10B Frame Delimiters

Abbr.	Delimiter Function	Reference	Beginning RD	Ordered Set
SOF_{c1}	SOF Connect Class 1 - Obsolete	-	Negative	K28.5 - D21.5 - D23.0 - D23.0
SOF_{i1}	SOF Initiate Class 1 - Obsolete	-	Negative	K28.5 - D21.5 - D23.2 - D23.2
SOF_{n1}	SOF Normal Class 1 - Obsolete	-	Negative	K28.5 - D21.5 - D23.1 - D23.1
SOF_{i2}	SOF Initiate Class 2	11.3.7.2.2	Negative	K28.5 - D21.5 - D21.2 - D21.2
SOF_{n2}	SOF Normal Class 2	11.3.7.3.2	Negative	K28.5 - D21.5 - D21.1 - D21.1
SOF_{i3}	SOF Initiate Class 3	11.3.7.2.3	Negative	K28.5 - D21.5 - D22.2 - D22.2
SOF_{n3}	SOF Normal Class 3	11.3.7.3.3	Negative	K28.5 - D21.5 - D22.1 - D22.1
SOF_{c4}	SOF Activate Class 4 - Obsolete	-	Negative	K28.5 - D21.5 - D25.0 - D25.0
SOF_{i4}	SOF Initiate Class 4 - Obsolete	-	Negative	K28.5 - D21.5 - D25.2 - D25.2
SOF_{n4}	SOF Normal Class 4 - Obsolete	-	Negative	K28.5 - D21.5 - D25.1 - D25.1
SOF_{f}	SOF Fabric	FC-SW-7	Negative	K28.5 - D21.5 - D24.2 - D24.2
EOF_{t}	EOF Terminate	11.3.8.2.2	Negative	K28.5 - D21.4 - D21.3 - D21.3
			Positive	K28.5 - D21.5 - D21.3 - D21.3
EOF_{dt}	EOF Disconnect-Terminate-Class 1 - Obsolete	-	Negative	K28.5 - D21.4 - D21.4 - D21.4
			Positive	K28.5 - D21.5 - D21.4 - D21.4
EOF_{a}	EOF Abort	11.3.8.3.2	Negative	K28.5 - D21.4 - D21.7 - D21.7
			Positive	K28.5 - D21.5 - D21.7 - D21.7
EOF_{n}	EOF Normal	11.3.8.2.1	Negative	K28.5 - D21.4 - D21.6 - D21.6
			Positive	K28.5 - D21.5 - D21.6 - D21.6
EOF_{ni}	EOF Normal-Invalid	11.3.8.3.3	Negative	K28.5 - D10.4 - D21.6 - D21.6
			Positive	K28.5 - D10.5 - D21.6 - D21.6
EOF_{dti}	EOF Disconnect-Terminate-Invalid Class 1 - Obsolete	-	Negative	K28.5 - D10.4 - D21.4 - D21.4
			Positive	K28.5 - D10.5 - D21.4 - D21.4
EOF_{rt}	EOF Remove-Terminate Class 4 - Obsolete	-	Negative	K28.5 - D21.4 - D25.4 - D25.4
			Positive	K28.5 - D21.5 - D25.4 - D25.4
EOF_{rti}	EOF Remove-Terminate Invalid Class 4 - Obsolete	-	Negative	K28.5 - D10.4 - D25.4 - D25.4
			Positive	K28.5 - D10.5 - D25.4 - D25.4

5.2.7.3 8B/10B Primitive Signals

A Primitive Signal is an Ordered Set designated by this standard to have special meaning. All FC_Ports shall at a minimum recognize R_RDY and Idle Primitive Signals. All Primitive Signals not recognized by the FC_Port shall be treated as Fill Words. When a single Ordered Set is detected possible Primitive Signals detected are listed in table 8.

To assure a sufficient number of Fill Words between frames, the originator of any Primitive Signal (except ARByx, ARB(val), MRK, SYNx, SYNy, and SYNz) shall precede and follow the Primitive Signal by a minimum of two Fill Words. Because Fill Words may be removed by intermediate transmitters, the number of Fill Words preceding or following a Primitive Signal at a receiver may be reduced to zero.

All Primitive Signals in 8b/10B have negative beginning running disparity.

Table 8 - 8B/10B Primitive Signals

Abbr.	Primitive Signal	Reference	Ordered Set
Idle	Idle	5.2.7.4	K28.5 – D21.4 – D21.5 – D21.5
R_RDY	Receiver_Ready	20.4	K28.5 – D21.4 – D10.2 – D10.2
VC_RDY	Virtual Circuit Ready	FC-SW-7	K28.5 – D21.7 – VC_ID – VC_ID
BB_SCs	buffer-to-buffer State Change (SOF)	20.4.9	K28.5 - D21.4 – D22.4 – D22.4
BB_SCr	buffer-to-buffer State Change (R_RDY)	20.4.9	K28.5 - D21.4 – D22.6 – D22.6
SYNx	Clock Synchronization Word X	24.4	K28.5 – D31.3 – CS_X1 – CS_X2
SYNy	Clock Synchronization Word Y	24.4	K28.5 – D31.5 – CS_Y1 – CS_Y2
SYNz	Clock Synchronization Word Z	24.4	K28.5 – D31.6 – CS_Z1 – CS_Z2
ARBff	Arbitrate	FC-AL-2 and 11.3.5	K28.5 - D20.4 - D31.7 - D31.7
ARByx	Arbitrate	FC-AL-2	K28.5 – D20.4 – y – x
ARB(val)	Arbitrate	FC-AL-2	K28.5 – D20.4 – val – val
ARB(F1)	Warning Congestion Signal	25	K28.5 – D20.4 – D17.7 – D17.7

Table 8 - 8B/10B Primitive Signals

Abbr.	Primitive Signal	Reference	Ordered Set
ARB(F7)	Alarm Congestion Signal	25	K28.5 – D20.4 – D23.7 – D23.7
CLS	Close	FC-AL-2	K28.5 – D5.4 – D21.5 – D21.5
DHD	Dynamic Half-Duplex	FC-AL-2	K28.5 – D10.4 – D21.5 – D21.5
MRKtx	Mark	FC-AL-2	K28.5 – D31.2 – MK_TP – AL_PS
OPNyx	Open full-duplex	FC-AL-2	K28.5 – D17.4 – AL_PD – AL_PS
OPNyy	Open half-duplex	FC-AL-2	K28.5 – D17.4 – AL_PD – AL_PD
OPNyr	Open selective replicate	FC-AL-2	K28.5 – D17.4 – AL_PD – D31.7
OPNfr	Open broadcast replicate	FC-AL-2	K28.5 – D17.4 – D31.7 – D31.7
Idle2	Alternate Idle 2	FC-BaseT	K28.5 – D7.0 – D9.1 – D9.1
Idle3	Alternate Idle 3	FC-BaseT	K28.5 – D7.0 – D9.5 – D9.5

5.2.7.4 Idle

Idle is a Primitive Signal transmitted to indicate that link initialization is complete on all links, and as Fill Words to maintain link synchronization on links not using Emission Lowering Protocol. Idles shall be transmitted as Fill Words on links not using Emission Lowering Protocol during periods of time when frames, other Primitive Signals or Primitive Sequences are not required to be transmitted. See 11.3 for the requirements for the insertion of Fill Words between frames.

5.2.7.5 8B/10B Primitive Sequences

A Primitive Sequence is an Ordered Set that is transmitted repeatedly and continuously. Primitive Sequences are transmitted to indicate specific conditions within or conditions encountered by the receiver logic of an FC_Port. See table 9 for bit encodings of Primitive Sequences. The NOS, OLS, LR, and LRR Primitive Sequences shall be supported. If the port supports FC-AL-2, it shall support the various LIP, LPB, and LPE Primitives Sequences shown in table 9.

All Primitive Sequences in 8b/10B have negative beginning running disparity.

Table 9 - 8B/10B Primitive Sequences

Abbr	Primitive Sequence	Reference	Ordered Set
NOS	Not_operational	clause 7	K28.5 – D21.2 – D31.5 – D5.2
OLS	Offline	clause 7	K28.5 – D21.1 – D10.4 – D21.2
LR	Link_Reset	clause 7	K28.5 – D9.2 – D31.5 – D9.2
LRR	Link_Reset_Response	clause 7	K28.5 – D21.1 – D31.5 – D9.2
LIP(F7,F7)	Loop Initialization - F7,F7	FC-AL-2	K28.5 – D21.0 – D23.7 – D23.7
LIP(F8,F7)	Loop Initialization - F8,F7	FC-AL-2	K28.5 – D21.0 – D24.7 – D23.7
LIP(F7,x)	Loop Initialization - F7,x	FC-AL-2	K28.5 – D21.0 – D23.7 – AL_PS
LIP(F8,x)	Loop Initialization - F8,x	FC-AL-2	K28.5 – D21.0 – D24.7 – AL_PS
LIPyx	Loop Initialization - reset	FC-AL-2	K28.5 – D21.0 – AL_PD – AL_PS
LIPfx	Loop Initialization - reset all	FC-AL-2	K28.5 – D21.0 – D31.7 – AL_PS
LIPba	Loop Initialization - reserved LIPba	FC-AL-2	K28.5 – D21.0 – b – a
LPByx	Loop Port Bypass	FC-AL-2	K28.5 – D9.0 – AL_PD – AL_PS
LPBfx	Loop Port Bypass all	FC-AL-2	K28.5 – D9.0 – D31.7 – AL_PS
LPEyx	Loop Port Enable	FC-AL-2	K28.5 – D5.0 – AL_PD – AL_PS
LPEfx	Loop Port Enable all	FC-AL-2	K28.5 – D5.0 – D31.7 – AL_PS

Primitive Sequences shall be transmitted continuously while the condition exists. A detailed description of FC_Port state changes relative to Primitive Sequence reception and transmission is given in clause 7. When a Primitive Sequence is received and recognized, depending on the state of the FC_Port, a corresponding Primitive Sequence or Idles shall be transmitted in response as defined in clause 7.

A Primitive Sequence transmitted by an PN_Port shall be received and recognized by the locally attached Fx_Port, but not transmitted through the Fabric.

Recognition of a Primitive Sequence shall require consecutive detection of three instances of the same Ordered Set without any intervening data indications from the receiver logic (FC-1).

5.3 64B/66B transmission code

5.3.1 Overview

An FC-0 standard (e.g., FC-PI-5) may specify the use of the 64B/66B transmission code as its frame transfer transmission code.

The 64B/66B transmission code specified by this standard treats a stream of words and Special Functions in pairs, each pair being encoded as a 66-bit Transmission Word.

NOTE 1 - The IEEE 802.3-2015 specification of 64B/66B references as “blocks” what this standard references as “Transmission Words”.

A stream of 64B/66B Transmission Words on a link may be further encoded to provide Forward Error Correction (i.e., FEC). The use of FEC is negotiated using the transmitter training (see 5.6). How an FC_Port determines to request use of FEC is not within the scope of this standard.

If the FC_Ports on a link determine to use FEC, the streams of 64B/66B Transmission Words in both directions on the link shall be encoded as specified in 5.3 and then further encoded as specified in subclause 74.7 and subclause 74.10 of IEEE 802.3-2015. If the FC_Ports on a link determine not to use FEC, the streams of 64B/66B Transmission Words in both directions on the link shall be encoded as specified in 5.3.

5.3.2 64B/66B Transmission Word format

All 64B/66B Transmission Words consist of 66 bits. Transmission Words are either data Transmission Words or control Transmission Words (see 5.3.5 and 5.3.6). The first two bits of a Transmission Word are the synchronization header, and are set to either 01h or 10h. The remaining 64 bits of the Transmission Word are the output of a scrambler (see 5.3.3) applied to the Transmission Word body. The Transmission Word body is eight bytes that represent a pair of words and/or Special Functions. See figure 10.

NOTE 2 - The IEEE 802.3-2015 specification of 64B/66B references as “block payload” what this standard references as “Transmission Word body”.

Since the Transmission Word body is passed through the scrambler and the synchronization header is not passed through the scrambler, the synchronization header is the only position in the Transmission Word that always contains a transition. This feature of the code is used to obtain Transmission Word Synchronization (see 6.4).

A 64B/66B Transmission Word shall be transmitted so that each bit in the Transmission Word is transmitted before all more significant bits in the Transmission Word.

NOTE 3 - The intention is that the resulting transmitted bit sequence for Fibre Channel 64B/66B transmission coding is the same as 10GBASE-R PCS (see IEEE 802.3-2015 clause 49). IEEE 802.3-2015 uses diagramming conventions that differ from those of this standard in certain ways: Less significant bits within a byte are shown to the left of more significant bits, and bytes to be transmitted earlier are identified with less significant bits than bytes to be transmitted later. In order to provide transition from the conventions of this standard to the conventions of IEEE 802.3-2015, bit ordering designations within the 64B/66B Transmission Word body and Transmission Word shown in this standard follow the conventions of IEEE 802.3-2015, and are different from those used by the remainder of this standard.

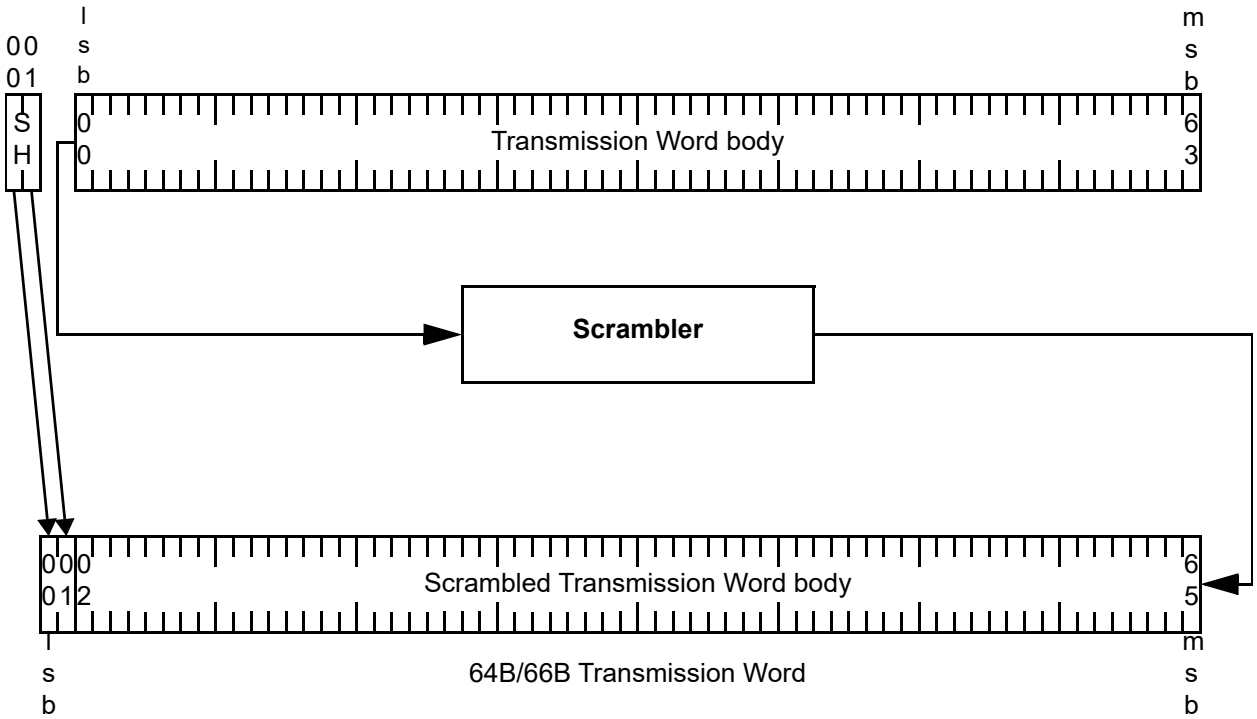

Key:

SH: Synchronization Header

Figure 10 - 64B/66B Transmission Word composition

5.3.3 64B/66B scrambling

The most significant 64 bits of a 64B/66B Transmission Word is the body of the Transmission Word, scrambled with a self-synchronizing scrambler. For each Transmission Word body that is to be scrambled, the scrambling process shall be equivalent to this model:

1) serialize the bits within the Transmission Word body so that bit 0 of the Transmission Word body is first and each remaining bit of the Transmission Word body follows all less significant bits of the Transmission Word body;
2) scramble the serialized Transmission Word body as specified in IEEE 802.3-2015 subclause 49.2.6; and
3) place the first bit of the scrambled output into bit 2 of the Transmission Word, and place each subsequent bit of scrambled output into a more significant bit position in the Transmission Word than any prior bit of the scrambled output.

For each Transmission Word that is to be descrambled, the descrambling process shall be equivalent to this model:

1) serialize bits 2 through 65 of the Transmission Word so that bit 2 of the Transmission Word is first and each remaining bit of the Transmission Word follows all less significant bits of the Transmission Word;

2) descramble the serialized Transmission Word bits as specified in IEEE 802.3-2015 subclause 49.2.10; and
3) place the first bit of the descrambled output into bit 0 of the Transmission Word body, and place each subsequent bit of descrambled output into a more significant bit position in the Transmission Word body than any prior bit of the descrambled output.

The self-synchronizing scrambler/descrambler does not need to be initialized to any specific state. An implementation should not change the scrambler state or descrambler state when the port state is Active other than in accord with the specified model. If its state is modified other than in accord with the specified model, Invalid Transmission Words may be detected.

5.3.4 Invalid Synchronization Header

If both bits in the Synchronization Header have the same value, the Transmission Word shall cause a code violation to be reported and shall be decoded as two Idle Special Functions.

5.3.5 Data Transmission Words

For a Data Transmission Word, the Synchronization Header shall be set so that the least significant bit is 0 and the most significant bit is 1. A Data Transmission Word body is two successive words of FC-2M level data to transmit. Bits 0-7 of the Data Transmission Word body shall be set to the first byte to be transmitted (i.e., bits 24-31 of the first word of FC-2M level data). Subsequently higher order bytes of the Data Transmission Word body shall be set to successive bytes to be transmitted from the first word of FC-2M level data and then from the second word of FC-2M level data. See figure 11.

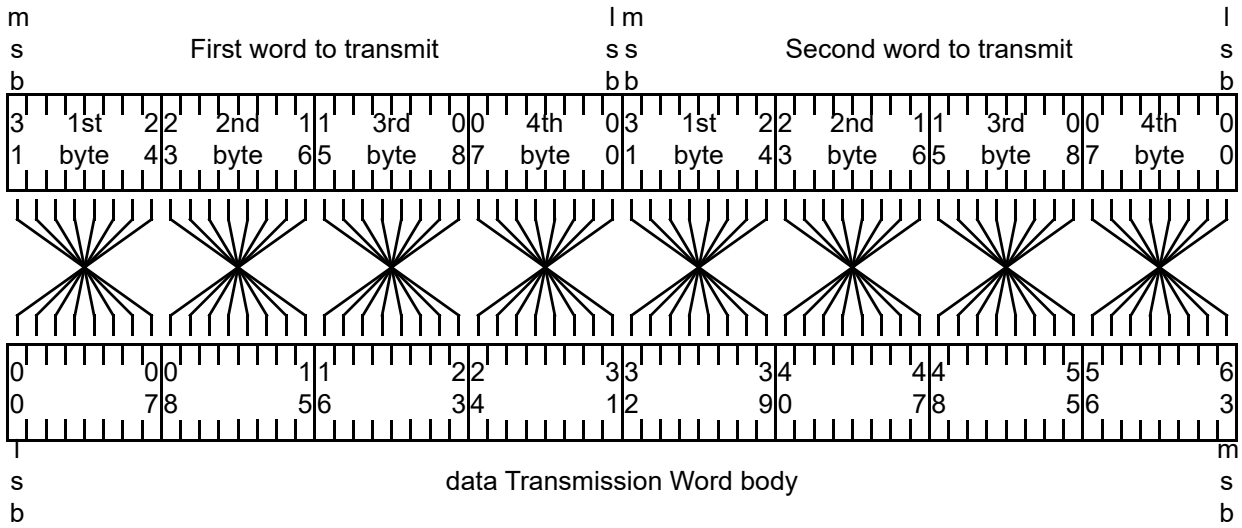

Figure 11 - 64B/66B data Transmission Word body

5.3.6 Control Transmission Words

The Synchronization Header for all control Transmission Words shall be set so that the least significant bit is 1 and the most significant bit is 0. The body of a Control Transmission Word is either two Special Functions or one Special Function and one word. The most significant byte of the body of a Control Transmission Word is the Transmission Word type field. The Transmission Word type field indicates the

format of the remainder of the body of the Transmission Word. The Transmission Word type field shall be set to a value specified in table 10. If a Transmission Word type is decoded that is restricted in table 10, the Transmission Word shall cause a code violation to be reported and shall be decoded as two Idle Special Functions.

Table 10 - Valid 64B/66B Transmission Word type values

Transmission Word type value	Transmission Word content	Reference
1Eh	Idle or LPI Special Function followed by Idle or LPI Special Function; or Receiver Error	5.3.6.1 5.3.6.10
33h	Idle Special Function followed by SOF Special Function	5.3.6.2
B4h	EOF Special Function followed by Idle or LPI Special Function	5.3.6.3
2Dh	Idle Special Function followed by other Special Function	5.3.6.4
4Bh	Other Special Function followed by Idle Special Function	5.3.6.5
55h	Other Special Function followed by other Special Function	5.3.6.6
66h	Other Special Function followed by SOF Special Function	5.3.6.7
78h	SOF Special Function followed by word of data	5.3.6.8
FFh	Word of data followed by EOF Special Function	5.3.6.9
any other value	Restricted for IEEE 802.3-2015, shall not be transmitted	IEEE 802.3-2015

For a control Transmission Word body that includes a representation of a frame delimiter Special Function (i.e., SOF Special Function or EOF Special Function), the Special Function is specified by the Transmission Word type field together with three modifier bytes (see table 13).

Idle Special Functions and receiver detected errors shall be represented as a series of four 7-bit control codes (see table 11). FC_Ports compliant with this standard shall not encode control codes other than the following into a transmission word:

a) Idle (i.e., 00h), or
b) LPI (i.e., 06h), if the FC_Port supports Energy Efficient Fibre Channel.

If a control code value other than Idle or LPI if the FC_Port supports Energy Efficient Fibre Channel, is decoded, the Transmission Word shall cause a code violation to be reported and the restricted control code shall be decoded as an Idle control code.

To communicate LPI Mode (see 10), the LPI control code (i.e., 06h) is sent in place of the Idle control code (i.e., 00h).

Table 11 - Valid control code values

Value (least significant seven bits)	Meaning	Reference
00h	Idle	5.3.7.2
06h	LPI	10
1Eh	Error. This code shall be used only for receiver error reporting (see 5.3.6.10)	5.3.6.10
any other value	Restricted for IEEE 802.3-2015, shall not be transmitted	IEEE 802.3-2015

Other Special Functions shall be indicated by a 4-bit order code (see table 12) together with three modifier bytes (see table 14 and table 15). If a restricted order code value is decoded, the Special Function shall cause a code violation to be reported and shall be decoded as an Idle Special Function.

Table 12 - Valid order code values

Value	Ordered Set	Reference
0h	Primitive Sequence	5.3.7.3
Fh	Primitive Signal	5.3.7.2
any other value	Restricted for IEEE 802.3, shall not be transmitted	IEEE 802.3-2015

5.3.6.1 Idle or LPI followed by Idle or LPI

If the control Transmission Word represents transmission of an Idle or LPI Special Function followed by an Idle or LPI Special Function, the body of the control Transmission Word shall be composed as shown in figure 12. In each field, lower numbered bits represent less significant bits of the value than higher numbered bits.

control Transmission Word body fields shown in FC-2 bit ordering

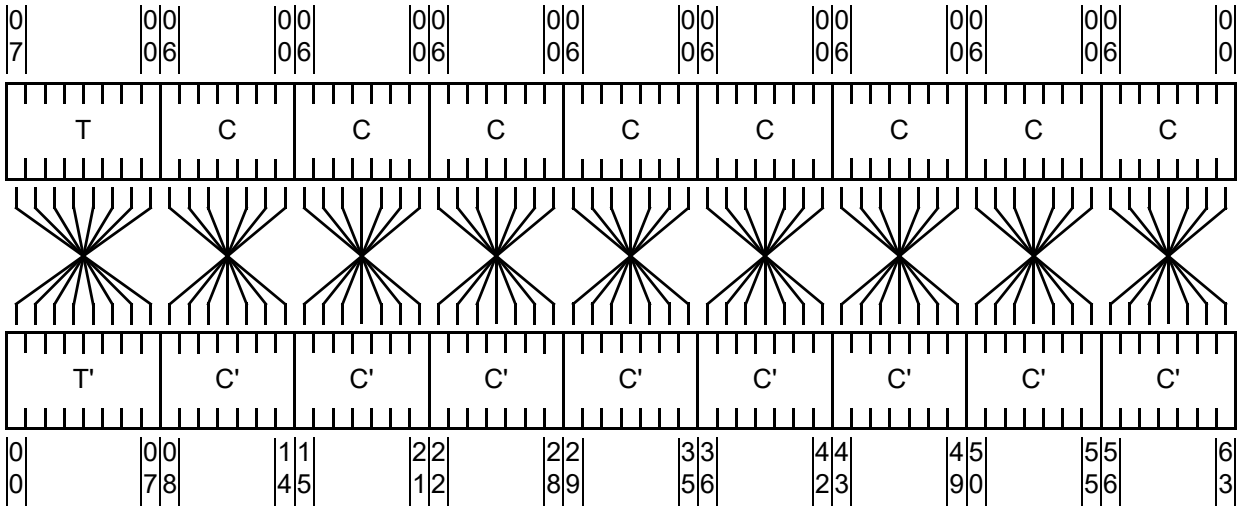

control Transmission Word body fields shown in 64B/66B bit ordering

Key:

T	Transmission Word type value set to 1Eh
C	7-bit control code set to zero (i.e., the Idle control code), or 06h (i.e., the LPI control code)

Each field with a name marked by ' is shown in transmission bit order. It has the same numeric value as the field with the same unmarked name.

Figure 12 - 64B/66B control Transmission Word body: Idle or LPI followed by Idle or LPI

5.3.6.2 Idle followed by SOF

If the control Transmission Word represents transmission of an Idle Special Function followed by an SOF Special Function, the body of the control Transmission Word shall be composed as shown in figure 13. In each field, lower numbered bits represent less significant bits of the value than higher numbered bits.

An Idle followed by SOF Transmission Word shall cause a code violation to be reported and shall be decoded as two Idle Special Functions if the Transmission Word received prior to receiving an Idle followed by SOF Transmission Word:

a) was a data Transmission Word;
b) was any transmission word containing an SOF; or
c) caused a coding violation to be reported.

NOTE 4 - The code violations based on the prior Transmission Word reflect behavior required by the Receive state machine in IEEE 802.3-2015 subclause 49.2.13.3.

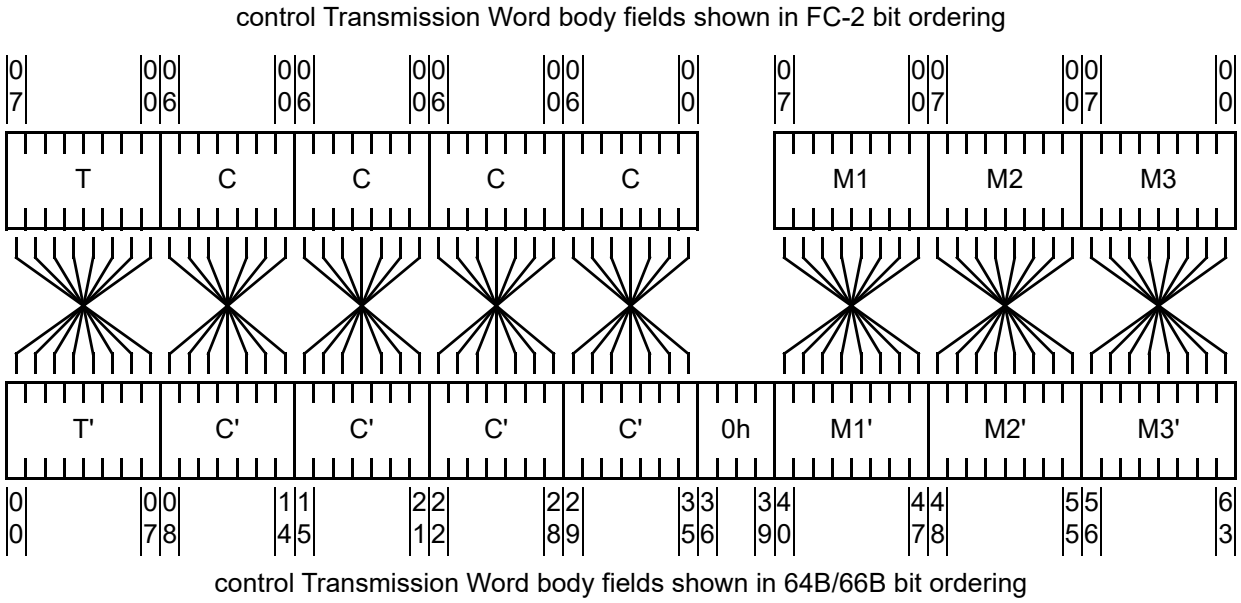

T	Transmission Word type value set to 33h
C	7-bit control code set to zero (i.e., the Idle control code)
M1, M2, M3	Modifier bytes for SOF (see 5.3.7.1)

Each field with a name marked by ' is shown in transmission bit order. It has the same numeric value as the field with the same unmarked name.

Figure 13 - 64B/66B control Transmission Word body: Idle followed by SOF

5.3.6.3 EOF followed by Idle or LPI

If the control Transmission Word represents transmission of an EOF Special Function followed by an Idle or LPI Special Function, the body of the control Transmission Word shall be composed as shown in figure 14. In each field, lower numbered bits represent less significant bits of the value than higher numbered bits.

An EOF followed by Idle or LPI Transmission Word shall cause a code violation to be reported and shall be decoded as two Idle Special Functions if the Transmission Word received following receiving an EOF followed by Idle or LPI Transmission Word:

a) is a data Transmission Word;
b) is any transmission word containing an EOF; or
c) causes a coding violation to be reported.

NOTE 5 - This requires lookahead on encountering an EOF. The code violations based on the following Transmission Word reflect behavior required by the Receive state machine in IEEE 802.3-2015 subclause 49.2.13.3.

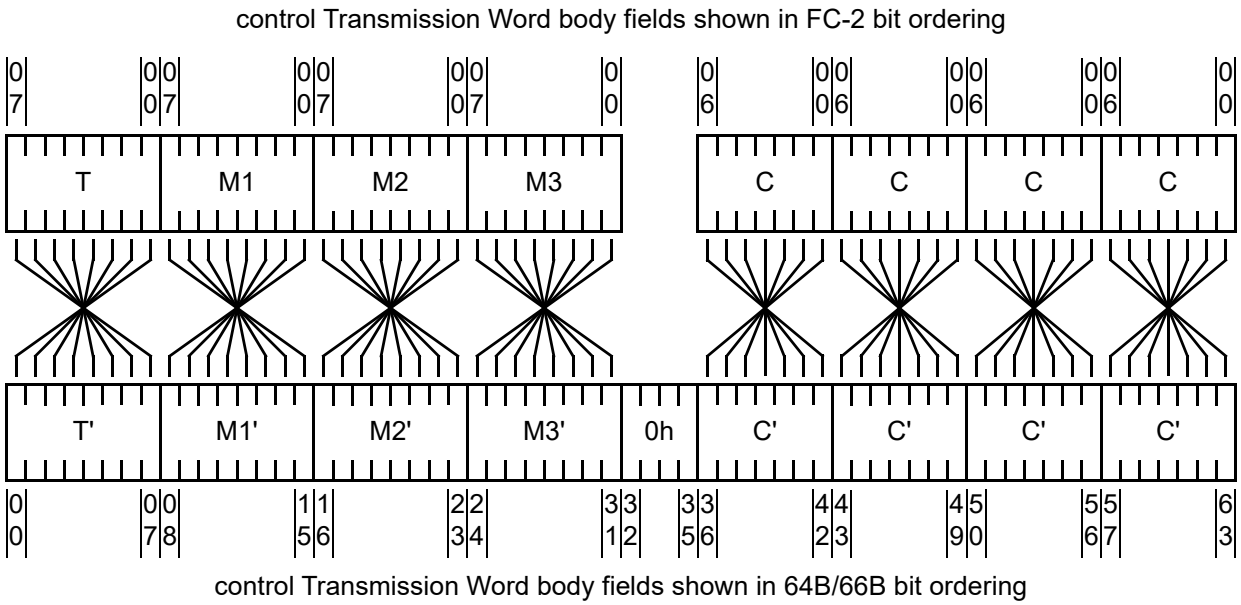

Key:

T	Transmission Word type value set to B4h
M1, M2, M3	Modifier bytes for EOF (see 5.3.7.1)
C	7-bit control code set to zero (i.e., the Idle control code) or 06h (i.e., the LPI control code)

Each field with a name marked by ' is shown in transmission bit order. It has the same numeric value as the field with the same unmarked name.

Figure 14 - 64B/66B control Transmission Word body: EOF followed by Idle or LPI

5.3.6.4 Idle / other Special Function

If the control Transmission Word represents transmission of an Idle Special Function followed by a Special Function other than Idle, an SOF or an EOF, the body of the control Transmission Word shall be composed as shown in figure 15. In each field, lower numbered bits represent less significant bits of the value than higher numbered bits.

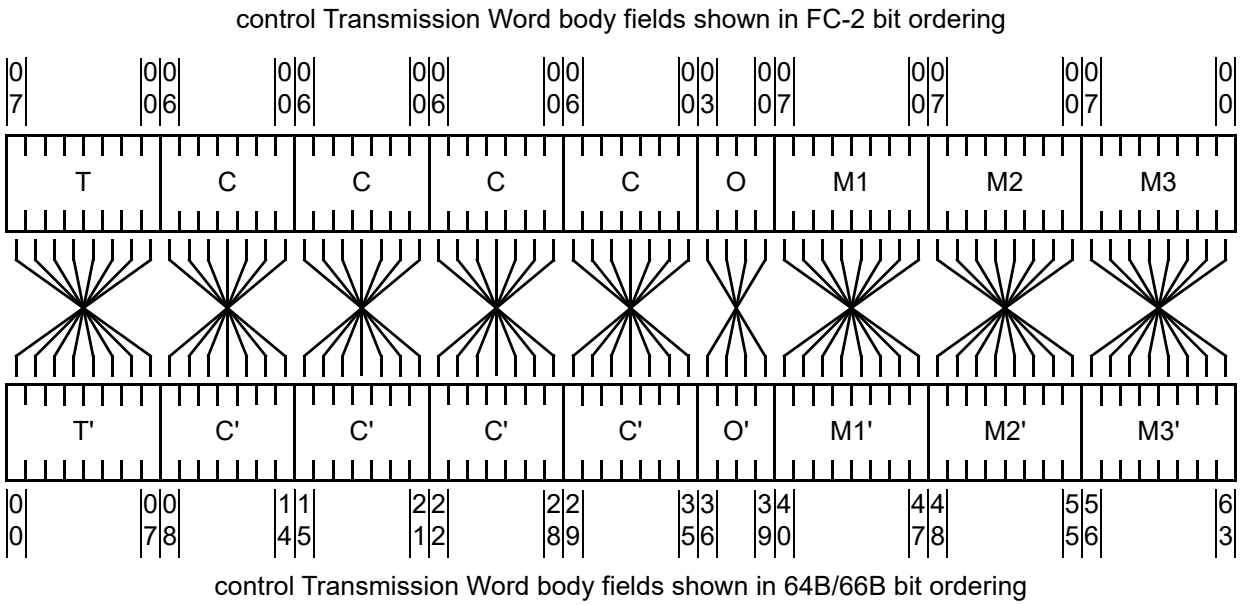

Key:

T	Transmission Word type value set to 2Dh
C	7-bit control code set to zero (i.e., the Idle control code)
O	Order code (see 5.3.7.2 and 5.3.7.3)
M1, M2, M3	Modifier bytes for Special Function (see 5.3.7.2 and 5.3.7.3)

Each field with a name marked by ' is shown in transmission bit order. It has the same numeric value as the field with the same unmarked name.

Figure 15 - 64B/66B control Transmission Word body: Idle / other Special Function

5.3.6.5 Other Special Function / Idle

If the control Transmission Word represents transmission of a Special Function other than Idle, an SOF or an EOF, followed by an Idle Special Function, the body of the control Transmission Word shall be composed as shown in figure 16. In each field, lower numbered bits represent less significant bits of the value than higher numbered bits.

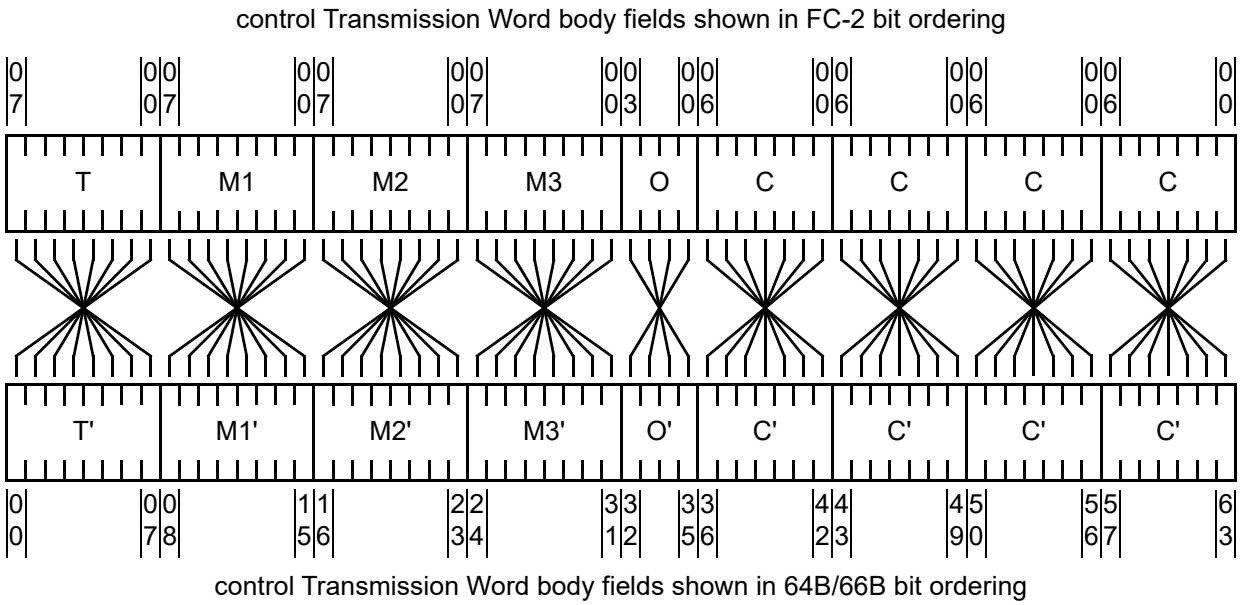

Key:

T	Transmission Word type value set to 4Bh
M1, M2, M3	Modifier bytes for Special Function (see 5.3.7.2 and 5.3.7.3)
O	Order code (see 5.3.7.2 and 5.3.7.3)
C	7-bit control code set to zero (i.e., the Idle control code)

Each field with a name marked by ' is shown in transmission bit order. It has the same numeric value as the field with the same unmarked name.

Figure 16 - 64B/66B control Transmission Word body: other Special Function / Idle

5.3.6.6 Other Special Function / other Special Function

If the control Transmission Word represents transmission of a Special Function other than Idle, an SOF or an EOF followed by another Special Function other than Idle, an SOF or an EOF, the body of the control Transmission Word shall be composed as shown in figure 17. In each field, lower numbered bits represent less significant bits of the value than higher numbered bits.

control Transmission Word body fields shown in FC-2 bit ordering

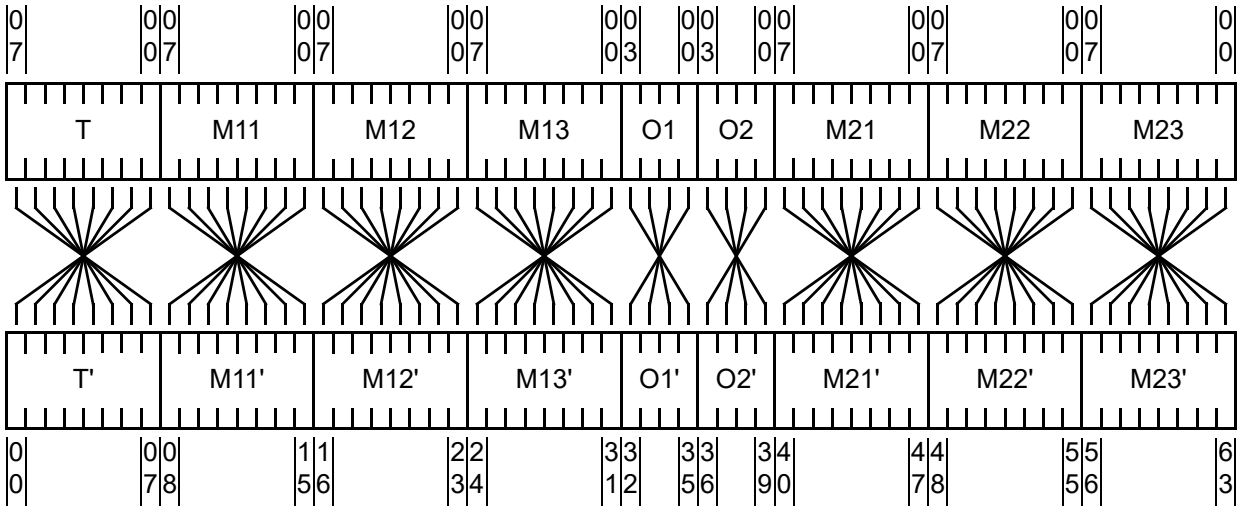

control Transmission Word body fields shown in 64B/66B bit ordering

Key:

T	Transmission Word type value set to 55h
M11, M12, M13	Modifier bytes for first Special Function (see 5.3.7.2 and 5.3.7.3)
O1	Order code for first Special Function (see 5.3.7.2 and 5.3.7.3)
O2	Order code for second Special Function (see 5.3.7.2 and 5.3.7.3)
M21, M22, M23	Modifier bytes for second Special Function (see 5.3.7.2 and 5.3.7.3)

Each field with a name marked by ' is shown in transmission bit order. It has the same numeric value as the field with the same unmarked name.

Figure 17 - 64B/66B control Transmission Word body: two other Special Functions

Special Functions adjacent to Primitive Sequence Special Functions shall be transmitted only as allowed by clause 7.

5.3.6.7 Other Special Function / SOF

If the control Transmission Word represents transmission of a Special Function other than Idle, an SOF or an EOF followed by an SOF, the body of the control Transmission Word shall be composed as shown in figure 18. In each field, lower numbered bits represent less significant bits of the value than higher numbered bits.

An Other Special Function/SOF Transmission Word shall cause a code violation to be reported and shall be decoded as two Idle Special Functions if the Transmission Word received prior to receiving an Other Special Function/SOF Transmission Word:

a) was a data Transmission Word;
b) was any transmission word containing an SOF; or
c) caused a coding violation to be reported.

NOTE 6 - The code violations based on the prior Transmission Word reflect behavior required by the Receive state machine in IEEE 802.3-2015 subclause 49.2.13.3.

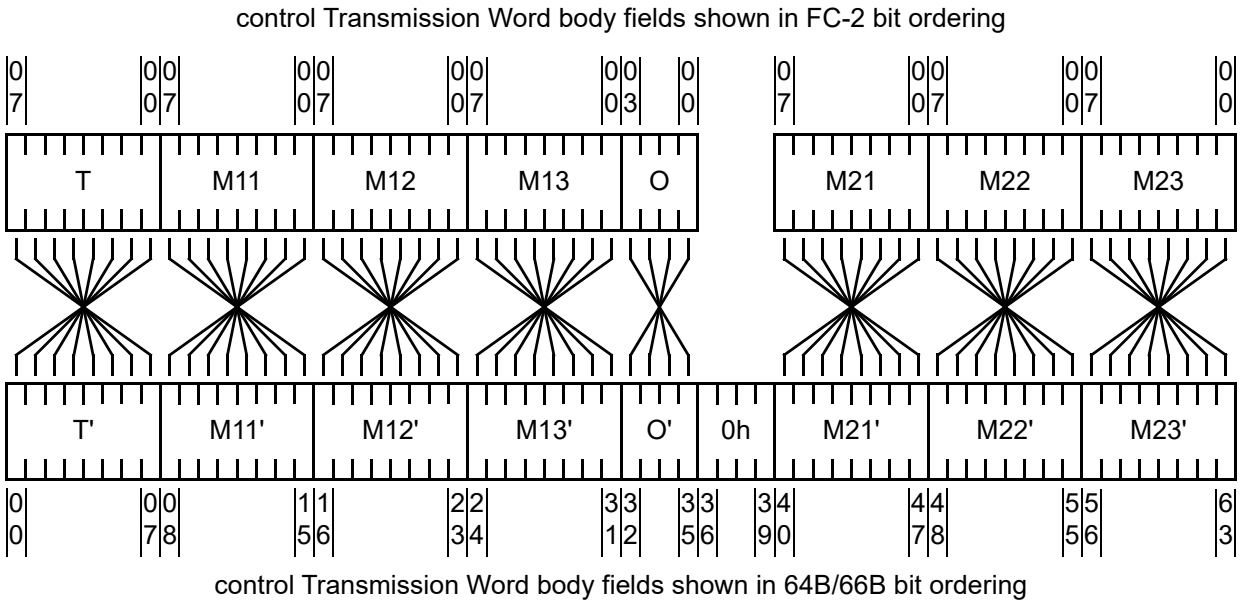

Key:

T	Transmission Word type value set to 66h
M11, M12, M13	Modifier bytes for Special Function (see 5.3.7.2 and 5.3.7.3)
O	Order code for Special Function (see 5.3.7.2 and 5.3.7.3)
M21, M22, M23	Modifier bytes for SOF (see 5.3.7.1)

Each field with a name marked by ' is shown in transmission bit order. It has the same numeric value as the field with the same unmarked name.

Figure 18 - 64B/66B control Transmission Word body: other Special Function / SOF

5.3.6.8 SOF / data

If the control Transmission Word represents transmission of an SOF Special Function followed by a word, the body of the control Transmission Word shall be composed as shown in figure 19. In each field, lower numbered bits represent less significant bits of the value than higher numbered bits.

An SOF/Data Transmission Word shall cause a code violation to be reported and shall be decoded as two Idle Special Functions if the Transmission Word received prior to receiving an SOF/Data Transmission Word:

a) was a data Transmission Word;
b) was any transmission word containing an SOF; or
c) caused a coding violation to be reported.

NOTE 7 - The code violations based on the prior Transmission Word reflect behavior required by the Receive state machine in IEEE 802.3-2015 subclause 49.2.13.3.

control Transmission Word body fields shown in FC-2 bit ordering

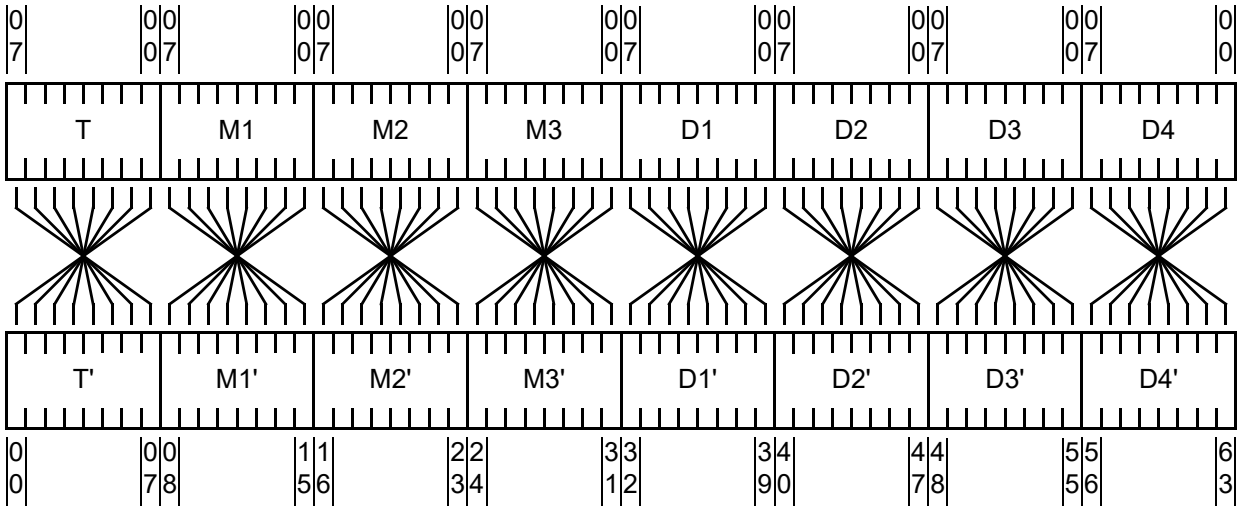

control Transmission Word body fields shown in 64B/66B bit ordering

Key:

T	Transmission Word type value set to 78h
M1, M2, M3	Modifier bytes for SOF (see 5.3.7.1)
D1, D2, D3, D4	First, second, third, and fourth bytes of the word to transmit

Each field with a name marked by ' is shown in transmission bit order. It has the same numeric value as the field with the same unmarked name.

Figure 19 - 64B/66B data Transmission Word body: SOF / data

5.3.6.9 Data / EOF

If the control Transmission Word represents transmission of a word followed by an EOF Special Function, the body of the control Transmission Word shall be composed as shown in figure 20. In each field, lower numbered bits represent less significant bits of the value than higher numbered bits.

A Data / EOF Transmission Word shall cause a code violation to be reported and shall be decoded as two Idle Special Functions if the Transmission Word received following receiving a Data / EOF Transmission Word:

a) is a data Transmission Word;
b) is any transmission word containing an EOF; or
c) causes a coding violation to be reported.

NOTE 8 - This requires lookahead on encountering an EOF. The code violations based on the following Transmission Word reflect behavior required by the Receive state machine in IEEE 802.3-2015 subclause 49.2.13.3.

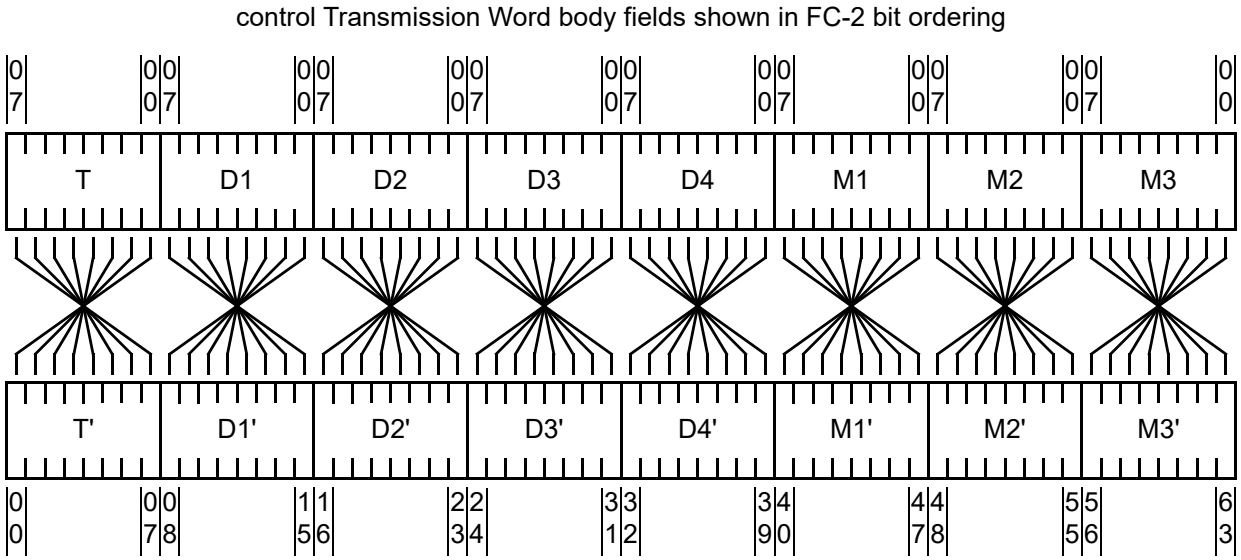

Key:

T	Transmission Word type value set to FFh
D1, D2, D3, D4	First, second, third, and fourth bytes of the word to transmit
M1, M2, M3	Modifier bytes for EOF (see 5.3.7.1)

Each field with a name marked by ' is shown in transmission bit order. It has the same numeric value as the field with the same unmarked name.

Figure 20 - 64B/66B data Transmission Word body: Data / EOF

5.3.6.10 Receiver error reporting

A receiver may substitute an Error Transmission Word for a Transmission Word received in error. An Error Transmission Word shall cause a code violation to be reported and shall be decoded as two Idle Special Functions. A transmitter shall not cause an Error Transmission Word to be sent. The body of the control Transmission Word shall be composed as shown in figure 21. In each field, lower numbered bits represent less significant bits of the value than higher numbered bits.

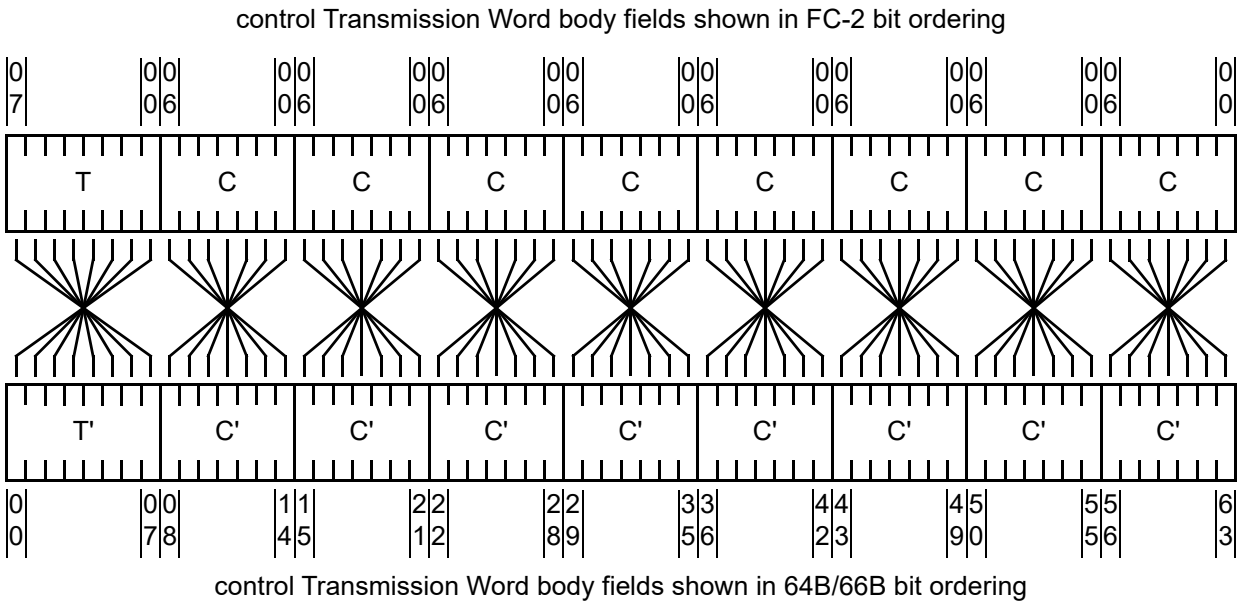

Key:

T	Transmission Word type value set to 1Eh
C	7-bit control code set to the least significant 7 bits of 1Eh (i.e., the Error control code)

Each field with a name marked by ' is shown in transmission bit order. It has the same numeric value as the field with the same unmarked name.

Figure 21 - 64B/66B control Transmission Word body: receiver detected error

5.3.7 64B/66B representation of Special Functions

5.3.7.1 64B/66B frame delimiters

A frame delimiter is a Special Function that immediately precedes or follows the contents of a frame. Separate and distinct Special Functions shall identify the start of a frame and the end of a frame and shall be recognized when a single Special Function is decoded. Frame delimiter Special Functions shall be represented by the combination of the Transmission Word type code (see table 10) and three modifier bytes, as specified in table 13. If the Transmission Word type code specifies that a frame delimiter Special Function is decoded but the three modifier bytes do not appear in table 13, the Special Function shall be treated as an EOF_a.

Table 13 - 64B/66B representation of frame delimiter Special Functions

Abbr.	Frame delimiter	Reference	Modifier Byte 1	Modifier Byte 2	Modifier Byte 3
SOF_{i2}	SOF Initiate Class 2	11.3.7.2.2	B5h	55h	55h
SOF_{n2}	SOF Normal Class 2	11.3.7.3.2	B5h	35h	35h
SOF_{i3}	SOF Initiate Class 3	11.3.7.2.3	B5h	56h	56h
SOF_{n3}	SOF Normal Class 3	11.3.7.3.3	B5h	36h	36h
SOF_{f}	SOF Fabric	FC-SW-7	B5h	58h	58h
EOF_{t}	EOF Terminate	11.3.8.2.2	95h	75h	75h
EOF_{a}	EOF Abort	11.3.8.3.2	95h	F5h	F5h
EOF_{n}	EOF Normal	11.3.8.2.1	95h	D5h	D5h
EOF_{ni}	EOF Normal-Invalid	11.3.8.3.3	8Ah	D5h	D5h

5.3.7.2 64B/66B Primitive Signals

A Primitive Signal is a Special Function for which each instance has meaning independent of neighboring Special Functions.

When the 64B/66B transmission code is used, the Fill Word (see 11.3.2) is either Idle or Low Power Idle, depending on whether Energy Efficient operation (see 10) is used. The Idle Primitive Signal shall be represented as a series of four Idle control codes.

Primitive Signal Special Functions other than the Idle Primitive Signal shall be represented by the combination of the Transmission Word type code (see table 10), an order code (see table 12), and three modifier bytes, as specified in table 14. If a valid order code associated with a series of modifier bytes that is not specified in table 14 is decoded, the order code together with its associated modifier bytes shall be processed as though an Idle Special Function had been decoded in the same position.

Table 14 - 64B/66B representation of Primitive Signal Special Functions

Abbr.	Primitive Signal	Reference	Order code	Modifier Byte 1	Modifier Byte 2	Modifier Byte 3
R_RDY	Receiver_Ready	20.4	Fh	95h	4Ah	4Ah
VC_RDY	Virtual Circuit Ready	FC-SW-7	Fh	F5h	VC_ID	VC_ID
BB_SCs	Buffer-to-Buffer State Change (SOF)	20.4.9	Fh	95h	96h	96h
BB_SCr	Buffer-to-Buffer State Change (R_RDY)	20.4.9	Fh	95h	D6h	D6h
ARB(F1)	Warning Congestion Signal	25	Fh	94h	F1h	F1h
ARB(F7)	Alarm Congestion Signal	25	Fh	94h	F7h	F7h

All FC_Ports shall at a minimum recognize the R_RDY Primitive Signal and the Idle Primitive Signal.

To assure a sufficient number of Fill Words between frames, the originator of any Primitive Signal other than Idle shall precede and follow the Primitive Signal by a minimum of two Fill Words. Because Fill Words may be removed by intermediate transmitters, the number of Fill Words preceding or following a Primitive Signal at a receiver may be reduced to zero.

5.3.7.3 64B/66B Primitive Sequences

Primitive Sequence Special Functions shall be represented by the combination of the Transmission Word type code (see table 10), an order code (see table 12), and three modifier bytes, as specified in table 15. If a valid order code associated with a series of modifier bytes that is not specified in table 15 is decoded, the order code together with its associated modifier bytes shall be processed as though an Idle Special Function had been decoded in the same position.

Table 15 - 64B/66B representation of Primitive Sequence Special Functions

Abbr.	Primitive Sequence	Reference	Order code	Modifier Byte 1	Modifier Byte 2	Modifier Byte 3
NOS (see NOTE)	Not_operational	clause 7	0h	55h	BFh	45h
OLS	Offline	clause 7	0h	35h	8Ah	55h
LR	Link_Reset	clause 7	0h	49h	BFh	49h
LRR	Link_Reset_Response	clause 7	0h	35h	BFh	49h
NOTE	The representation of NOS used in this standard is consistent with the 8B/10B representation, and differs from that used in 10GFC (i.e., a REMOTE FAULT Primitive Sequence)					

The Primitive Sequences specified in table 15 shall be transmitted continuously while the condition exists. A detailed description of FC_Port state changes relative to Primitive Sequence reception and transmission is given in clause 7. When a Primitive Sequence is received and recognized, depending on the state of the FC_Port, a corresponding Primitive Sequence or Idles shall be transmitted in response as defined in clause 7. Primitive Sequences shall be transmitted only as specified in clause 7.

A Primitive Sequence transmitted by a PN_Port and received by a local Fx_Port shall be recognized by the local Fx_Port, but not transmitted through the Fabric.

Recognition of a Primitive Sequence Special Function shall require detection of three consecutive instances of the Primitive Sequence Special Function without any intervening data indications from the receiver logic.

5.4 32GFC 256B/257B transmission code

5.4.1 Overview

An FC-0 standard (e.g., FC-PI-6) may specify the use of the 32GFC 256B/257B transmission code as its frame transfer transmission code. If the 32GFC 256B/257B transmission code is specified, then it shall be:

a) generated as described in 5.4.2;
b) encoded with Reed Solomon coding as described in 5.4.3;
c) scrambled as described in 5.4.4;
d) descrambled as described in 5.4.5;
e) decode with the Reed Solomon decoder as described in 5.4.6; and
f) decoded as described in 5.4.7.

5.4.2 64B/66B to 256B/257B Transcoding

The 256B/257B transmission code specified by this standard operates on 4 consecutive 64B/66B Transmission Words (see 5.3), each group being encoded as a 257-bit Transmission Word.

NOTE 9 - The IEEE 802.3-2015 specification of 256B/257B references as “blocks” what this standard references as “Transmission Words”.

The transcoder constructs a 257-bit Transmission Word from a group of 4 x 66-bit Transmission Words to allocate bandwidth for the parity check symbols added by the Reed-Solomon encoder.

The 257-bit Transmission Word tx_xcoded<256:0> shall be constructed as defined in IEEE 802.3-2015 91.5.2.5 given 4 x 66-bit Transmission Words denoted as tx_coded_j<65:0> where j=0 to 3. The first 5 bits of tx_xcoded<256:0> are not scrambled (i.e., the step that generates tx_scrambled<256:0> is not performed).

Figure 22 shows the 32GFC 256B/257B encoding of four data words.

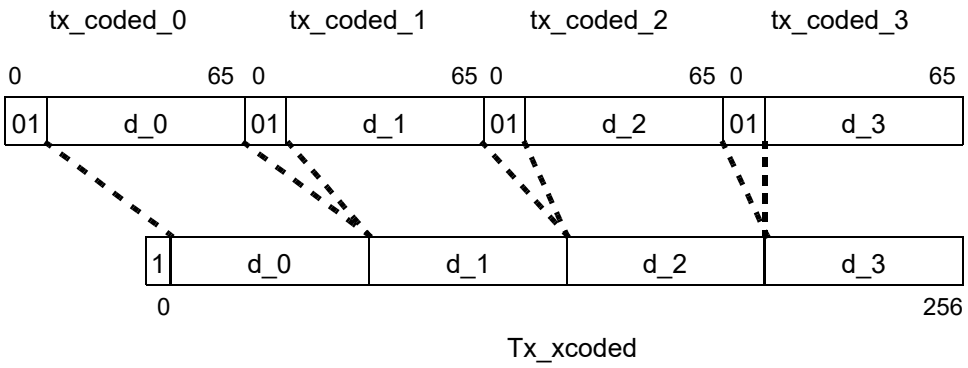

Key:
_x = data from the encoded 64/66b block

Figure 22 - 32GFC 256B/257B encoding of four data words

Figure 23 shows the 32GFC 256B/257B encoding of three data words followed by one control word.

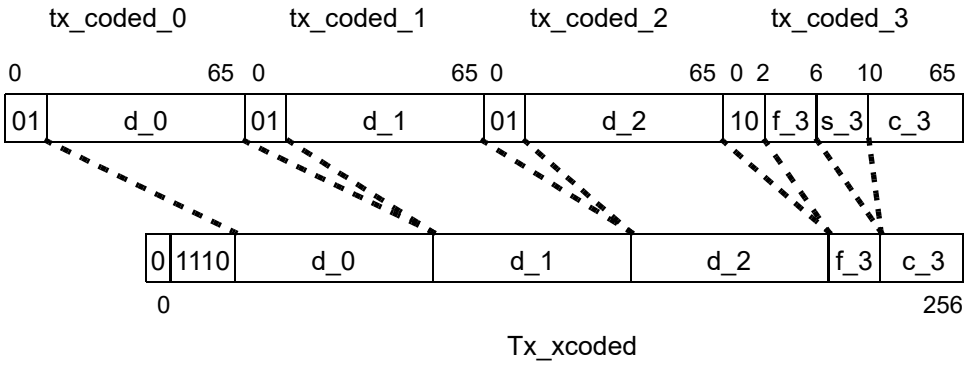

Key:
d_x = data from the encoded 64/66b block
c_x = control codes from the encoded 64/66b block
f_x = first 4 bits of the block type field in he encoded 64/66b block
s_x = second4 bits of the block type field in the encoded 64/66b block

Figure 23 - 32GFC 256B/257B encoding of three data words followed by one control word

Figure 24 shows the 32GFC 256B/257B encoding of one control word followed by three data words.

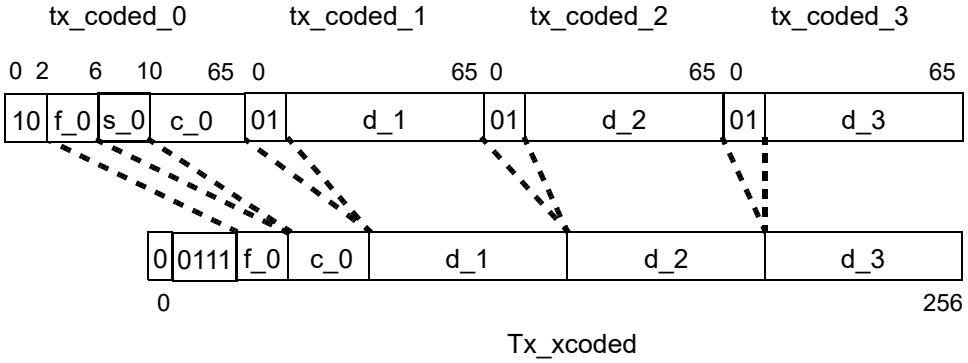

Key:
d_x = data from the encoded 64/66b block
c_x = control codes from the encoded 64/66b block
f_x = first 4 bits of the block type field in the encoded 64/66b block
s_x = second 4 bits of the block type field in the encoded 64/66b block

Figure 24 - 32GFC 256B/257B encoding of one control word followed by three data words

Figure 25 shows the 32GFC 256B/257B encoding of four control words.

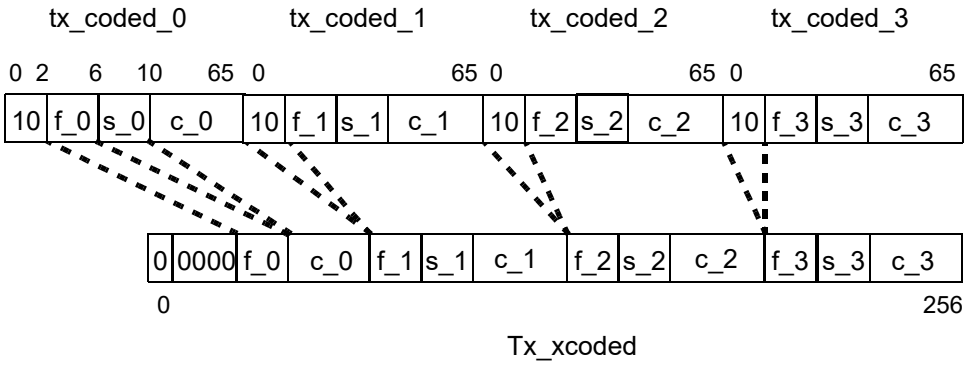

Key:
d_x = data from the encoded 64/66b block
c_x = control codes from the encoded 64/66b block
f_x = first 4 bits of the block type field in the encoded 64/66b block
s_x = second 4 bits of the block type field in the encoded 64/66b block

Figure 25 - 32GFC 256B/257B encoding of four control words

Figure 26 shows the 32GFC 256B/257B encoding of one data word followed by one control word followed by two data words.

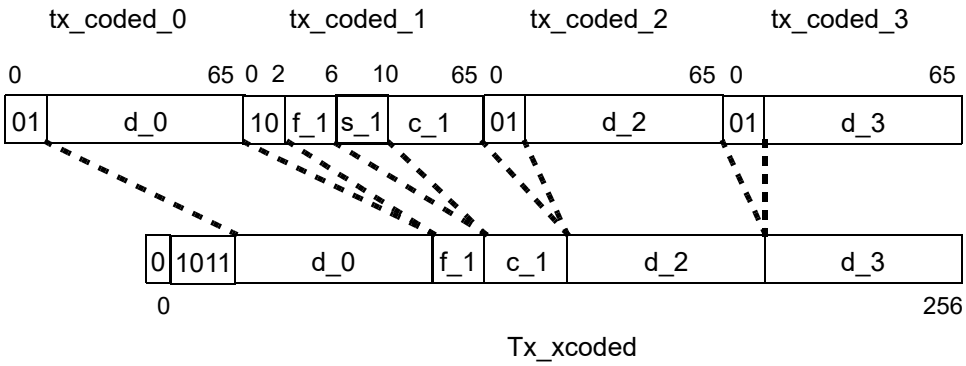

Key:
d_x = data from the encoded 64/66b block
c_x = control codes from the encoded 64/66b block
f_x = first 4 bits of the block type field in the encoded 64/66b block
s_x = second 4 bits of the block type field in the encoded 64/66b block

Figure 26 - 32GFC 256B/257B encoding of one data word, followed by one control word, followed by two data words

A stream of 32GFC 256B/257B Transmission Words on a link shall be further encoded to provide Forward Error Correction (i.e., FEC).

The streams of 32GFC 256B/257B Transmission Words in both directions on the link shall be encoded as specified in 5.4 and then further encoded as specified in subclause 91.5.2.7 of IEEE 802.3-2015.

5.4.3 Reed-Solomon encoder

The RS-FEC sublayer employs a Reed-Solomon code (see bibliography Annex M) operating over the Galois Field GF(2^{10}) (see bibliography Annex M) where the symbol size is 10 bits. The encoder processes k message symbols to generate 2t parity symbols which are then appended to the message to produce a code word of n=k+2t symbols. For the purposes of this clause, a particular Reed-Solomon code is denoted RS(n, k).

The RS-FEC sublayer shall implement RS(528, 514). Each k-symbol message corresponds to twenty 257-bit Transmission Words produced by the transcoder. Each code is based on the generating polynomial given by Equation 91–1 of IEEE 802.3-2015.

5.4.4 Scrambler

Each RS-FEC code word is scrambled with a known sequence to randomize the 257-bit Transmission Word headers and to enable robust code word synchronization at the receiver (i.e., ensure that any shifted input bit sequence is not equal to another RS-FEC code word). Scrambling is implemented as modulo 2 addition of the RS-FEC code word and a pseudo-noise sequence 5280 bits in length defined as PN-5280 (see figure 27).

PN-5280 is generated by the polynomial r(x).

$$r(x) = x^{39} + x^{58} + 1$$

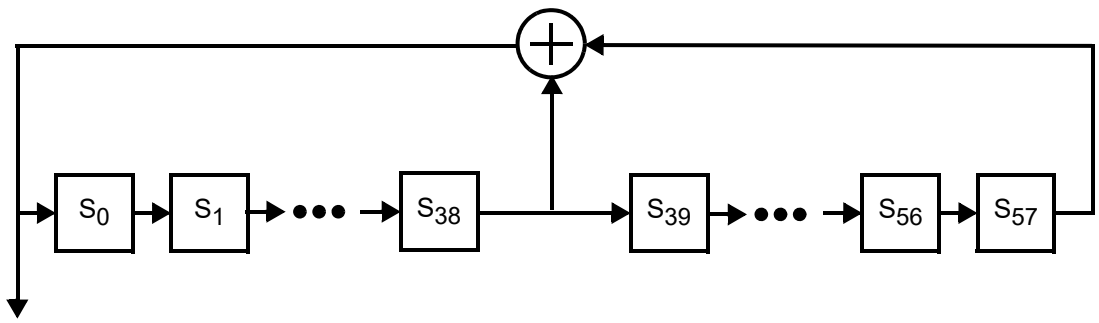

Figure 27 - PN-5280 as a linear feedback shift register

At the start of each RS-FEC code word, the initial state of the pseudo-noise generator is set to:

$S_{57} = 1$

$S_{i-1} = S_i$ XOR 1

(i.e., a binary sequence of alternating 1's and 0's).

5.4.5 Descrambler

Each code word shall be descrambled prior to decoding. Descrambling is implemented as the modulo 2 addition of RS-FEC code word and the same pseudo-noise sequence PN-5280 defined for the scrambler (see 5.4.4).

5.4.6 Reed-Solomon decoder

The Reed-Solomon decoder extracts the message symbols from the code word, correcting them as necessary, and discards the parity symbols. The message symbols correspond to 20 x 257-bit Transmission Words.

The Reed-Solomon decoder shall be capable of correcting any combination of up to t=7 symbol errors in a code word. It shall also be capable of indicating when a code word contains errors but was not corrected (e.g., it contains a number of errors in excess of the error correction capability).

5.4.7 32GFC 256B/257B to 64B/66B transcoder

The transcoder reconstructs a group of 4 x 66-bit Transmission Words from each received 257-bit Transmission Word.

The 4 x 66-bit Transmission Words, denoted as rx_coded_j<65:0> where j=0 to 3, shall be derived from each 257-bit Transmission Word rx_xcoded<256:0> as defined in IEEE 802.3-2015 91.5.3.5. As the first 5 bits of rx_xcoded<256:0> are not scrambled, the step defined in IEEE 802.3-2015 that derives rx_xcoded from rx_scrambled is not performed on those bits.

5.4.8 Transmit Bit Ordering

Transmit bit ordering for 32GFC 256B/257B is as shown in figure 28.

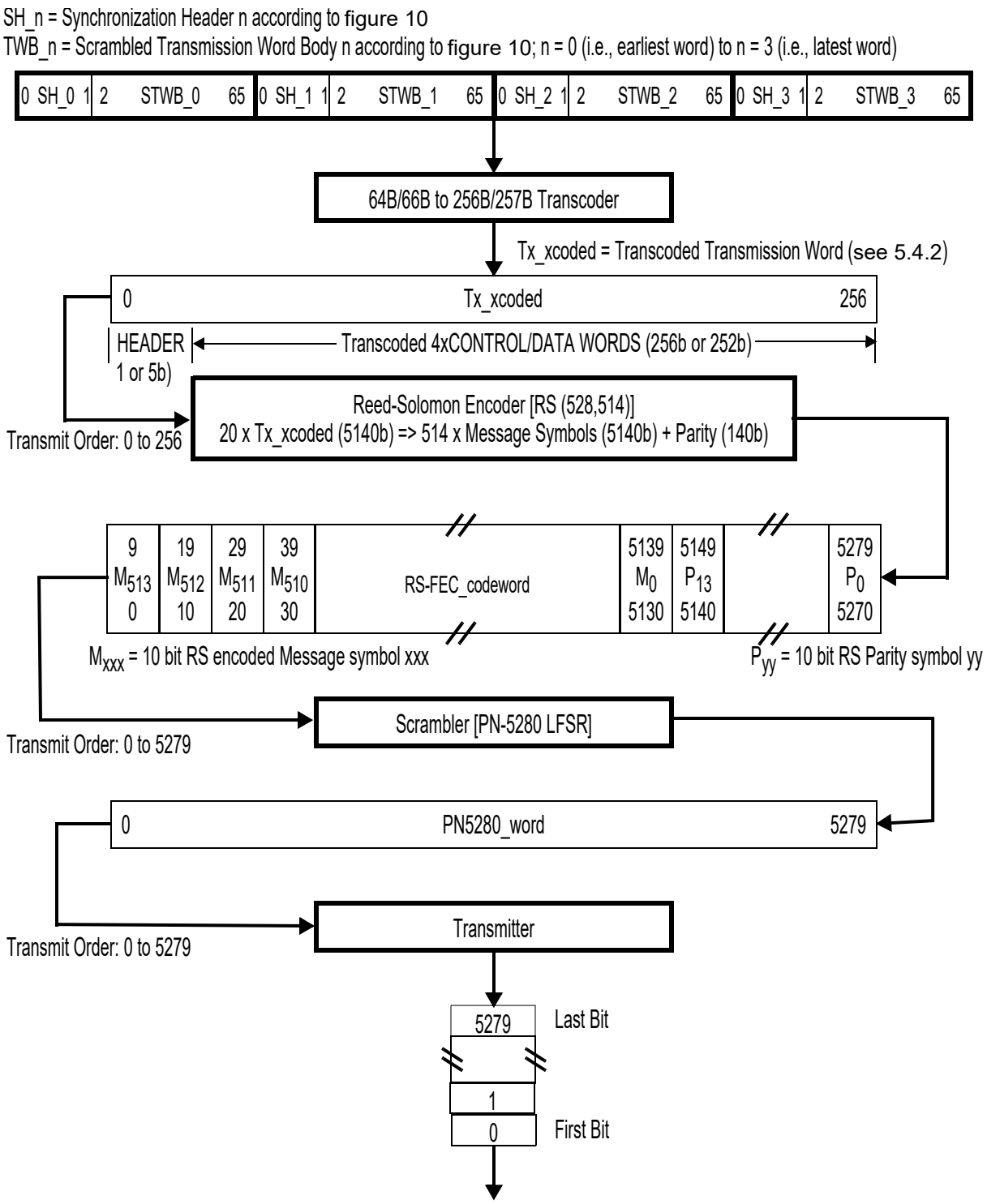

Figure 28 - 32GFC 256B/257B transmit bit ordering

5.4.9 Receive Bit Ordering

Receive bit ordering for 32GFC 256B/257B is as shown in figure 29.

‘

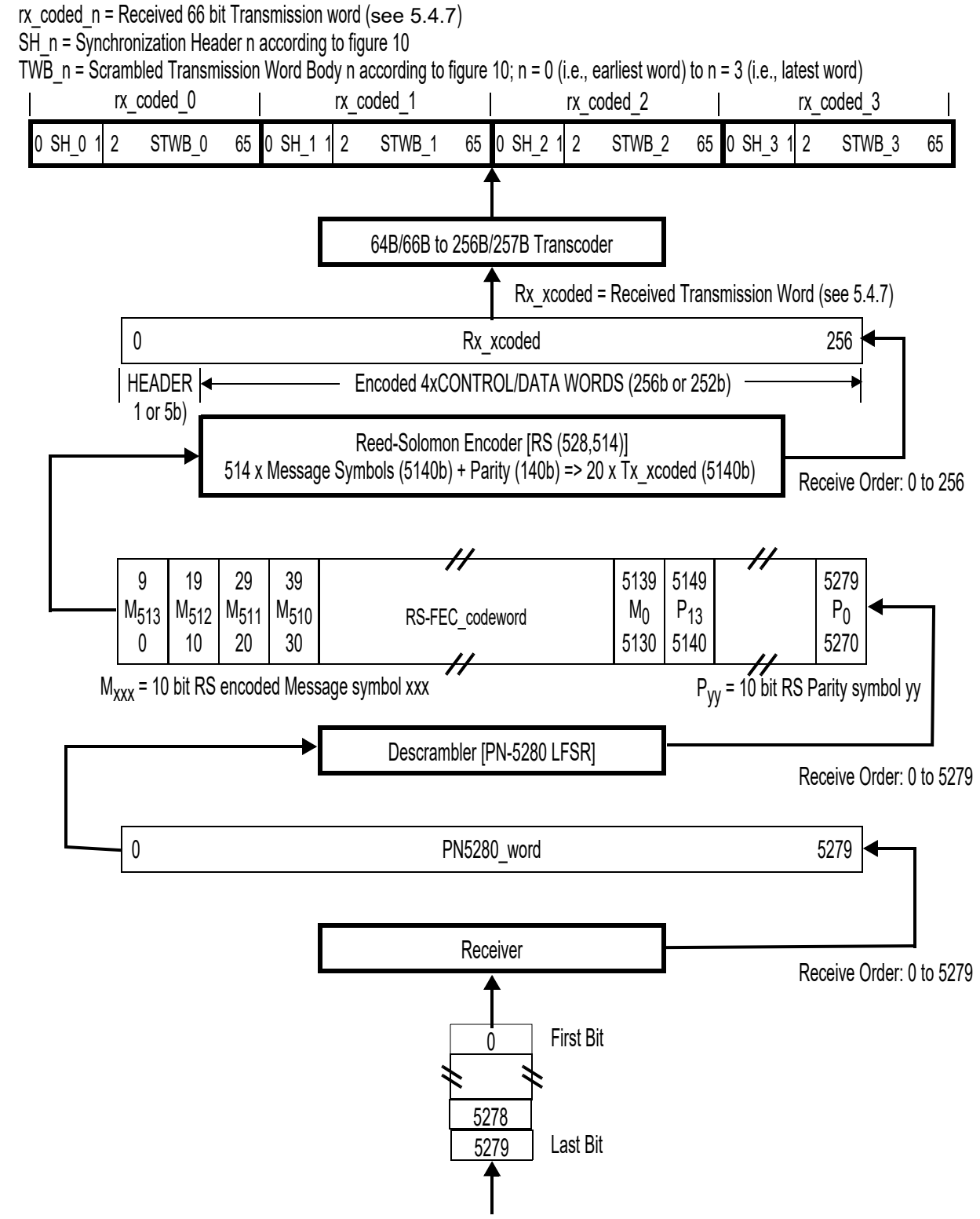

Figure 29 - 32GFC 256B/257B receive bit ordering

5.5 64GFC 256B/257B transmission code

5.5.1 Overview

An FC-0 standard (e.g., FC-PI-7) may specify the use of the 64GFC 256B/257B transmission code as its frame transfer transmission code. If the 64GFC 256B/257B transmission code is specified, then it shall be:

a) generated as described in 5.5.2 and 5.5.3;
b) encoded with Reed Solomon coding as described in 5.5.4;
c) Gray mapped as described in 5.5.5;
d) when enabled, precoded as described in 5.5.6;
e) when enabled, inverse precoded as described in 5.5.7;
f) inverse Gray mapped as described in 5.5.8;
g) decoded with Reed Solomon decoder as described in 5.5.10; and
h) recovered as described in 5.5.11 and 5.5.12.

5.5.2 64B/66B to 64GFC 256B/257B transcoding

64B/66B to 256B/257B transcoding is done as specified in 5.8.2.1.

5.5.3 Alignment marker mapping and insertion

The alignment insertion function inserts a unique data pattern (i.e., Alignment Marker) into the data stream to provide a framing pattern for aligning the FEC code words.

The first 257b of every 1024th 5440b FEC code word carries Alignment Marker information.

The first 256 bits (i.e., 0 to 255) of the Alignment Marker (i.e., AM) vector are composed of AM0, AM4, AM8 and AM12 from Table 82-2 of IEEE 802.3-2015. AMx is the marker for PCS lane number x in Table 82-2. AM0 is the first marker transmitted on the line, followed by AM4, AM8 and AM12. Each octet in the AM vector is transmitted LSB, rightmost bit, to MSB, leftmost bit, starting from the leftmost octet to the rightmost octet. The last bit (i.e., 256) is a pad bit that is always transmitted as zero.

The BIP3 octet of AM0 carries Link degrade information associated with the link degrade function (see 5.5.10.2). The bits of this octet are assigned as follows:

a) BIP3[0]=RD (see 5.5.10.2);
b) BIP3[3:1]=0, Reserved for future use; and
c) BIP3[7:4]=0xA.

The Remote Degrade indicator is in bit 24 of the AM[256:0] vector. The BIP7 octet is the bit-wise inverse of BIP3 but conveys no useful information. As an example, the first 32 bits of the AM0 vector are ordered as follows:

a) 1000_0011_0001_0110_1000_0100_RD000_0101.

For all other markers besides AM0, BIP3=0xAA and BIP7=0x55.

5.5.4 Reed-Solomon encoder

The RS-FEC sublayer employs a Reed-Solomon code (see Annex M) operating over the Galois Field GF(2^{10}) (see Annex M) where the symbol size is 10 bits. The encoder processes k message symbols to generate 2t parity symbols which are then appended to the message to produce a code word of n=k+2t symbols. For the purposes of this clause, a particular Reed-Solomon code is denoted RS(n, k).

The RS-FEC sublayer shall implement RS(544, 514) as defined in IEEE 802.3cd D2.2 134.5.2.7. Each k-symbol message corresponds to twenty 257-bit Transmission Words produced by the transcoder. Each code is based on the generating polynomial given by Equation 91–1 of IEEE 802.3-2015.

5.5.5 Gray mapping

The Gray mapping process shall map consecutive pairs of bits {A, B}, where A is the bit arriving first, to a Gray-coded symbol as follows:

a) {0, 0} maps to 0;
b) {0, 1} maps to 1;
c) {1, 1} maps to 2; and
d) {1, 0} maps to 3.

5.5.6 Precoding

The transmit process shall provide 1/(1+D) mod 4 precoding capability for electrical variants specified in FC-PI-7 and FC-PI-7P.

For each Gray-coded symbol G(*j*), a precoded symbol P(*j*) shall be determined by the following algorithm, where *j* is an index indicating the symbol number:

$$P(j) = (G(j) - P(j-1)) \bmod 4$$

The decision to enable or disable transmitter precoding is determined by the remote receiver during the transmitter training process (see 5.7).

5.5.7 Inverse precoding

The receive process optionally provides inverse precoding for electrical variants specified in FC-PI-7 and FC-PI-7P. When implemented and enabled, for each precoded symbol P(*j*), a Gray-code symbol G(*j*) shall be determined by the following algorithm:

$$G(j) = (P(j) + P(j-1)) \bmod 4$$

When implemented, the decision to enable or disable remote transmitter precoding and receiver inverse precoding is determined by the receiver during the transmitter training process. The method by which the receiver determines whether or not to enable precoding is beyond the scope of this standard.

5.5.8 Inverse Gray mapping

The inverse Gray mapping process shall map Gray-coded PAM4 symbols to pairs of bits {A, B} where A is considered to be the first bit as follows:

a) 0 maps to {0, 0};
b) 1 maps to {0, 1};
c) 2 maps to {1, 1}; and
d) 3 maps to {1, 0}.

5.5.9 Alignment lock

The receive function obtains LOCK to the alignment markers as specified by the FEC synchronization state diagram in IEEE 802.3cd D2.2 figure 91-8, using the variable and counter definitions from IEEE802.3cd 134.5.4 but modified for a single FEC lane operation.

5.5.10 Reed-Solomon decoder

5.5.10.1 Overview

The Reed-Solomon decoder extracts the message symbols from the code word, correcting them as necessary, and discards the parity symbols. The message symbols correspond to 20 x 257-bit Transmission Words.

The Reed-Solomon decoder shall be capable of correcting any combination of up to t=15 symbol errors in a code word. It shall also be capable of indicating when a code word contains errors but was not corrected (e.g., it contains a number of errors in excess of the error correction capability).

5.5.10.2 Link Degrade Signaling

For 64GFC and Single Lane 128GFC links, Link Degrade Signaling can be supported by monitoring errors in the FEC logic. The Link Degrade Logic keeps track of the following parameters:

FEC_Degrade_interval – This is a 32 bit register that specifies the number of RS-FEC code words that make up a Degrade Interval.

RD – Remote Degrade Bit to be sent in the Alignment Marker field.

Degrade_Activate_Threshold – This is a 32 bit register that specifies a symbol error count. The value here controls the threshold used to activate RD.

Degrade_Deactivate_Threshold – This is a 32 bit register that specifies a symbol error count. The value here controls the threshold used to deactivate RD.

Reed-Solomon Decoders count the number of symbol errors detected in all the RS(544,514) code words within the FEC_Degrade_interval. If a codeword is uncorrectable, the number of symbol errors detected is incremented by 16. When the number of symbol errors detected within a FEC_Degrade_interval exceeds the Degrade_Activate_Threshold, RD will be signaled to the remote link partner using a bit in the Alignment Marker. At the end of an interval, if the number of symbol errors is less than the Degrade_Deactivate_Threshold, RD will be de-asserted in the Alignment Marker.

5.5.11 Alignment marker removal

The first 257 message bits in every 1024th codeword is the vector am_rxmapped<256:0> where bit 0 is the first bit received. The specific codewords that include this vector are indicated by the alignment lock function (see 5.5.9).

The vector am_rxmapped shall be removed prior to transcoding.

5.5.12 256B/257B to 64B/66B transcoder

The first five bits of the received block rx_scrambled<256:0>, in reception order, are descrambled so that rx_scrambled<256:0> generates rx_coded<256:0> as follows:

a) set rx_coded<4:0> to the result of the bit wise Exclusive-OR of rx_scrambled<4:0> and rx_scrambled<12:8>; and
b) set rx_coded<256:5> to rx_scrambled<256:5>.

Next, a group of four 66 bit transmission words are constructed from each received 257 bit transmission word as specified in 5.4.7.

5.5.13 Transmit Bit Ordering

Transmit bit ordering for 64GFC 256B/257B is as shown in figure 30.

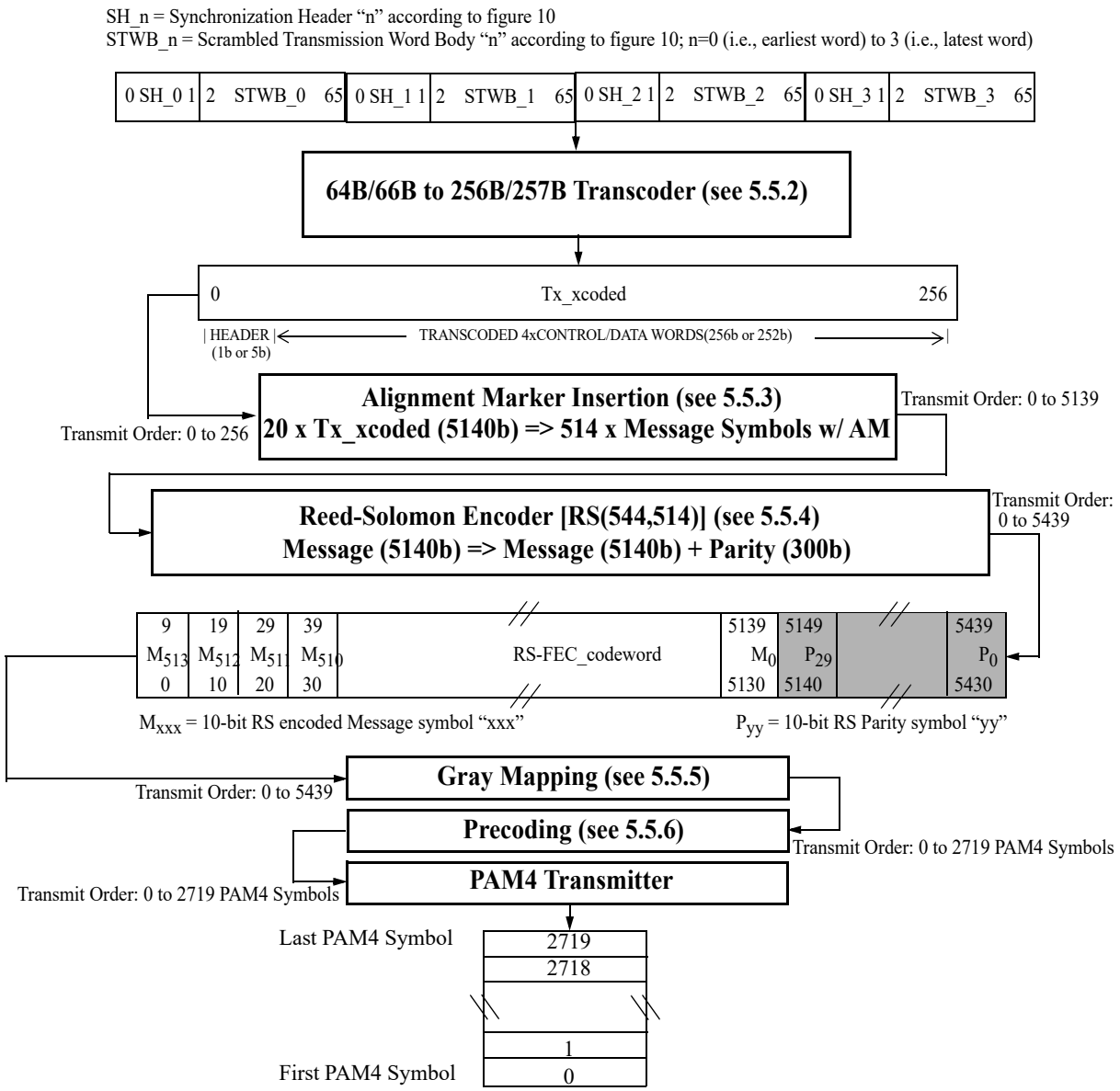

Figure 30 - 64GFC 256B/257B transmit bit ordering

5.5.14 Receive Bit Ordering

Receive bit ordering for 64GFC 256B/257B is as shown in figure 31.

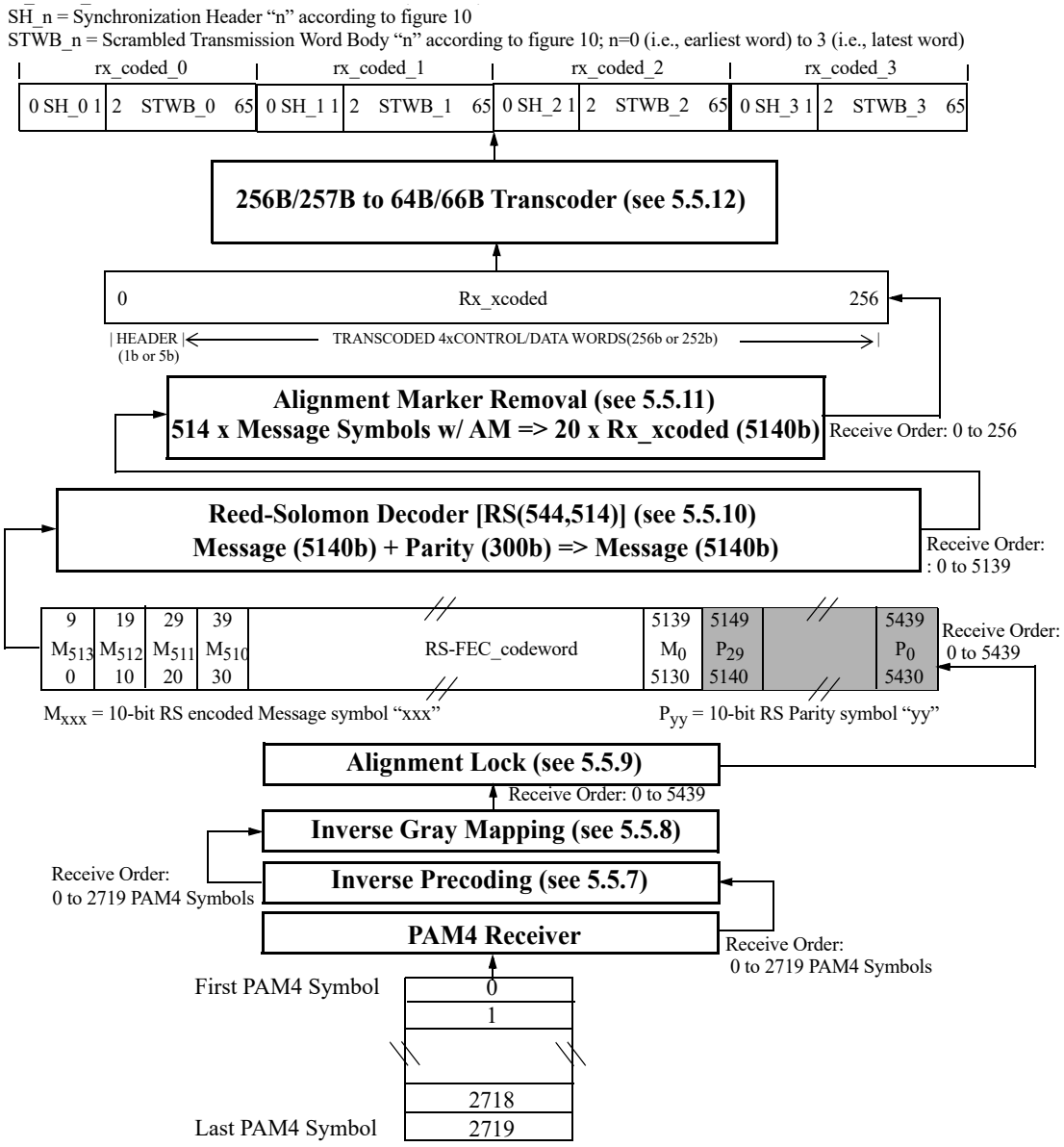

Figure 31 - 64GFC 256B/257B receive bit ordering

5.6 Transmitter Training Signal for LSN and 16GFC/32GFC Transmitter Training

5.6.1 Overview

An FC-0 standard (e.g., FC-PI-5) may specify the use of the Transmitter Training Signal. The Transmitter Training Signal shall not be used for communication of Fibre Channel frames.

The Transmitter Training Signal is a transmission code that enables active feedback from a receiver to a transmitter to assist in adapting the transmitter to the characteristics of the link that connects them. Adjustable transmitter coefficients are supported. The use and effect of each coefficient is specified in FC-PI-x. It is expected that two FC_Ports on a link will concurrently send the Transmitter Training Signal allowing each FC_Port to evaluate the received signal quality and recommend adjustments to the transmitter of the other FC_Port. The Transmitter Training Signal may be sent to communicate information without doing transmitter training.

The Transmitter Training Signal allows enabling of Forward Error Correction (FEC) (see 5.3). FEC is optional for 16GFC and mandatory for 32GFC. FEC negotiation is not performed for 32GFC links and 128GFC links (i.e., four parallel lanes of 32GFC in each direction). The Transmitter Training Signal allows enabling parallel lane support (see table 17) by setting Training Frame Control field bit 10 to one, if a lane is capable of running at 32GFC speeds.

The Transmitter Training Signal shall be a repeating series of Transmission Words, each containing two elements (see figure 32):

1) A Training Frame (see 5.6.2), which carries recommended adjustments to the transmitter of the receiving FC_Port based on the quality of the signal detected at the receiver of the sending FC_Port. The information in the Training Frame is encoded so as to increase its likelihood of reliable communication when the transmitter is not optimally adjusted for the link; and
2) A Training Pattern (see 5.6.3), which allows the receiving FC_Port to formulate recommended adjustments to the transmitter of the sending FC_Port. The Training Pattern is encoded so as to challenge the ability to reliably recover it when the transmitter is not optimally adjusted for the link.

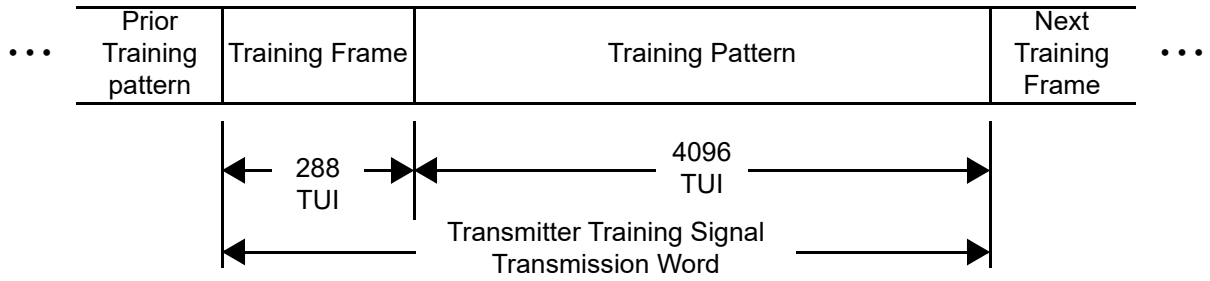

Figure 32 - Transmitter Training Signal

The Transmitter Training Signal allows enabling of either Single Reed-Solomon or Interleaved Reed-Solomon and either Bit Interleaving or Symbol Forwarding for 128GFC. Although the default setting for 128GFC is Interleaved Reed-Solomon with Bit Interleaving (i.e., bit 9:8 = 00), a 128GFC device shall support non-interleaved (i.e., Single Reed-Solomon) and Symbol Forwarding options.

For 128GFC links, the following transmission options are available and are negotiated during Link Speed Negotiation. Table 16 is a resolution table that defines the transmission code that will be used. For either Control bits 9 and 8, if set to 0, it has the highest priority. If either 128GFC ports request the high priority option, both attached 128GFC ports shall operate in that mode.

Table 16 - FEC transmission code

Bit	Sent	Received	Option
9	1	1	Single Reed-Solomon
9	1	0	Interleaved Reed-Solomon
9	0	1	Interleaved Reed-Solomon
9	0	0	Interleaved Reed-Solomon
8	1	1	Symbol Forwarding
8	1	0	Bit Interleaving
8	0	1	Bit Interleaving
8	0	0	Bit Interleaving

5.6.2 Training Frame

The Training Frame is the element of a Transmitter Training Signal that communicates training information from a receiver to a transmitter. A Training Frame comprises a 32 TUI frame marker followed by a 128 TUI Control field followed by a 128 TUI Status field (see figure 33).

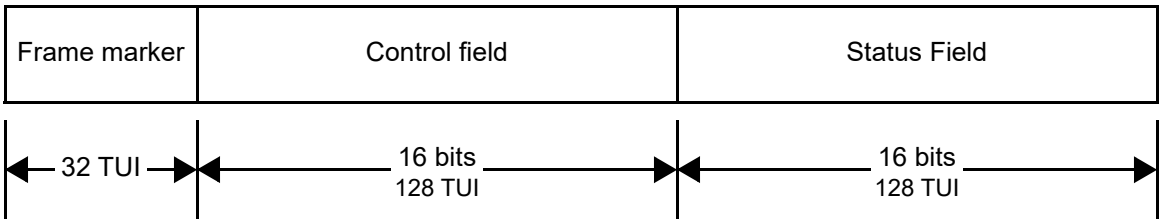

NOTE Each bit of information in the Control field and the Status field is differential Manchester coded in an 8 TUI interval.

Figure 33 - Training Frame format

The Training Frame is intended to communicate information if the transmitter is not optimally adjusted for the link and the selected link speed. The Training Frame also carries information as to whether the physical interface supports parallel lanes and whether FEC is supported. Information in the Training Frame shall be encoded using differential Manchester coding at one eighth the nominal bit rate of the selected link speed (see figure 34).

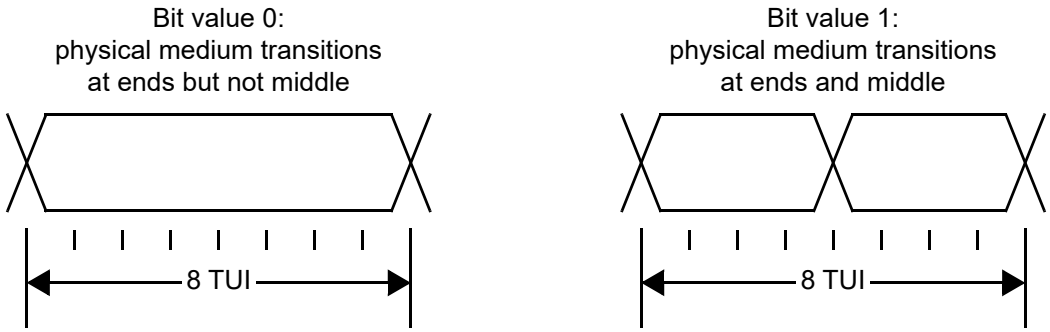

NOTE Each bit of information in the Control field and the Status field is differential Manchester coded in an 8 TUI interval.

Figure 34 - Differential Manchester coding

The beginning of a Training Frame shall be signaled by a frame marker. A frame marker shall be transmitted by holding the physical medium signal at logical “1” for 16 TUI followed by holding the physical medium at logical “0” for 16 TUI. This is a deliberate violation of one eighth rate differential Manchester coding, and carries no information (see figure 35).

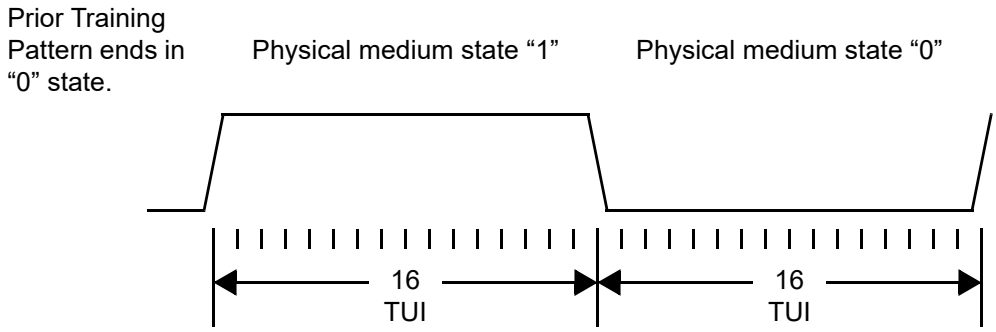

Figure 35 - Frame marker signal

The Control field and the Status field each contain 16 bits of information (i.e., each contain 128 TUI of differential Manchester coded information). The information in these fields shall be transmitted so that more significant encoded information bits are transmitted before less significant encoded information bits. The electrical characteristics of the Transmitter Training Signal are specified in an FC-0 standard, and when indicated in this standard, are indicated informatively.

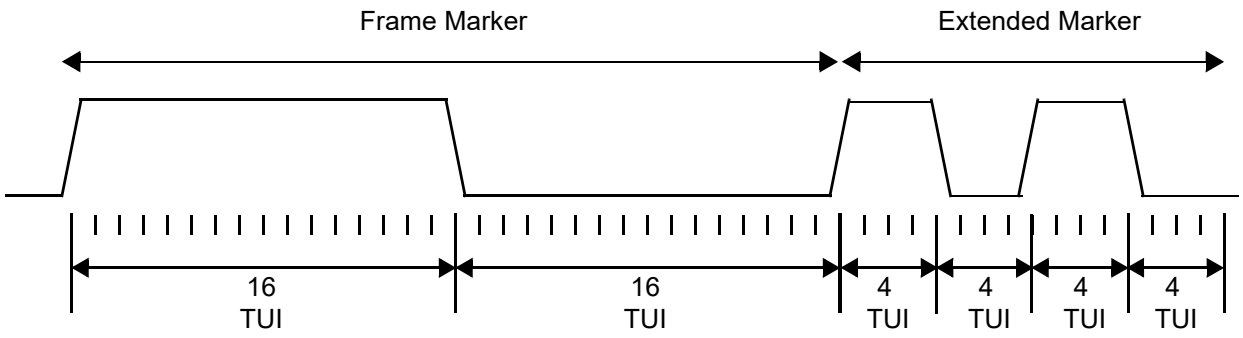

Figure 36 - 32GFC frame marker signal

An extended marker was specified in the Training Frame Control field for 32GFC since the 16GFC Training Frame Control field could be incorrectly recognized as the 32GFC frame marker and a 32GFC port could synchronize on the 16GFC Training Frame Control field. The extended marker is for 16 TUI as shown in figure 36 of alternating highs and lows to uniquely identify 32GFC. 32GFC locks onto the frame marker plus extended marker to preclude the potential of a false lock at 16GFC speeds. The extended marker shall be transmitted after the frame marker whenever a 32GFC Training Frame is transmitted.

Fields in the Control field shall be set as specified in table 17. Fields in the Status field shall be set as specified in table 18. See clause 9 For the use of these fields.

Table 17 - Training Frame Control field

Bits	Field name	Content
15-14	Extended Marker	Set to 11b: Extended marker for 32GFC. Set to 10b: Extended marker for 64GFC. Set to 01b: Extended marker for 128GFC. Set to 00b: for 16GFC.
13	Preset	Set to one: the transmitter should set all coefficients to preset values. Set to zero: no transmitter action advised.
12	Initialize	Set to one: The Transmitter should set all coefficients to initialize values. Set to zero: no transmitter action.
11	FECReq	Set to one: the FC_Port is requesting the use of Forward Error Correction (FEC) (see 5.3) in association with 64B/66B. Set to zero: the FC_Port is directing not to use Forward Error Correction (FEC) in association with 64B/66B.
10	Parallel Lane Support	Set to one: parallel lanes are supported. Set to zero: parallel lanes are not supported.
9	Single Reed-Solomon/ Interleaved	Set to one: Single Reed-Solomon is requested [b] Set to zero: Interleaved Reed-Solomon shall be used
8	Symbol Forwarding/Bit Interleaving	Set to one: Symbol Forwarding is requested [b] Set to zero: Bit Interleaving shall be used
7-6	Reserved	
5-4	C1Upd	Set to 11b: reserved. Set to 10b: transmitter should decrement coefficient 1 one step. [a] Set to 01b: transmitter should increment coefficient 1 one step. [a] Set to 00b: transmitter should not change coefficient 1.
3-2	C0Upd	Set to 11b: reserved. Set to 10b: transmitter should decrement coefficient 0 one step. [a] Set to 01b: transmitter should increment coefficient 0 one step. [a] Set to 00b: transmitter should not change coefficient 0.
1-0	C-1Upd	Set to 11b: reserved. Set to 10b: transmitter should decrement coefficient -1 one step. [a] Set to 01b: transmitter should increment coefficient -1 one step. [a] Set to 00b: transmitter should not change coefficient -1.

[a] See FC-PI-5, FC-PI-6 and FC-PI-6P.
[b] Applies only to LSN. When Transmitter Training, this field is set to 0

Table 18 - Training Frame Status field

Bits	Field name	Content
15	TC	Set to one: transmitter training is complete. Set to zero: request to begin or continue transmitter training.
14	SN	Set to one: the transmitter is using and has not completed Speed Negotiation. Set to zero: the transmitter has completed or did not use Speed Negotiation.
13	FECCap	Set to one: FC_Port has Forward Error Correction (FEC) capability (see 5.3). Set to zero: FC_Port does not have Forward Error Correction (FEC) capability.
12	TF	Set to one: the transmitter is operating with fixed transmitter coefficients. Set to zero: the transmitter coefficients may be trained by the receiver.
11-6	Reserved	
5-4	C1Stat	Set to 11b: transmitter coefficient 1 acknowledges an update that left it at its maximum value. [a] Set to 10b: transmitter coefficient 1 acknowledges an update that left it at its minimum value. [a] Set to 01b: transmitter coefficient 1 acknowledges an update that is complete. [a] Set to 00b: transmitter coefficient 1 is ready for another update.
3-2	C0Stat	Set to 11b: transmitter coefficient 0 acknowledges an update that left it at its maximum value. Set to 10b: transmitter coefficient 0 acknowledges an update that left it at its minimum value. [a] Set to 01b: transmitter coefficient 0 acknowledges an update that is complete. [a] Set to 00b: transmitter coefficient 0 is ready for another update.
1-0	C-1Stat	Set to 11b: transmitter coefficient -1 acknowledges an update that left it at its maximum value. [a] Set to 10b: transmitter coefficient -1 acknowledges an update that left it at its minimum value. [a] Set to 01b: transmitter coefficient -1 acknowledges an update that is complete. [a] Set to 00b: transmitter coefficient -1 is ready for another update.

[a] See FC-PI-5, FC-PI-6, and FC-PI-6P.

5.6.3 Training Pattern

The Training Pattern is the element of a Transmitter Training Signal that allows a receiver to evaluate its ability to achieve reliable Fibre Channel communication across the link on which the Training Pattern is sent. The Training Pattern shall be composed of 4094 TUI of PRBS-11 followed by two TUI of zero. PRBS-11 (see figure 37) shall be equivalent to the output of an 11-bit linear feedback shift register that is initialized to a value that is randomized to a non-zero value for each training frame, and that implements the polynomial

$$x^{11} + x^{9} + 1$$

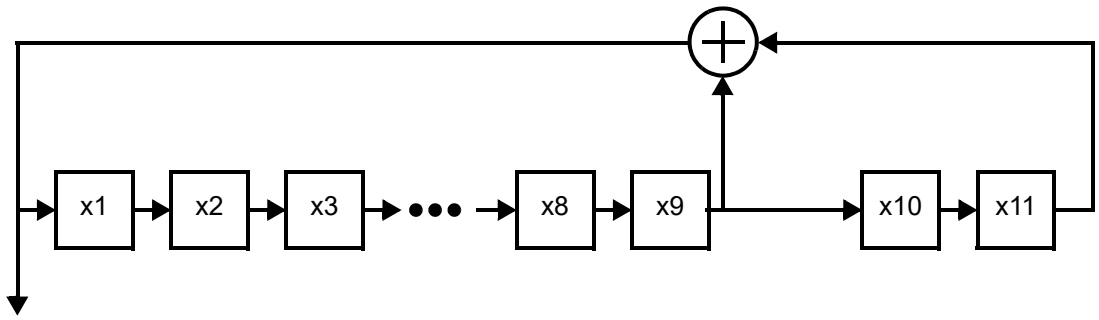

Figure 37 - PRBS-11 as a linear feedback shift register

5.7 Transmitter Training Signal for 64GFC Transmitter Training

5.7.1 Overview

An FC-0 standard (e.g., FC-PI-5) may specify the use of the Transmitter Training Signal. The Transmitter Training Signal shall not be used for communication of Fibre Channel frames.

The Transmitter Training Signal is a transmission code that enables active feedback from a receiver to a transmitter to assist in adapting the transmitter to the characteristics of the link that connects them. Adjustable transmitter coefficients are supported. The use and effect of each coefficient is specified in FC-PI-x. It is expected that two FC_Ports on a link will concurrently send the Transmitter Training Signal allowing each FC_Port to evaluate the received signal quality and recommend adjustments to the transmitter of the other FC_Port. The Transmitter Training Signal may be sent to communicate information without doing transmitter training.

FEC is mandatory for 64GFC and FEC negotiation is not performed using the Transmitter Training Signal. The Transmitter Training Signal allows enabling parallel lane support (see table 17) by setting Training Frame Control field bit 10 to one, if a lane is capable of running at 64GFC speeds.

5.7.2 Training Frame

The training frame structure is specified in IEEE 802.3cd D2.2 136.8.11.1.

The training frame marker is specified in IEEE 802.3cd D2.2 136.8.11.1.1.

Control and status field behavior is specified in IEEE 802.3cd D2.2 136.8.11.1.2. The Control field is specified in table 19.

Table 19 - 64GFC Training Frame Control field

Bits	Field name	Content
15-14	Extended Marker	Set to 11b: Extended marker for 32GFC. Set to 10b: Extended marker for 64GFC. Set to 01b: reserved. Set to 00b: for 16GFC.
13-12	Initial Condi-tion request	Set to 11b: Preset 3. Set to 10b: Preset 2. Set to 01b: Preset 1. Set to 00b: Individual Coefficient Control.
11	Reserved	Transmit as zero, ignore on receipt.
10	Parallel Lane Support	Set to one: parallel lanes are supported. Set to zero: parallel lanes are not supported.
9-8	Modulation and Precoding request	Set to 11b: PAM4 with precoding. Set to 10b: PAM4 Set to 01b: reserved Set to 00b: PAM2.
7-5	Reserved	Transmit as zero, ignore on receipt.
4-2	Coefficient Select	Set to 110b: c(-2) Set to 111b: c(-1) Set to 000b: c(0) Set to 001b: c(1)
1-0	Coefficient Request	Set to 11b: No equalization Set to 10b: Decrement Set to 01b: Increment Set to 00b: Hold

The Status field is specified in table 20.

Table 20 - 64GFC Training Frame Status field

Bits	Field name	Content
15	Receiver Ready	Set to one: training is complete and receiver is ready for data. Set to zero: request for Training to continue.
14	SN	Set to one: transmitter has not completed LSN. Set to zero: transmitter has completed LSN.
13	Reserved	Transmit as zero, ignore on receipt.
12	TF	Set to one: transmitter is operating with Fixed Coefficients. Set to zero: transmitter coefficients may be trained by the receiver.
11-10	Modulation and Precoding Status	Set to 11b: PAM4 with precoding. Set to 10b: PAM4. Set to 01b: reserved Set to 00b: PAM2
9	Receiver frame lock	Set to one: frame boundaries identified. Set to zero: frame boundaries not identified.
8	Initial Condi-tion Status	Set to one: updated. Set to zero: not updated.
7	Parity	Parity bit to provide DC balance.
6	Reserved	Transmit as zero, ignore on receipt.
5-3	Coefficient Select Echo	Set to 110b: c(-2) Set to 111b: c(-1) Set to 000b: c(0) Set to 001b: c(1)
2-0	Coefficient Status	Set to 111b: reserved Set to 110b: coefficient at limit and maximum voltage Set to 101b: reserved Set to 100b: maximum voltage Set to 011b: coefficient not supported Set to 010b: coefficient at limit Set to 001b: updated Set to 000b: not updated

The zero pad is specified in IEEE 802.3cd D2.2 136.8.11.1.4.

5.7.3 Training Pattern

The training pattern is specified in IEEE 802.3cd D2.2 136.8.11.1.3.

5.8 FEC for 128GFC

5.8.1 Overview

This clause specifies how Forward Error Correction (FEC) is implemented on 128GFC ports. FEC usage is mandatory on 128GFC ports. Streams of 64/66B Transmission Words in both directions on a 128G link are encoded by the FEC layer as specified below.

5.8.2 Functional block diagram

A functional block diagram of the 128GFC RS-FEC sub layer is shown in figure 38.

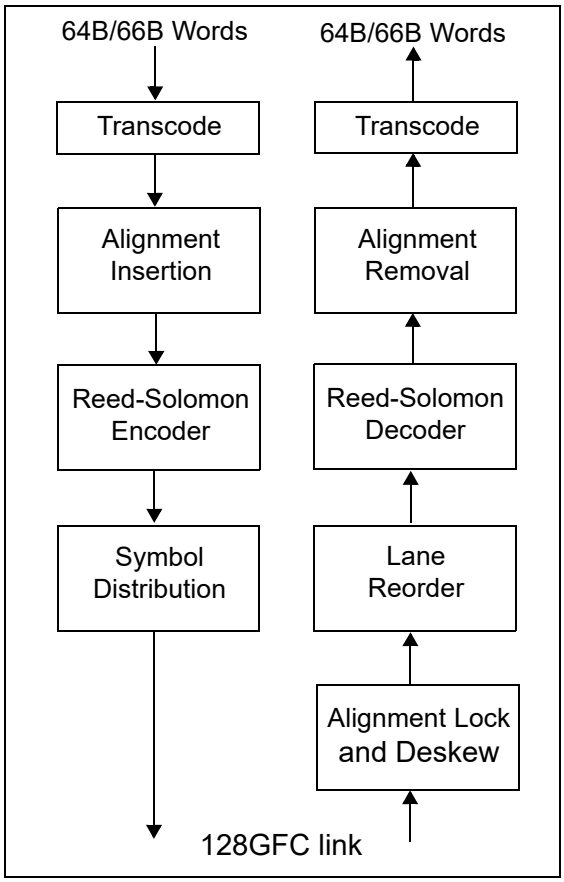

Figure 38 - 128GFC RS-FEC sub layer functional block diagram

5.8.2.1 64B/66B to 256B/257B Transcoder

Transcoding is done as specified in 5.4.2.

In addition, as a final step, the first five bits are scrambled in transmission order as specified in IEEE 802.3-2015 91.5.2.5.

After this step, tx_xcoded<256:0> will yield tx_scrambled<256:0> as follows:

a) Set tx_scrambled<4:0> to the result of the bit wise Exclusive-OR of tx_xcoded<4:0> and tx_xcoded <12:8>; and
b) Set tx_scrambled<256:5> to tx_xcoded<256:5>.

5.8.2.2 Alignment marker mapping and insertion

The alignment insertion function inserts a unique data pattern (i.e., Alignment Marker) for each link into the data stream to enable identification of which of the four links is which FEC lane. This function enables the receiver to map the physical links to logical lanes allowing for random connections of the Transmit links to the Receive links within the group of 4 links, in addition to providing a framing pattern for aligning the FEC code words.

The first 514b of every 4096th FEC code word carries Alignment Marker information.

The alignment marker bit sequence is identical to the first two re-mapped AM blocks specified in Clause 82.2.7 and Clause 91.5.2.6 when replacing the BIP3 field in all four instances of the AM0 blocks with the value 0xCA, the BIP3 for AM4 with 0x9D, the BIP3 for AM5 with 0xD7, the BIP3 for AM6 with 0x6F, and the BIP3 for AM7 with 0xA1. Additionally the first bit of AM8 and AM9 that are part of the sequence is changed from 0->1 to maintain DC balance.

Table 21 shows the data stream that will appear on each of the 4 lanes after the RS symbol distribution of the AM pattern is done. The ‘d’ is the first 6b of data from block that follows the AM pattern. The underlined values are the replaced BIP3 and BIP7 fields in the AM blocks.

Table 21 - 128GFC FEC Alignment Marker

AM bits	Lane3	Lane2	Lane1	Lane0
[39:0]	0011000001	0011000001	0011000001	0011000001
[79:40]	0001011010	0001011010	0001011010	0001011010
[119:80]	0010100010	0010100010	0010100010	0010100010
[159:120]	0011111011	0011111011	0011111011	0011111011
[199:160]	1010010111	1010010111	1010010111	1010010111
[239:200]	0101110111	0101110111	0101110111	0101110111
[279:240]	1110110011	0110100011	0111010011	1101010011
[319:280]	0100010101	0100101010	0001010011	0000011111
[359:320]	0101100110	1100100110	1111000010	0100001001
[399:360]	0100101000	0101011011	0010110101	1010100111
[439:400]	1110101000	1101010110	1010110010	1110000000
[479:440]	1001100110	1101100110	0011110111	1111011011
[513:480]	dddddd1110	0110010000	0100101000	0101100010

5.8.2.3 Reed-Solomon encoder

Reed-Solomon encoding is done as specified in 5.4.3.

5.8.2.4 Symbol distribution

Once the data has been encoded, it is distributed to 4 lanes, in groups of 10 bit symbols.

Symbol distribution is done as specified in IEEE 802.3-2015 91.5.2.8.

5.8.2.5 Transmit bit ordering

Transmit bit ordering is as shown in figure 39.

5.8.2.6 Alignment lock and deskew

The receive function creates 4 bit streams after concatenating the bits received on each lane. It then obtains LOCK to the alignment markers on each lane as specified by the FEC synchronization state diagram in IEEE 802.3-2015 91.5.3.1.

After alignment marker lock is achieved on all four lanes, all inter lane skew is removed as specified by the FEC alignment state diagram in IEEE 802.3-2015 91.5.3.1. The FEC receive function will support a maximum skew of 180ns between lanes and a maximum skew variation of 4ns.

5.8.2.7 Lane reorder

FEC lanes may be received on different lanes of the service interface from which they were originally transmitted.

The FEC receive function shall order the FEC lanes according to the FEC lane number per IEEE 802.3-2015 91.5.3.2.The FEC lane number is defined by the alignment marker that is mapped to each FEC lane.

After all FEC lanes are aligned, deskewed, and reordered, the FEC lanes are multiplexed together in the proper order to reconstruct the original stream of FEC code words.

5.8.2.8 Reed-Solomon decoder

Decoding is done as specified in 5.4.6.

5.8.2.9 Alignment marker removal

The first 514 bits in every 4096 code words are the mapped alignment marker bits. These are removed before sending the data to the transcode block.

5.8.2.10 256B/257B to 64B/66B transcoder

The first five bits of the of the received block rx_scrambled<256:0>, in reception order, are descrambled. Rx_scrambled<256:0> will yield rx_coded<256:0> as follows:

a) Set rx_coded<4:0> to the result of the bit wise Exclusive-OR of rx_scrambled<4:0> and rx_scrambled<12:8>; and
b) Set rx_coded<256:5> to rx_scrambled<256:5>.

Next, a group of four 66 bit transmission words are constructed from each received 257 bit transmission word as specified in 5.4.7.

5.8.2.11 Receive bit ordering

Receive bit ordering is as specified in figure 40.

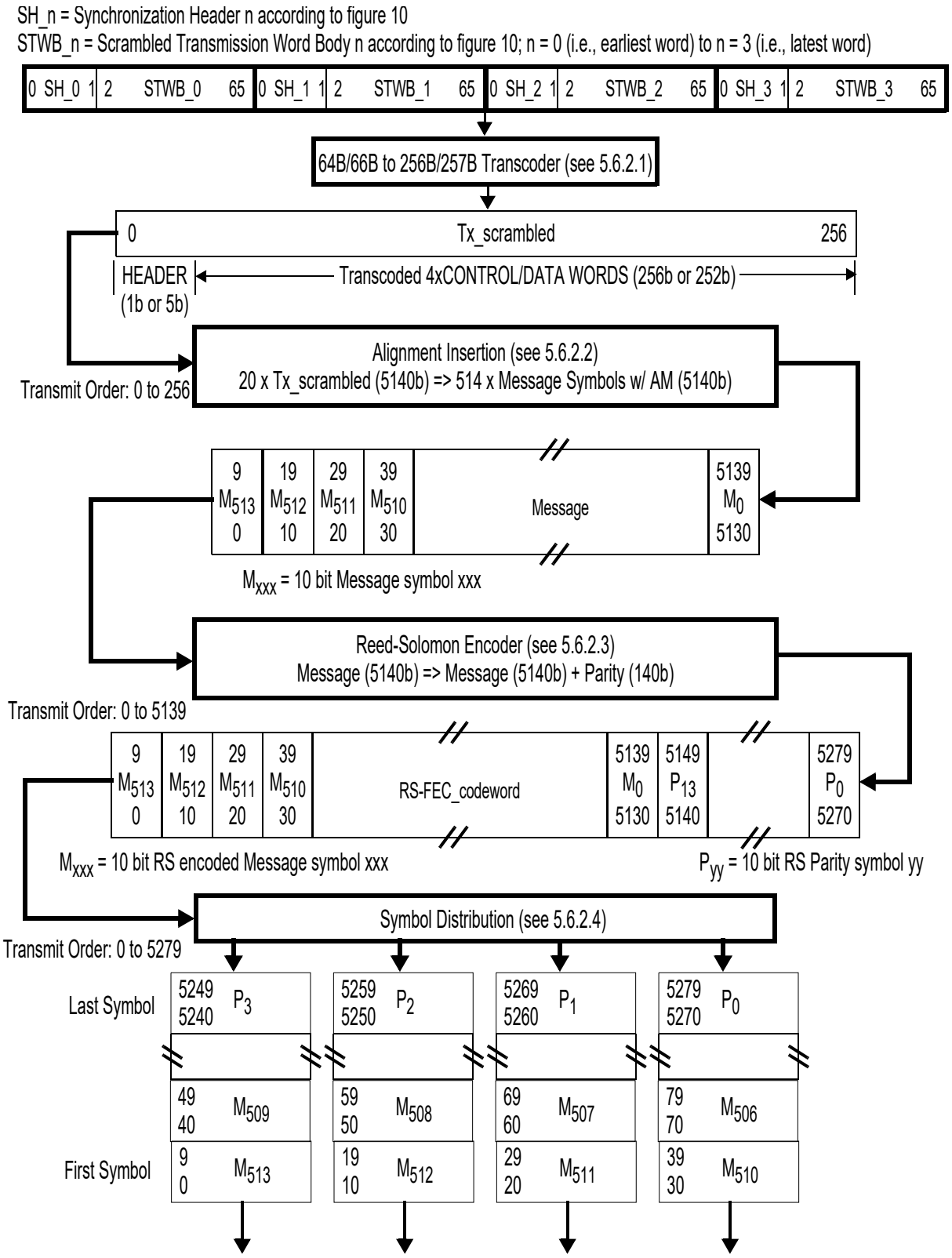

Figure 39 - Transmit bit ordering

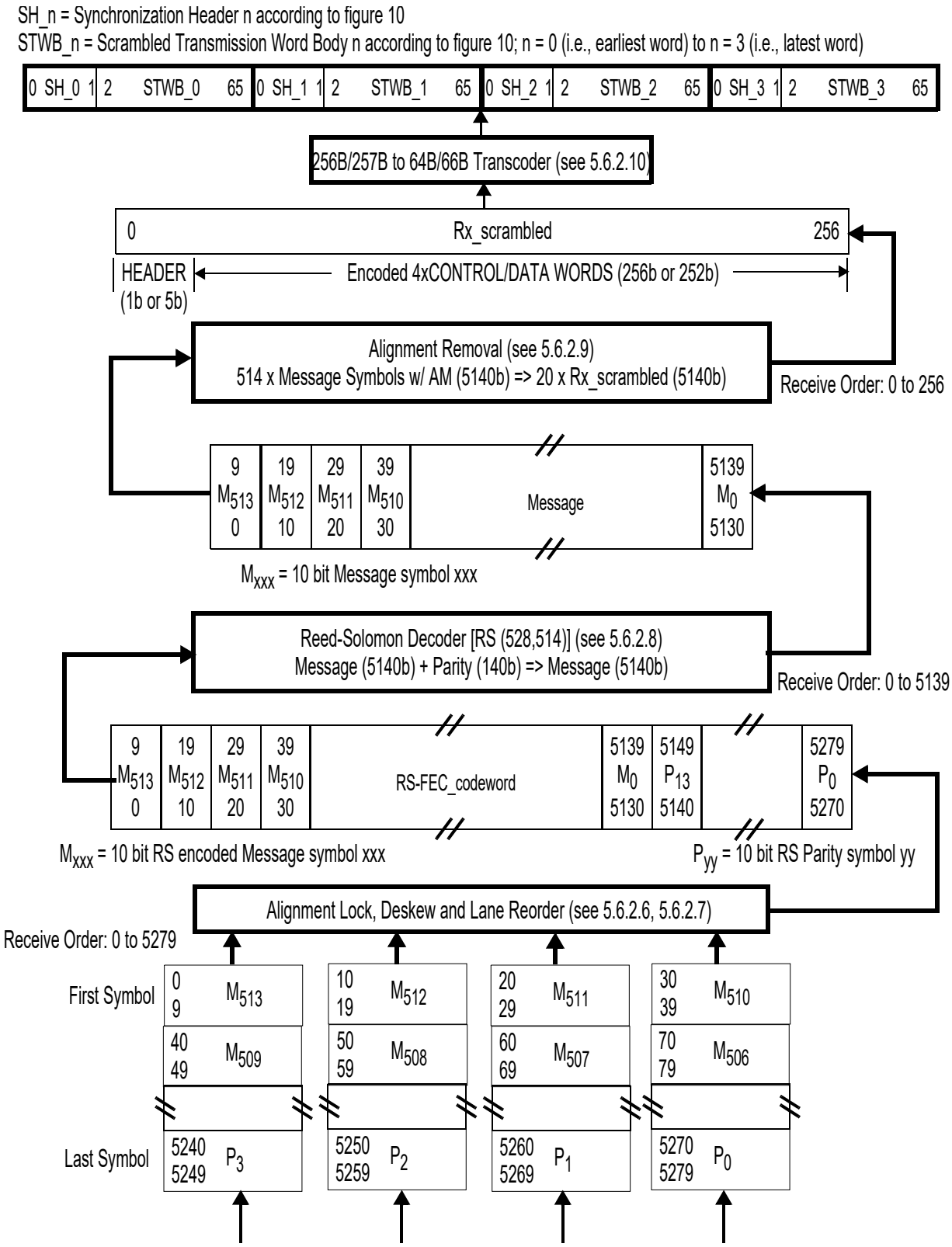

Figure 40 - Receive bit ordering

5.9 FEC for 256GFC

5.9.1 Overview

This clause specifies how Forward Error Correction (FEC) is implemented on 256GFC ports. FEC usage is mandatory on 256GFC ports. Streams of 64/66B Transmission Words in both directions on a 256GFC link are encoded by the FEC layer as specified below.

5.9.2 Functional block diagram

5.9.2.1 Overview

A functional block diagram of the 256GFC RS-FEC sub layer is shown in figure 41.

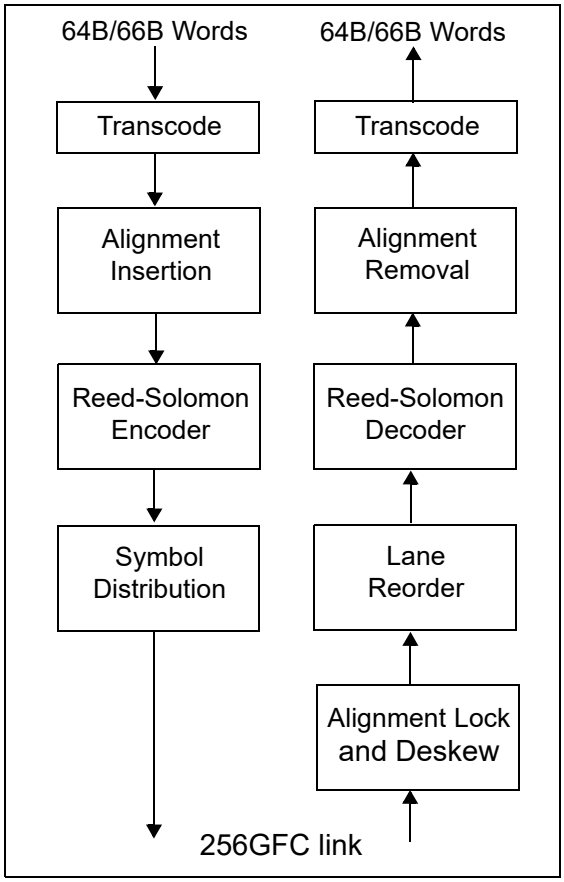

Figure 41 - 256GFC RS-FEC sub layer functional block diagram

5.9.2.2 64B/66B to 256B/257B Transcoder

64B/66B to 256B/257B transcoding is done as specified in 5.8.2.1.

5.9.2.3 Alignment marker mapping and insertion

The alignment insertion function inserts a unique data pattern (i.e., Alignment Marker) for each link into the data stream to enable identification of which of the four links is which FEC lane. This function enables the receiver to map the physical links to logical lanes allowing for random connections of the Transmit links to the Receive links within the group of 4 links, in addition to providing a framing pattern for aligning the FEC code words.

The first 514b of every 4096th FEC code word carries Alignment Marker information.

The alignment marker bit sequence is identical to the first two re-mapped AM blocks specified in Clause 82.2.7 and Clause 91.5.2.6 when replacing the BIP3 field for Lane 1, Lane 2, and Lane 3 of the AM0 blocks with the value 0xCA, the BIP3 for AM4 with 0x9D, the BIP3 for AM5 with 0xD7, the BIP3 for AM6 with 0x6F, and the BIP3 for AM7 with 0xA1. For Lane0, the BIP3 field of AM0 carries Link degrade information associated with the link degrade function (see 5.5.10.2). Additionally the first bit of AM8 and AM9 that are part of the sequence is changed from 0->1 to maintain DC balance.

Table 22 shows the data stream that will appear on each of the 4 lanes after the RS symbol distribution of the AM pattern is done. The ‘d’ is the first 6b of data from block that follows the AM pattern. The underlined values are the replaced BIP3 and BIP7 fields in the AM blocks.

Table 22 - 256GFC FEC Alignment Marker

AM bits	Lane3	Lane2	Lane1	Lane0
[39:0]	0011000001	0011000001	0011000001	0011000001
[79:40]	0001011010	0001011010	0001011010	0001011010
[119:80]	0010100010	0010100010	0010100010	10000, RD,0010
[159:120]	0011111011	0011111011	0011111011	0011111010
[199:160]	1010010111	1010010111	1010010111	1010010111
[239:200]	0101110111	0101110111	0101110111	111, ~RD,110111
[279:240]	1110110011	0110100011	0111010011	1101010101
[319:280]	0100010101	0100101010	0001010011	0000011111
[359:320]	0101100110	1100100110	1111000010	0100001001
[399:360]	0100101000	0101011011	0010110101	1010100111
[439:400]	1110101000	1101010110	1010110010	1110000000
[479:440]	1001100110	1101100110	0011110111	1111011011
[513:480]	dddddd1110	0110010000	0100101000	0101100010

5.9.2.4 Reed-Solomon encoder

Reed-Solomon encoding is done as specified in 5.5.4.

5.9.2.5 Symbol distribution

Once the data has been encoded, it is distributed to 4 lanes, in groups of 10 bit symbols.

Symbol distribution is done as specified in IEEE 802.3-2015 91.5.2.8.

5.9.2.6 Gray mapping

Gray mapping is done as specified in 5.5.5.

5.9.2.7 Precoding

Precoding is done independently for each of the 4 lanes as specified in 5.5.6.

5.9.2.8 Transmit bit ordering

Transmit bit ordering is as shown in figure 42.

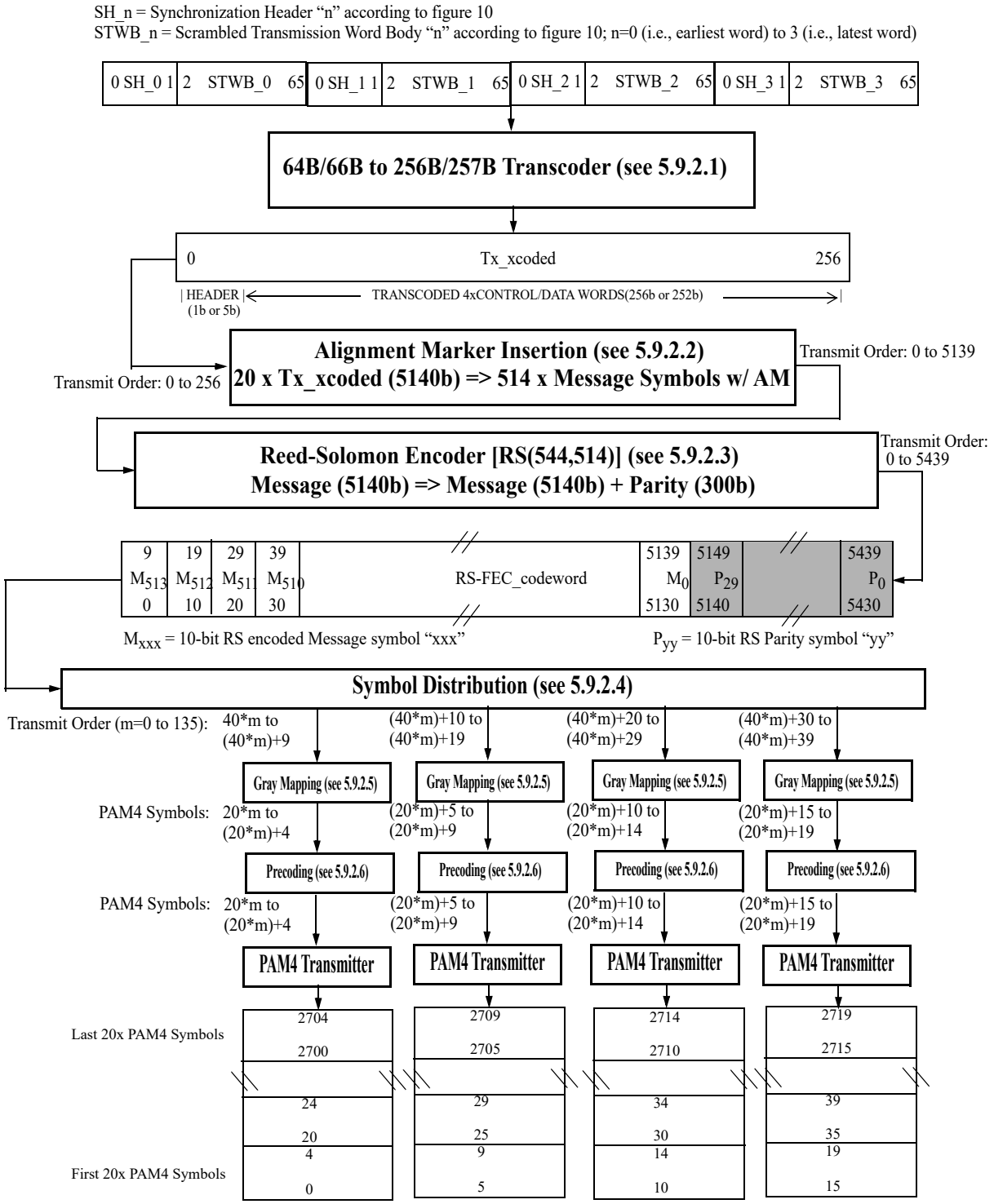

Figure 42 - 256GFC 256B/257B transmit bit ordering

5.9.2.9 Inverse precoding

Inverse precoding is done independently for each of the 4 lanes as specified in 5.5.7.

5.9.2.10 Inverse Gray mapping

Inverse Gray mapping is done as specified in 5.5.8.

5.9.2.11 Alignment lock and deskew

The receive function creates 4 bit streams after concatenating the bits received on each lane. It then obtains LOCK to the alignment markers on each lane as specified by the FEC synchronization state diagram in IEEE 802.3-2015 91.5.3.1.

After alignment marker lock is achieved on all four lanes, all inter lane skew is removed as specified by the FEC alignment state diagram in IEEE 802.3-2015 91.5.3.1. The FEC receive function will support a maximum skew of 180ns between lanes and a maximum skew variation of 4ns.

5.9.2.12 Lane reorder

FEC lanes may be received on different lanes of the service interface from which they were originally transmitted.

The FEC receive function shall order the FEC lanes according to the FEC lane number per IEEE 802.3-2015 91.5.3.2.The FEC lane number is defined by the alignment marker that is mapped to each FEC lane.

After all FEC lanes are aligned, deskewed, and reordered, the FEC lanes are multiplexed together in the proper order to reconstruct the original stream of FEC code words.

5.9.2.13 Reed-Solomon decoder

Decoding is done as specified in 5.5.10.1. In addition, link degrade signaling is done as specified in 5.5.10.2.

5.9.2.14 Alignment marker removal

The first 514 bits in every 4096 code words are the mapped alignment marker bits. These are removed before sending the data to the transcode block.

5.9.2.15 256B/257B to 64B/66B transcoder

The first five bits of the of the received block rx_scrambled<256:0>, in reception order, are descrambled so that rx_scrambled<256:0> generates rx_coded<256:0> as follows:

a) Set rx_coded<4:0> to the result of the bit wise Exclusive-OR of rx_scrambled<4:0> and rx_scrambled<12:8>; and
b) Set rx_coded<256:5> to rx_scrambled<256:5>.

Next, a group of four 66 bit transmission words are constructed from each received 257 bit transmission word as specified in 5.4.7.

5.9.2.16 Receive bit ordering

Receive bit ordering is as specified in figure 43.

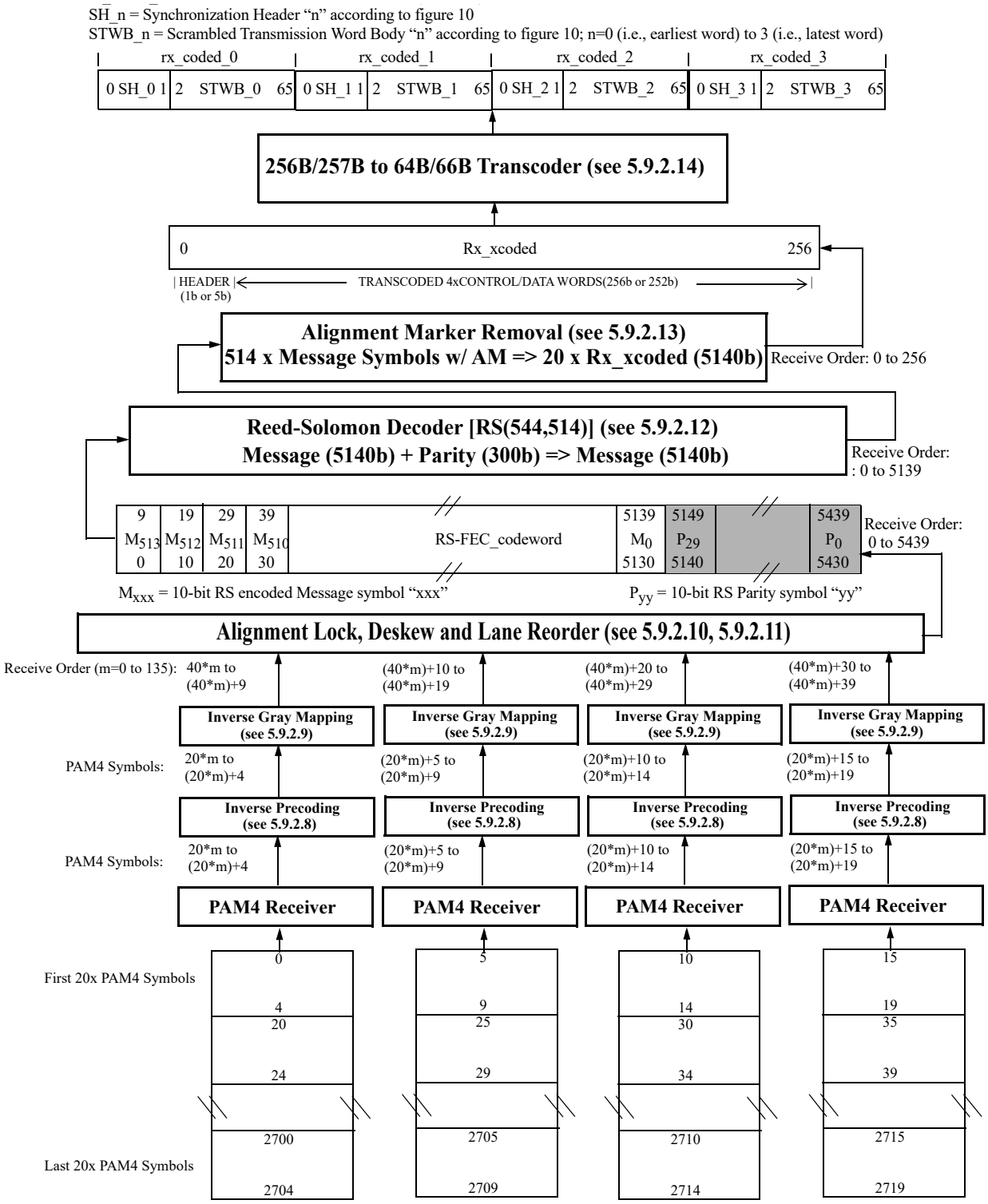

Figure 43 - 256GFC **256B/257B receive bit ordering**

5.10 Single lane 128GFC 256B/257B transmission code

5.10.1 Overview

An FC-0 standard (e.g., FC-PI-8) may specify the use of the single-lane 128GFC 256B/257B transmission code as its frame transfer transmission code. If the single lane 128GFC 256B/257B transmission code is specified, then it shall be:

a) generated as described in 5.5.2 and 5.5.3;
b) encoded with either Single Reed-Solomon coding as described in 5.10.4 or, when enabled, encoded using Interleaved Reed-Solomon coding as described in 5.10.3;
c) Bit Interleaved as described in 5.10.6 or, when enabled, Symbol Forwarded as described in 5.10.5;
d) Gray mapped as described in 5.5.5;
e) Precoded, when enabled, as described in 5.5.6;
f) inverse Precoded, when enabled, as described in 5.5.7;
g) inverse Gray mapped as described in 5.5.8;
h) Bit De-Interleaved as described in 5.10.9, or when enabled, Symbol De-Interleaved as described in 5.10.8;
i) decoded with either Single Reed-Solomon decoder as described in 5.10.11 or, when enabled, decoded using Interleaved Reed-Solomon decoding as described in 5.10.10; and
j) recovered as described in 5.5.11 and 5.5.12.

5.10.2 Alignment marker mapping and insertion

5.10.2.1 Overview

The alignment insertion function inserts a unique data pattern (i.e., Alignment Marker) into the data stream to provide a framing pattern for aligning the FEC code words.

The first 257b of every 1024th 5440b FEC code word carries Alignment Marker information. For single lane 128GFC, the interval between Alignment Markers is the same when either Single Reed-Solomon or Interleaved Reed-Solomon is used.

5.10.2.2 Single Reed-Solomon Symbol Forwarding or Interleaved Reed-Solomon Symbol Forwarding

The first 256 bits (i.e., 0 to 255) of the Alignment Marker (i.e., AM) vector are composed of AM0, AM4, AM8 and AM12 from Table 82-2 of IEEE 802.3-2015. AMx is the marker for PCS lane number x in Table 82-2. AM0 is the first marker transmitted on the line, followed by AM4, AM8 and AM12. Each octet in the AM vector is transmitted LSB, rightmost bit, to MSB, leftmost bit, starting from the leftmost octet to the rightmost octet. The last bit (i.e., 256) is a pad bit that is always transmitted as zero.

The BIP3 octet of AM0 carries Link degrade information associated with the link degrade function (see 5.5.10.2). The bits of this octet are assigned as follows:

a) BIP3[0]=RD (see 5.5.10.2);
b) BIP3[3:1]=0, Reserved for future use; and
c) BIP3[7:4]=0xA.

The Alignment Marker vector inserted during Alignment Marker Insertion (i.e., AM) is as shown in table 23.

Table 23 - Single Reed-Solomon Symbol Forwarding or Interleaved Reed-Solomon Symbol Forwarding Alignment Marker (AM)

hex [0:23]	binary [24:27]	hex [28:55]	binary [56:59]	hex [60:255]	binary [256]
831684	RD [a]000	57ce97b	~RD [a]1111	aafe09055501f6faa05246e55-fadb91aa3a9d4d55c562b2aa	0
[a] See RD defined in 5.5.10.2.					

The Remote Degrade indicator is in bit 24 of the AM[256:0] vector and the bit inverse of the Remote Degrade indicator is in bit 56. The BIP7 octet is the bit-wise inverse of BIP3 but conveys no useful information. As an example, the first 32 bits of the AM vector are ordered as follows with the left-most bit sent first:

a) 1000_0011_0001_0110_1000_0100_RD000_0101.

For all other markers besides AM0, BIP3=0xAA and BIP7=0x55.

5.10.2.3 Single Reed-Solomon Bit Interleaving

The inserted Alignment Marker (i.e., Inserted_AM) vector used during Single Reed-Solomon Bit Interleaving is derived from the Alignment Marker specified in 5.10.2.1. It is formatted such that, after Single Reed-Solomon Bit Interleaving in 5.10.5.2, the Alignment Marker at tx_out is similar to the Alignment Marker specified in 5.10.2.1.

```
for k = 0 to 11
   for all j=0 to 9
   inserted_AM<20*k+j> = AM<20*k+2j>
   inserted_AM<20*k+j+10> = AM<20*k+2j+1>
k=12
  for all j=0 to 9
     if (j==9)
        inserted_AM<20k+j>    = AM<256>
     else if (j==8)
        inserted_AM<20k+j>    = AM<255>
     else if (j==7)
        inserted_AM<20k+j>    = AM<20k+2j>
     else
        inserted_AM<20k+j>    = AM<20k+2j>
        inserted_AM<20k+j+10> = AM<20k+2j+1>
```

The Alignment Marker vector inserted during Alignment Marker Insertion (i.e., inserted_AM) is as shown in table 24.

Table 24 - Single Reed-Solomon Bit Interleaving Alignment Marker (Inserted_AM)

hex [0:19]	binary [20:23]	hex [24:47]	binary [48:51]	hex [52:255]	binary [256]
91858	00RD [a]10	1a3ee7	~RD [a]110	77ff0388013f0dc7bf040c1c2af-fbb353dd04a21ef217b8df10	0

[a] See RD defined in 5.5.10.2.

The Remote Degrade indicator is in bit 22 of the Inserted_AM[256:0] vector and the bit inverse of the Remote Degrade indicator is in bit 48. As an example, the first 32 bits of the Inserted_AM vector are ordered as follows with the left-most bit sent first:

a) 1001_0001_1000_0101_1000_00RD0_0001_1010.

5.10.2.4 Interleaved Reed-Solomon Bit Interleaving

The inserted Alignment Marker (i.e., Inserted_AM) vector used during Interleaved Reed-Solomon Bit Interleaving is derived from the Alignment Marker specified in 5.10.2.1. It is formatted such that, after Interleaved Reed-Solomon Bit Interleaving in 5.10.5.1, the Alignment Marker at tx_out is similar to the Alignment Marker specified in 5.10.2.1.

```
for k = 0 to 11
   for all j=0 to 9
      if even(k)
      inserted_am<20*k+j> = AM<20*k+2j>
      inserted_am<20*k+j+10> = AM<20*k+2*j+1>
      else
      inserted_am<20*k+j+10> = AM<20*k+2*j>
      inserted_am<20*k+j> = AM<20*k+2j+1>
k=12
  for all j=0 to 9
     if (j==9)
        inserted_AM<20k+j>    = AM<256>
     else if (j==8)
        inserted_AM<20k+j>    = AM<255>
     else if (j==7)
        inserted_AM<20k+j>    = AM<20k+2j>
     else
        inserted_AM<20k+j>    = AM<20k+2j>
        inserted_AM<20k+j+10> = AM<20k+2j+1>
```

The Alignment Marker vector inserted during Alignment Marker Insertion (i.e., inserted_AM) is as shown in table 25.

Table 25 - Interleaved Reed-Solomon Bit Interleaving Alignment Marker (Inserted_AM)

hex [0:31]	binary [32:35]	hex [36:47]	binary [48:51]	hex [52:255]	binary [256]
918588f8	RD [a]000	6e7	~RD [a]110	770e3fc8013f1ec37f040-cabc70fbb35410f7a21efee085df10	0
[a] See RD defined in 5.5.10.2.					

The Remote Degrade indicator is in bit 32 of the AM[256:0] vector and the bit inverse of the Remote Degrade indicator is in bit 48. As an example, the first 36 bits of the AM vector are ordered as follows with the left-most bit sent first:

a) 1001_0001_1000_0101_1000_1000_1111_1000_RD000.

5.10.3 Interleaved Reed-Solomon encoder

When Interleaved Reed-Solomon encoding is selected, a Pre-FEC distribution function shall be implemented as defined in IEEE 8023ck D2.2 161.5.2.7 to form two 514-symbol FEC messages that are each subsequently encoded by two RS FEC as defined in IEEE 8023ck D2.2 161.5.2.8.

The Pre-FEC distribution function:

1) receives a 10 280-bit block containing forty 257-bit Transmission Words that may or may not include an Alignment Marker; and
2) shall perform a 10-bit symbol round robin distribution to form two 514-symbol FEC messages, M_A and M_B.

The two 514-symbol FEC messages are each subsequently encoded by the RS FEC to produce two 5 440-bit RS FEC codewords, C_A<0:5439> and C_B<0:5439>.

5.10.4 Single Reed-Solomon encoder

When Single Reed-Solomon encoding is selected, Reed-Solomon encoding is done as specified in 5.5.4.

5.10.5 Symbol Forwarding

5.10.5.1 Interleaved Reed-Solomon Symbol Forwarding

If Symbol Forwarding and Interleaved Reed-Solomon encoding is selected, the two 5 440-bit RS FEC codewords (C_A<0:5439> and C_B<0:5439>) containing both message symbols and parity symbols are interleaved at 10-bit symbol boundaries to reconstruct the original stream of forty 257-bit Transmission Words with the addition of parity symbols to produce a stream of 1 088 symbols (i.e., 2*514+2*2t where t = 15). The symbol forwarding of two codewords shall follow this procedure:

```
for all k=0 to 271
   for all j=0 to 1
      tx_out<40k+20j:40k+20j+9> = C_A<20k+10j:20k+10j+9>
      tx_out<40k+20j+10:40k+20j+19> = C_B<20k+10j:20k+10j+9>
```

5.10.5.2 Single Reed-Solomon Symbol Forwarding

If Symbol Forwarding and Single Reed-Solomon encoding is selected, once the data has been FEC encoded, the FEC codeword, (C<0:5439>) is symbol forwarded. Symbol forwarding of the codeword shall follow this procedure:

```
tx_out<0:5439> = C<0:5439>
```

5.10.6 Bit Interleaving

5.10.6.1 Interleaved Reed-Solomon Bit Interleaving

If Bit Interleaving and Interleaved Reed-Solomon encoding is selected, the two 5 440-bit RS FEC codewords (C_A<0:5439> and C_B<0:5439>) containing both message symbols and parity symbols are interleaved at 10-bit symbol boundaries then bit interleaved to produce a stream of 1 088 symbols (i.e., 2*514+2*2t where t = 15). The symbol forwarding and bit interleaving of two codewords shall follow this procedure:

```
for all k=0 to 543
   for all j=0 to 9
      if even(k)
         tx_out<20k+2j> = CA<10k+j>
         tx_out<20k+2j+1> = CB<10k+j>
      else
         tx_out<20k+2j> = CB<10k+j>

         tx_out<20k+2j+1> = CA<10k+j>
```

5.10.6.2 Single Reed-Solomon Bit Interleaving

If Bit Interleaving and Single Reed-Solomon encoding is selected, once the data has been FEC encoded, the FEC codeword, (C<0:5439>) is bit interleaved. Bit interleaving of the codeword shall follow this procedure:

```
for all k=0 to 271
   for all j=0 to 9
      tx_out<20k+2j> = C<20k+j>
      tx_out<20k+2j+1> = C<20k+j+10>
```

5.10.7 Alignment lock

When Interleaved Reed-Solomon encoding is selected, the receive function obtains LOCK to the alignment markers as specified by the FEC alignment state diagram in IEEE 8023ck D2.2 figure 161-6, using the variable and counter definitions from IEEE 8023ck D2.2 161.5.4.2 but modified for single lane Fibre Channel operation.

When Single Reed-Solomon encoding is selected, the receive function obtains LOCK to the alignment markers as specified in 5.5.9.

5.10.8 Symbol De-Interleaving

5.10.8.1 Interleaved Reed-Solomon Symbol De-interleaving

After alignment marker lock is achieved, when Symbol Forwarding and Interleaved Reed-Solomon encoding is selected, the received 1 088 symbol stream is symbol de-interleaved to reconstruct the original stream of two 5 440-bit RS FEC codewords (C_A<0:5439> and C_B<0:5439>).

Symbol de-interleaving of the 1 088 symbol codeword shall follow this procedure:

```
for all k=0 to 271
   for all j=0 to 1
      CA<20k+10j:20k+10j+9> = rx_in<40k+20j:40k+20j+9>
      CB<20k+10j:20k+10j+9> = rx_in<40k+20j+10:40k+20j+19>
```

5.10.8.2 Single Reed-Solomon Symbol De-interleaving

After alignment marker lock is achieved, when Symbol Forwarding and Single Reed-Solomon encoding is selected, the received 544 symbol codeword is symbol de-interleaved to reconstruct the original 5 440-bit RS FEC codeword, C<0:5439>.

Symbol de-interleaving of the 544 symbol codeword shall follow this procedure:

```
C<0:5439> = rx_in<0:5439>
```

5.10.9 Bit De-Interleaving

5.10.9.1 Interleaved Reed-Solomon Bit De-interleaving

After alignment marker lock is achieved, when Bit Interleaving and Interleaved Reed-Solomon encoding is selected, the received 1 088 symbol stream is bit de-interleaved to reconstruct the original stream of two 5 440-bit RS FEC codewords (C_A<0:5439> and C_B<0:5439>).

Bit de-interleaving of the 1 088 symbol codeword shall follow this procedure:

```
for all k=0 to 543
   for all j=0 to 9
      if even(k)
         CA<10k+j> = rx_in<20k+2j>
         CB<10k+j> = rx_in<20k+2j+1>
      else
         CB<10k+j> = rx_in<20k+2j>
         CA<10k+j> = rx_in<20k+2j+1>
```

5.10.9.2 Single Reed-Solomon Bit De-interleaving

After alignment marker lock is achieved, when Bit Interleaving and Single Reed-Solomon encoding is selected, the received 544 symbol stream is bit de-interleaved to reconstruct the original 5 440-bit RS FEC codeword, C<0:5439>.

Bit de-interleaving of the 544 symbol codeword shall follow this procedure:

```
for all k=0 to 271
   for all j=0 to 9
      C<20k+j> = rx_in<20k+2j>
      C<20k+j+10> = rx_in<20k+2j+1>
```

5.10.10 Interleaved Reed-Solomon decoder

After the original stream of two 5 440-bit RS FEC codewords, C_A and C_B, are reconstructed, they are each subsequently decoded by the RS FEC as defined in IEEE 8023ck D2.2 161.5.3.3 including IEEE 8023ck D2.2 161.5.3.3.1.

The FEC_corrected_cw_counter counts once for each corrected 544-symbol FEC codeword processed. If both 544-symbol codewords of the interleaved 1 088-symbol codeword contain errors that are corrected, these are counted as two corrected codewords.

The FEC_uncorrected_cw_counter counts once for each uncorrected 544-symbol FEC codeword processed. If both 544-symbol codewords of the interleaved 1 088-symbol codeword contain errors that are not corrected, these are counted as two uncorrected codewords.

After decoding each Reed-Solomon codeword, the message symbols, M_A and M_B, are then de-interleaved to reconstruct the original stream of message symbols as defined in IEEE 8023ck D2.2 161.5.3.4

5.10.10.1 Link Degrade Signaling

Link Degrade Signaling is done as specified in 5.5.10.2.

5.10.11 Single Reed-Solomon decoder

5.10.11.1 Overview

When Single Reed-Solomon encoding is selected, Reed-Solomon decoding is done as specified in 5.5.10.1.

5.10.11.2 Link Degrade Signaling

Link Degrade Signaling is done as specified in 5.5.10.2.

5.10.12 Interleaved Reed-Solomon Transmit Bit Ordering

The transmit bit ordering for single lane 128GFC 256B/257B using Interleaved RS FEC is shown in figure 44.

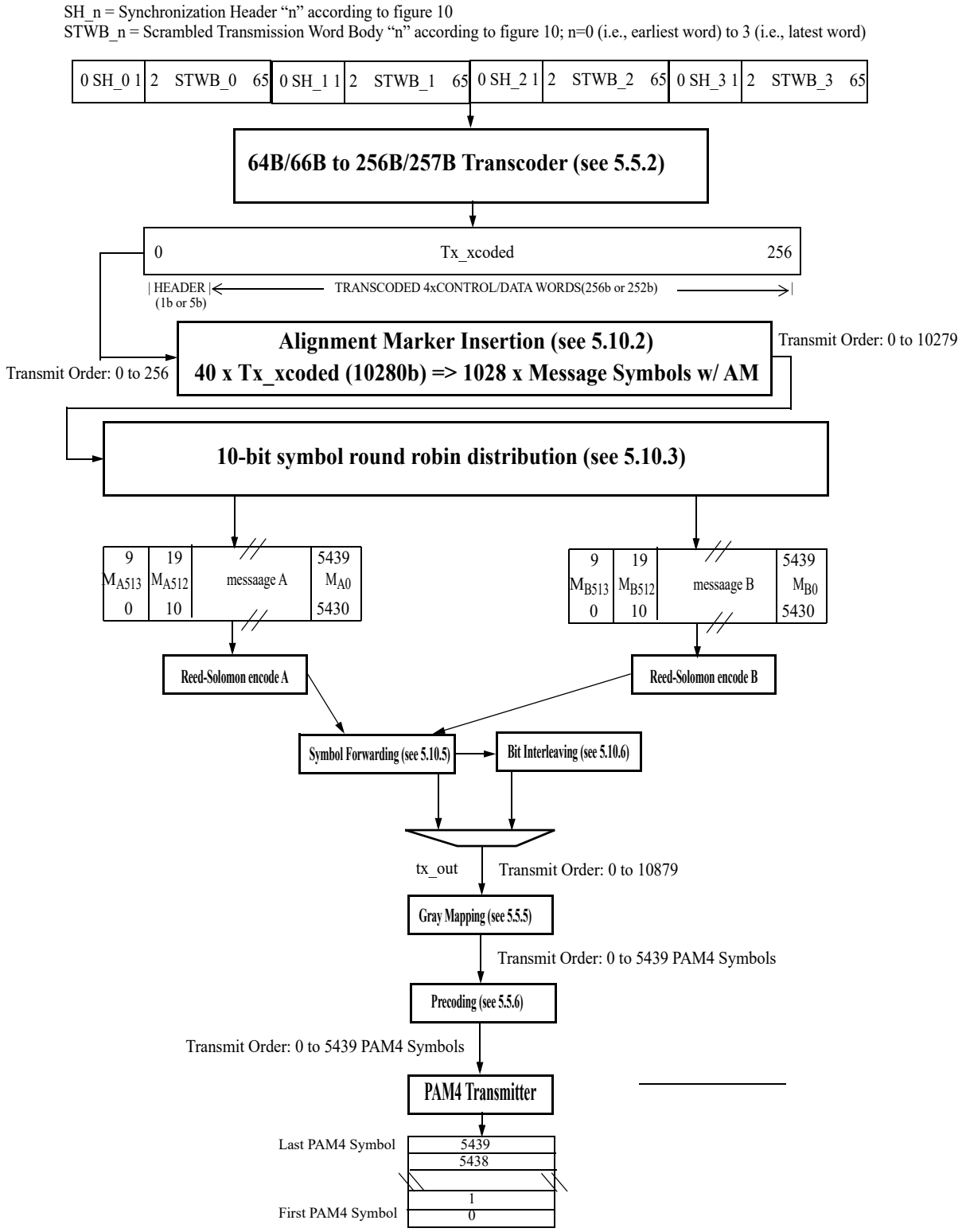

Figure 44 - 128GFC 256B/257B Interleaved Reed-Solomon transmit bit ordering

5.10.13 Interleaved Reed-Solomon Receive Bit Ordering

Receive bit ordering for single lane 128GFC 256B/257B using Interleaved RS FEC is shown in figure 45.

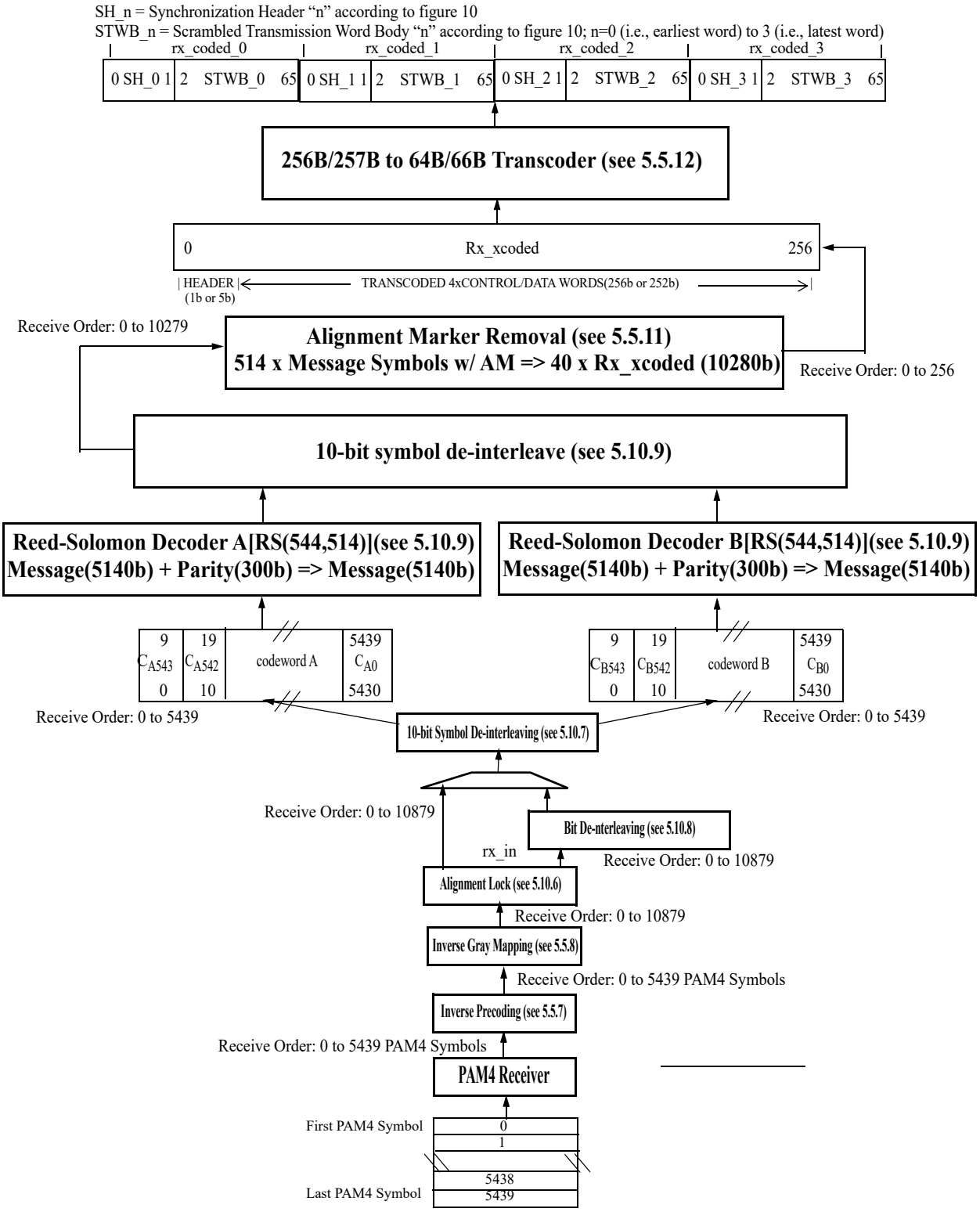

Figure 45 - 128GFC 256B/257B Interleaved Reed-Solomon receive bit ordering

5.10.14 Single Reed-Solomon Transmit Bit Ordering

The transmit bit ordering for single lane 128GFC 256B/257B using Single RS FEC is shown in figure 46.

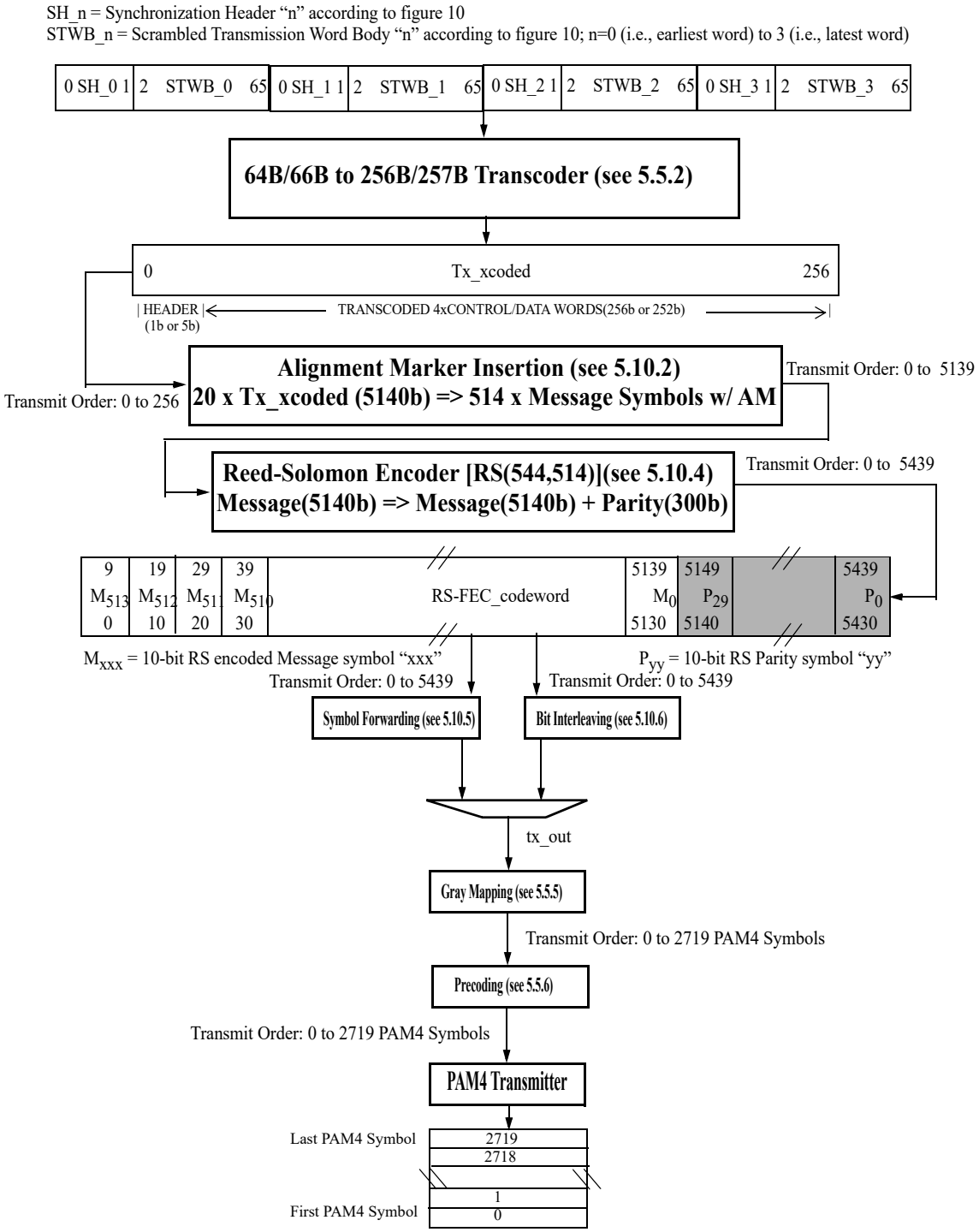

Figure 46 - 128GFC 256B/257B Single Reed-Solomon transmit bit ordering

5.10.15 Single Reed-Solomon Receive Bit Ordering

Receive bit ordering for single lane 128GFC 256B/257B using Single RS FEC is shown in figure 47.

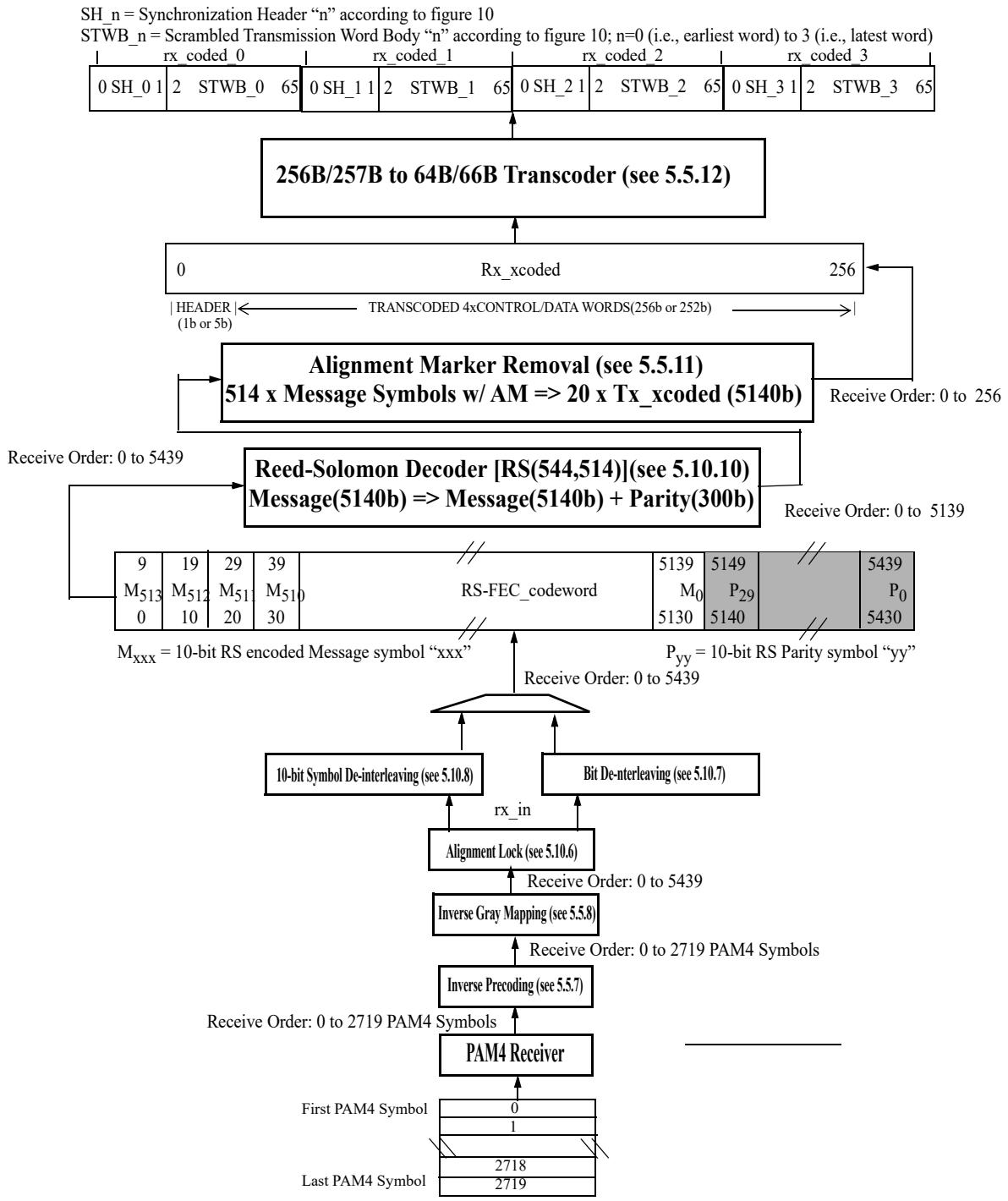

Figure 47 - 128GFC 256B/257B Single Reed-Solomon receive bit ordering

6 FC-1 Transmission Word Synchronization

6.1 Scope

Transmission Word Synchronization is a function of the FC-1 level.

6.2 Introduction

In the Fibre Channel architecture, the FC-0 level is responsible for bit transmission and reception (see FC-PI-x). The FC-1 level is responsible for providing a stream of bits for the FC-0 level to transmit. No state information is needed to accomplish this other than that necessary for 64B/66B scrambling and 8B/10B running disparity. The FC-1 level is also responsible for deriving Transmission Word Synchronization and Transmission Words from the received bit stream.

Whenever a signal (see FC-PI-x) is detected on a fibre, the receiver attached to that fibre shall attempt to achieve synchronization on both bit and Transmission Word boundaries of the received encoded bit stream. Bit Synchronization is defined in FC-PI-x. Transmission Word Synchronization is defined in this clause. Synchronization failures on either bit or Transmission Word boundaries are not separately identifiable; both cause Loss-of-Synchronization errors.

An FC_Port receiver has two mutually exclusive receiver Transmission Word Synchronization states, Word Synchronization Acquired and Loss of Synchronization. In the Word Synchronization Acquired state, the FC-1 level shall decode the received signal and pass information to the FC-2P level. In the Loss of Synchronization state, the FC-1 level shall not pass information to the FC-2P level.

A receiver may provide an indication of a Loss-of-Signal condition (see FC-PI-x).

6.3 8B/10B Transmission Word Synchronization

6.3.1 State Diagram Overview

The Receiver State Diagram for 8B/10B Transmission Word Synchronization is shown in figure 48.

The Receiver states are as follows:

a) Loss of Synchronization state;
b) No Invalid Transmission Word Detected state;
c) First Invalid Transmission Word Detected state;
d) Second Invalid Transmission Word Detected state;
e) Third Invalid Transmission Word Detected state; and
f) Reset state.

Being in one of the Word Synchronization Acquired states refers to being in any of:

a) No Invalid Transmission Word Detected state;
b) First Invalid Transmission Word Detected state;
c) Second Invalid Transmission Word Detected state; or
d) Third Invalid Transmission Word Detected state.

The receiver state transitions are defined as follows:

a) Transition 1: Power-on;
b) Transition 2: Acquisition of Word Synchronization (see 6.3.3.2.2);
c) Transition 3: An invalid Transmission Word is detected (see 6.3.4.2);
d) Transition 4: A detection of a Loss-of-Signal condition (see 6.2);
e) Transition 5: Two consecutive Transmission Words that are not Invalid Transmission Words are detected (see 6.3.4.2);
f) Transition 6: Reset condition imposed on the receiver (see 6.3.5.4); and
g) Transition 7: Exiting of receiver reset condition (see 6.3.5.4).

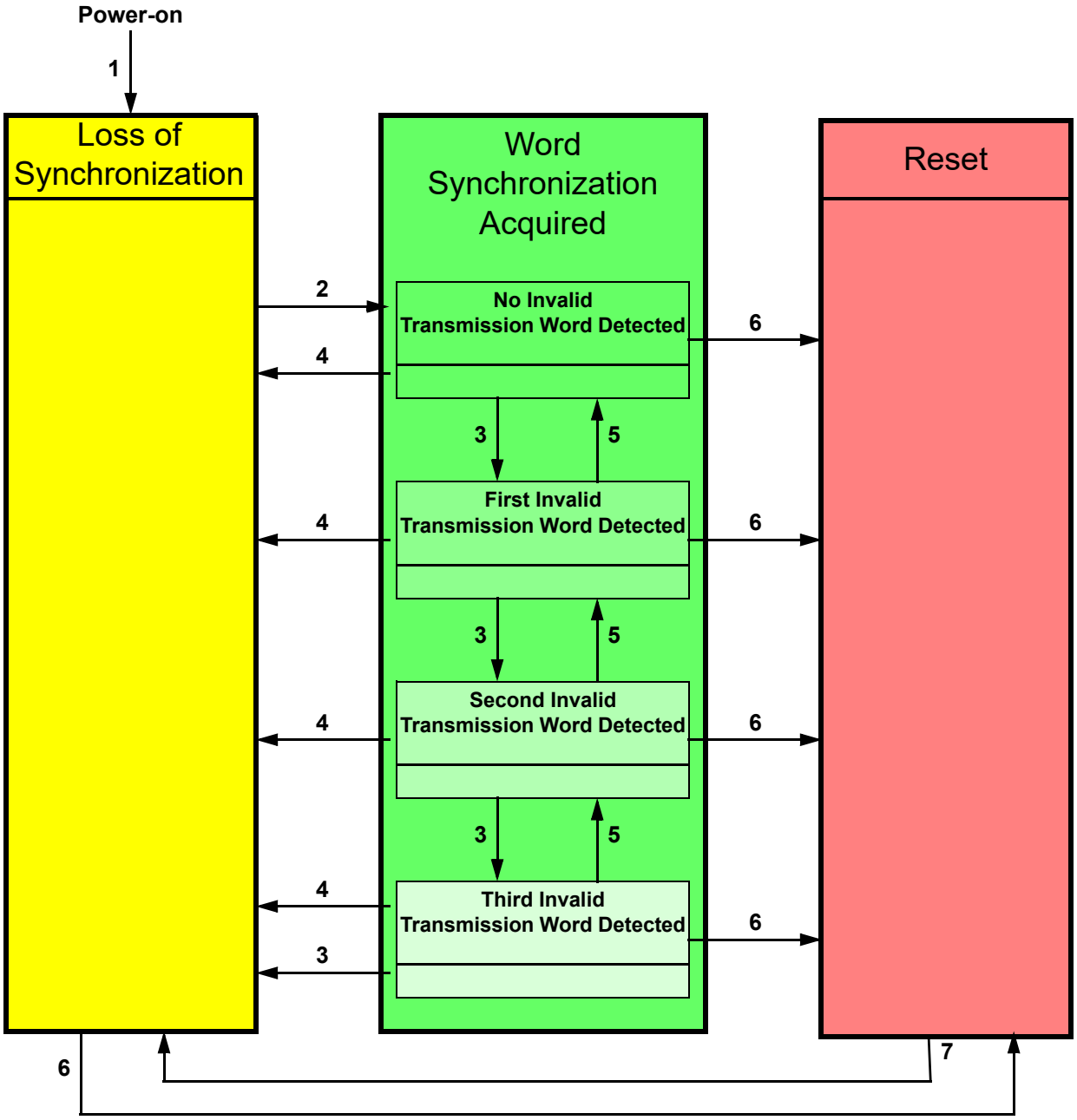

Figure 48 - Receiver state diagram

6.3.2 Operational and not operational conditions

When the receiver is operational, it shall be in either the Loss of Synchronization state or in one of the Word Synchronization Acquired states.

When the receiver is Not operational, it shall be in the Reset state.

6.3.3 Transmission Word Synchronization Procedure

The Transmission Word Synchronization procedure consists of first achieving Bit Synchronization (see 6.3.3.1), followed by achieving Transmission Word Synchronization (see 6.3.3.2).

6.3.3.1 Bit Synchronization

An operational receiver that is in the Loss of Synchronization state shall first acquire Bit Synchronization before attempting to acquire Transmission Word Synchronization. Bit Synchronization is defined in FC-PI-x. After achieving Bit Synchronization, the receiver shall remain in the Loss of Synchronization state until it achieves Transmission Word Synchronization.

6.3.3.2 Transmission Word Synchronization detection

6.3.3.2.1 Introduction

The comma contained within the K28.5 special character is a singular bit pattern that in the absence of transmission errors shall not appear in any other location of a Transmission Character and shall not be generated across the boundaries of any two adjacent Transmission Characters. This bit pattern is sufficient to identify the Transmission Word alignment of the received bit stream. Some implementations (e.g., those that choose to implement the Transmission Word alignment function in Continuous-mode alignment) may choose to align on the full K28.5 Ordered Set to decrease the likelihood of false alignment when bit errors are present in the received bit stream.

Placement of a K28.5 Transmission Character at the left-most position of a received Transmission Word ensures proper alignment of that Transmission Word and of subsequently received Transmission Words. Ordered Set detection shall include both detection of the individual Transmission Characters that make up an Ordered Set and proper alignment of those characters (i.e., the Special Character used to designate an Ordered Set shall be aligned in the leading (left-most) character position of the received Transmission Word).

6.3.3.2.2 Achieving Transmission Word Synchronization

A receiver that is in the Loss of Synchronization state and has acquired Bit Synchronization shall attempt to acquire Transmission Word Synchronization. Transmission Word Synchronization is acquired by the detection of three Ordered Sets containing commas in their left-most bit positions without an intervening invalid Transmission Word, as specified in 6.3.4.2. The third detected Ordered Set shall change the state from the Loss of Synchronization state to the No Invalid Transmission Word Detected state using transition 2. The third detected Ordered Set shall be considered valid information and shall be decoded and provided by the receiver to its FC_Port. A receiver in any of the Word Synchronization Acquired states shall provide information that has been received from its attached fibre and decoded.

The method used by the receiver to implement the Transmission Word alignment function and to detect Ordered Sets is not defined by this standard.

6.3.3.2.3 8B/10B Transmission Word Synchronization for speed negotiation

If the link speed negotiation algorithm (see 8.6) is performed using 8B/10B, then the pass sync_test count shall be 1 000.

6.3.3.2.4 Transmission Word alignment methods

6.3.3.2.4.1 Continuous-mode alignment

Continuous-mode alignment allows the receiver to reestablish Transmission Word alignment at any point in the incoming bit stream while the receiver is operational. Such realignment is likely (but not guaranteed) to result in code violations and subsequent Loss-of-Synchronization. Under certain conditions, it may be possible to realign an incoming bit stream without Loss-of-Synchronization. If such a realignment occurs within a received frame, detection of the resulting error condition is dependent upon higher-level function (e.g., invalid CRC, missing EOF Delimiter).

6.3.3.2.4.2 Explicit-mode alignment

Explicit-mode alignment allows the receiver to reestablish Transmission Word alignment under controlled circumstances (e.g., while in the Loss of Synchronization State). Once synchronization has been acquired, the Transmission Word alignment function of the receiver is disabled.

6.3.4 Loss of Transmission Word Synchronization

6.3.4.1 Introduction

Loss of Transmission Word Synchronization shall occur in the following conditions:

a) a Loss-of-Signal is detected when in any of the Word Synchronization Acquired states; or
b) an invalid Transmission Word is detected in the Third Invalid Transmission Word Detected state.

6.3.4.2 Detection of an invalid Transmission Word

In each of the Word Synchronization Acquired states each received Transmission Word is tested to determine the validity of the Transmission Word.

An invalid Transmission Word shall be recognized by the receiver when one of the following conditions is detected:

a) a code violation, as specified by the 8B/10B transmission code (see 5.2), is detected within a Transmission Word. This is referred to as a code violation condition;
b) a K30.7 special character is detected in any character position of a Transmission Word. This indicates an error condition has been detected at a lower implementation level within the receiver;
c) any valid special character is detected in the second, third, or fourth character position of a Transmission Word. This is referred to as an invalid special code alignment condition; or
d) a defined Ordered Set (see clause 5) is received with improper beginning running disparity (e.g., a SOF delimiter is received with positive beginning running disparity, an EOF delimiter specified for positive beginning running disparity is received when beginning running disparity for that Transmission Word is negative). This is referred to as an invalid beginning running disparity condition.

6.3.5 State transitions

6.3.5.1 Default State

A receiver shall enter the Loss of Synchronization state on power-on (i.e., default).

6.3.5.2 Loss of Synchronization state

The Loss of Synchronization State shall be entered upon the following conditions:

a) completion of the Loss-of-Synchronization procedure while in the Third Invalid Transmission Word Detected state using transition 3;
b) detection of Loss-of-Signal while in the No Invalid Transmission Word Detected state, the First Invalid Transmission Word Detected state, the Second Invalid Transmission Word Detected state, or the Third Invalid Transmission Word Detected state using transition 4; or
c) completion of the reset while in the Reset state using transition 7.

While in the Loss of Synchronization State, the receiver may attempt to reacquire Bit Synchronization. In some instances, this may allow the receiver to regain Transmission Word Synchronization when it otherwise would not be possible. However, initiation of bit re synchronization may also delay the synchronization process by forcing the receiver to reestablish a clock reference when such reestablishment is otherwise unnecessary (see FC-PI-x for a detailed discussion of Bit Synchronization).

When Transmission Word Synchronization is acquired the receiver shall enter the No Invalid Transmission Word Detected state using transition 2. Imposing a reset condition upon the receiver shall cause any state to transition to the Reset state using transition 6.

6.3.5.3 Word Synchronization Acquired states

6.3.5.3.1 Loss-of-Synchronization procedure

The following four states are defined as Word Synchronization Acquired states:

a) No Invalid Transmission Word Detected state;
b) First Invalid Transmission Word Detected state;
c) Second Invalid Transmission Word Detected state; or
d) Third Invalid Transmission Word Detected state.

NOTE 10 - The rationale for the Loss-of-Synchronization procedure is to reduce the likelihood that a single error results in a Loss-of-Synchronization. A single two-bit error positioned to overlap two Transmission Words could result in the detection of three invalid Transmission Words; the two Transmission Words directly affected by the error and a subsequent Transmission Word that was affected by a disparity change resulting from the error. The procedure described above would maintain synchronization in such a case.

6.3.5.3.2 No Invalid Transmission Word Detected state

When the procedure is in the No Invalid Transmission Word Detected state, checking for an invalid Transmission Word shall be performed. Any invalid Transmission Word shall cause the No Invalid Transmission Word Detected state to transition to the First Invalid Transmission Word Detected state (transition 3). A Loss-of-Signal condition shall cause the No Invalid Transmission Word Detected state to transition to the Loss of Synchronization state (transition 4). A reset condition imposed upon the receiver shall cause the No Invalid Transmission Word Detected state to transition to the Reset state (transition 6).

6.3.5.3.3 First Invalid Transmission Word Detected state

When the procedure is in the First Invalid Transmission Word Detected state, checking for an invalid Transmission Word shall be performed. Any invalid Transmission Word shall cause the First Invalid Transmission Word Detected state to transition to the Second Invalid Transmission Word Detected state (transition 3). If two consecutive Transmission Words that are not Invalid Transmission Words are received, the First Invalid Transmission Word Detected state shall transition to the No Invalid Transmission Word Detected state (transition 5). A Loss-of-Signal condition shall cause the First Invalid Transmission Word Detected state to transition to the Loss of Synchronization state (transition 4). A reset condition imposed upon the receiver shall cause the First Invalid Transmission Word Detected state to transition to the Reset state (transition 6).

6.3.5.3.4 Second Invalid Transmission Word Detected state

When the procedure is in the Second Invalid Transmission Word Detected state, checking for an invalid Transmission Word shall be performed. Any invalid Transmission Word shall cause the Second Invalid Transmission Word Detected state to transition to the Third Invalid Transmission Word Detected state (transition 3). If two consecutive Transmission Words that are not Invalid Transmission Words are received, the Second Invalid Transmission Word Detected state shall transition to the First Invalid Transmission Word Detected state (transition 5). A Loss-of-Signal condition shall cause the Second Invalid Transmission Word Detected state to transition to the Loss of Synchronization state (transition 4). A reset condition imposed upon the receiver shall cause the Second Invalid Transmission Word Detected state to transition to the Reset state (transition 6).

6.3.5.3.5 Third Invalid Transmission Word Detection state

When the procedure is in the Third Invalid Transmission Word Detected state, checking for an invalid Transmission Word shall be performed. Any invalid Transmission Word shall cause the Third Invalid Transmission Word Detected state to transition to the Loss of Synchronization state (transition 3). If two consecutive Transmission Words that are not Invalid Transmission Words are received, the Third Invalid Transmission Word Detected state shall transition to the Second Invalid Transmission Word Detected state (transition 5). A Loss-of-Signal condition shall cause the Third Invalid Transmission Word Detected state to transition to the Loss of Synchronization state (transition 4). A reset condition imposed upon the receiver shall cause the Third Invalid Transmission Word Detected state to transition to the Reset state (transition 6).

6.3.5.4 Reset state

When a receiver reset condition is imposed on a receiver, either internally or externally, the receiver shall enter the Reset state (transition 6). Once the Reset state is entered, the receiver shall become not operational and shall remain in the Reset state until it is subsequently made operational by exiting the receiver reset condition.

NOTE 11 - A typical use of receiver reset is to force a receiver in the Loss of Synchronization State to attempt reacquisition of Bit Synchronization. Entry into this state does not necessarily indicate loss of Bit Synchronization.

When the receiver is operational after exiting from a receiver reset condition imposed upon it, either externally or internally, the receiver shall enter the Loss of Synchronization state.

NOTE 12 - The conditions required for a receiver in the Reset state to exit that state are not defined by this standard. Such conditions may be based on explicit indications. They may also be time-dependent in nature.

6.4 64B/66B Transmission Word Synchronization

6.4.1 Overview

64B/66B Transmission Word Synchronization state shall be maintained as specified by the Lock state machine and the BER monitor state machine of the Physical Coding Sublayer (PCS) for 64B/66B, type 10GBASE-R (see subclause 49.2.13 of IEEE 802.3-2015):

a) if the block_lock flag of the Lock state machine is TRUE, the hi_ber flag of the BER monitor state machine is FALSE, and the receiver is not indicating Loss-of-Signal, the receiver Transmission Word Synchronization state shall be Word Synchronization Acquired; and
b) if the block_lock flag of the Lock state machine is FALSE, the hi_ber flag of the BER monitor state machine is TRUE, or the receiver is indicating Loss-of-Signal, the receiver Transmission Word Synchronization state shall be Loss of Synchronization.

If a receiver is decoding 64B/66B that has been further encoded with FEC (see 5.3.1 and 9.2.3.7.2.1), loss of FEC block synchronization (see subclause 74.10 of IEEE 802.3-2015) is indicated by the value of the fec_signal_ok variable of the FEC block synchronization state machine. A value of FALSE for the fec_signal_ok variable of the FEC block synchronization state machine shall be treated as a Loss-of-Signal indication by the receiver.

The Lock state machine relies on the property of the 64B/66B Transmission code that a bit value transition is always encoded between the two least significant bits of a Transmission Word, and because of scrambling is unlikely to occur consistently at any other 66-bit period in the encoded bit stream.

Other than loss of Bit Synchronization, signal conditions (e.g., code violation detection) detected between expected synchronization headers do not affect the receiver Transmission Word Synchronization state during use of the 64B/66B transmission code.

6.4.2 64B/66B Transmission Word Synchronization for speed negotiation

If the link speed negotiation algorithm (see 8.6) is performed using 64B/66B, then the pass sync_test count shall be 1 000.

6.4.3 Detection of an invalid 64B/66B Transmission Word

An invalid 64B/66B Transmission Word shall be recognized by the receiver:

a) if both bits in the Synchronization Header have the same value, then the Transmission Word shall cause a code violation (i.e., Invalid Synchronization Header, see 5.3.4) to be reported;
b) if a Transmission Word type is decoded that is restricted in table 10, then the Transmission Word shall cause a code violation (i.e., Restricted Transmission Word type, see 5.3.6) to be reported;
c) if a control code value other than Idle or LPI (i.e., if the FC_Port supports Energy Efficient Fibre Channel), is decoded, then the Transmission Word shall cause a code violation (i.e., Restricted Control Code, see 5.3.6) to be reported;
d) if a restricted order code value is decoded, the Special Function shall cause a code violation (i.e., Restricted Order Code, see 5.3.6) to be reported;
e) an Idle followed by SOF Transmission Word shall cause a code violation (i.e., Idle followed by SOF error, see 5.3.6.2) to be reported if the Transmission Word received prior to receiving an Idle followed by SOF Transmission Word:
    A) was a data Transmission Word;
    B) was any Transmission Word containing an SOF; or

C) caused a coding violation to be reported;

f) an EOF followed by Idle or LPI Transmission Word shall cause a code violation (i.e., EOF followed by Idle or LPI error, see 5.3.6.3) to be reported if the Transmission Word received following receiving an EOF followed by Idle or LPI Transmission Word:

A) is a data Transmission Word;

B) is any Transmission Word containing an EOF; or

C) causes a coding violation to be reported;

g) an Other Special Function/SOF Transmission Word shall cause a code violation (i.e., Other Special Function / SOF error, see 5.3.6.7) to be reported if the Transmission Word received prior to receiving an Other Special Function/SOF Transmission Word:

A) was a data Transmission Word;

B) was any Transmission Word containing an SOF; or

C) caused a coding violation to be reported;

h) a SOF/data Transmission Word shall cause a code violation (i.e., SOF/data error, see 5.3.6.8) to be reported if the Transmission Word received prior to receiving an SOF/data Transmission Word:

A) was a data Transmission Word;

B) was any Transmission Word containing an SOF; or

C) caused a coding violation to be reported;

i) a data/EOF Transmission Word shall cause a code violation (i.e., data/EOF error, see 5.3.6.9) if the Transmission Word received following receiving a data/EOF Transmission Word:

A) is a data Transmission Word;

B) is any transmission word containing an EOF; or

C) causes a coding violation to be reported.,

j) if an Error Transmission Word is received, then a code violation (i.e., receiver detected error, see 5.3.6.10) shall be reported;

k) an RX_E transition error shall be reported if a transition from the:

A) RX_INIT state to the RX_E state;

B) RX_C state to the RX_E state;, or

C) RX_D state to the RX_E state occurs (see IEEE Std 802.3-2015, figure 49-17).

6.5 Transmitter Training Signal Transmission Word Synchronization

6.5.1 Introduction

Transmitter Training Signal Transmission Word Synchronization state shall be maintained as specified by the Frame lock state machine of the Physical Medium Dependent Sublayer and Baseband Medium, Type 10GBASE-KR (see subclause 72.6.10.4.1 of IEEE 802.3-2015), except that the condition for entry to the state machine is that the FC_Port initiates use of the Transmitter Training Signal. The training variable of the 10GBASE-KR Frame lock state machine shall be ignored:

a) if the frame_lock variable of the 10GBASE-KR Frame lock state machine is set to one and the receiver is not indicating Loss-of-Signal, the receiver Transmission Word Synchronization state shall be Word Synchronization Acquired; and

b) if the frame_lock variable of the 10GBASE-KR Frame lock state machine is set to zero or the receiver is indicating Loss-of-Signal, the receiver Transmission Word Synchronization state shall be Loss of Synchronization.

Transmitter Training Signal Transmission Word Synchronization relies on the properties of the Transmitter Training Signal that each Transmission Word begins with a 32 TUI frame marker pattern that appears nowhere else in any Transmission Word.

Other than an indication of Loss-of-Signal, the signal between expected frame markers shall not affect Transmitter Training Signal Transmission Word Synchronization state.

In the case of a DME coding violation, the Transmitter Training packet shall be ignored. See IEEE 802.3-2015 for definition of DME code violation.

6.5.2 Transmitter Training Transmission Word Synchronization for speed negotiation

If the link speed negotiation algorithm (see 8.6) is performed using Transmitter Training Signal, then the pass sync_test count shall be 300.

6.6 256B/257B Transmission Word Synchronization

6.6.1 Overview

Transmission Word Synchronization is performed on the stream of 64B/66B Transmission Words as follows:

1) given a candidate starting bit position for an RS-FEC code word, descramble the Transmission Word and compute the syndrome and if the syndrome is:
   a) not zero, then choose the next candidate starting bit position and return to step 1; and
   b) zero, then set good transmission words count to 1 and go to step 2;
2) descramble the next Transmission Word received, starting at the candidate bit position, and attempt to correct it and if the Transmission Word:
   a) contains errors but is not corrected, then choose the next candidate starting bit position and return to step 1; and
   b) is error-free or corrected, then:
      i) increment the good transmission words count;
      ii) If the good transmission words count is less than 2, then go step 2; and
      iii) If the good transmission words count is not less than 2, then set codeword_sync to true, set bad transmission words count to 0, and go to step 3;

   and
3) while codeword_sync is true, descramble and attempt to correct next received code word, and if the Transmission Word:
   a) is error-free or corrected, then set bad transmission words count to 0 and return to step 3;
   b) contains errors but is not corrected, then:
      i) increment the bad transmission words count;
      ii) if the bad transmission words count is less than 3, then return to step 3;
      iii) if the bad transmission words count is not less than 3, then set codeword_sync to false and return to step 1.

6.6.2 RS-FEC rapid code Word Synchronization process

The RS-FEC rapid code Word Synchronization process identifies the starting bit position of an RS-FEC code word and provides it to the Transmission Word Synchronization process to greatly reduce the time to achieve lock. It performs this function by searching for either of two known patterns that are sent by the transmitter when scr_bypass is set to TRUE (i.e., one pattern includes Idle control codes while the other includes LPI control codes).

Upon a transition from rx_mode=QUIET to rx_mode=DATA, the receiver suspends the Transmission Word Synchronization process and starts a timer whose duration is Trs. During this time, the RS-FEC rapid code Word Synchronization process attempts to identify either of the known patterns in the received bits.

When a known pattern is found, the corresponding starting bit position for the RS-FEC Codeword is passed to the Transmission word synchronization process which is then released and resumes normal operation.

If the timer expires before the known pattern is found, then the Transmission Word Synchronization resumes normal operation.

7 FC_Port state machine

7.1 Scope

The FC_Port state machine is a function of the FC-2P sublevel.

7.2 Introduction

An FC_Port shall conform to the FC_Port state machine that is composed of up to three partial state machines:

a) optional speed negotiation - An FC_Port in this partial state machine cycles through the speeds it supports until it has selected the highest speed supported by its connected FC_Port and the link that connects them (see clause 8). This partial state machine does not require that the FC_Port and its connected FC_Port have previously negotiated its use (i.e., the connected FC_Port may have a fixed speed or the connected FC_Port may also implement this partial state machine cycling through the speeds it supports);
b) optional transmitter training - An FC_Port in this state machine attempts to negotiate use of forward error correction and optimize transmitter equalizer coefficients with its connected FC_Port (see clause 9). This partial state machine requires that the FC_Port and its connected FC_Port have previously negotiated its use; and
c) mandatory normal operation (see 7.3).

If an FC-0 variant using the Transmitter Training Signal was either configured by administrative action or selected by the speed negotiation state machine, then the transmitter training partial state machine shall be performed. Otherwise, optional partial state machines are present or absent based on the requirements of other standards. Each partial state machine shall operate as specified in this standard. The FC_Port state machine shall be specified by the partial state machine transitions as specified by figure 49 and by the partial state machines. The Restart Link state is entered by failure of another partial state machine or by an event that is out of scope of this standard (e.g., power-on or administrative request).

Before starting transmitter training the FC_Port shall transmit a Transmitter Training Signal with the SN bit set to zero, and shall have received a Transmitter Training Signal with the SN bit set to zero.

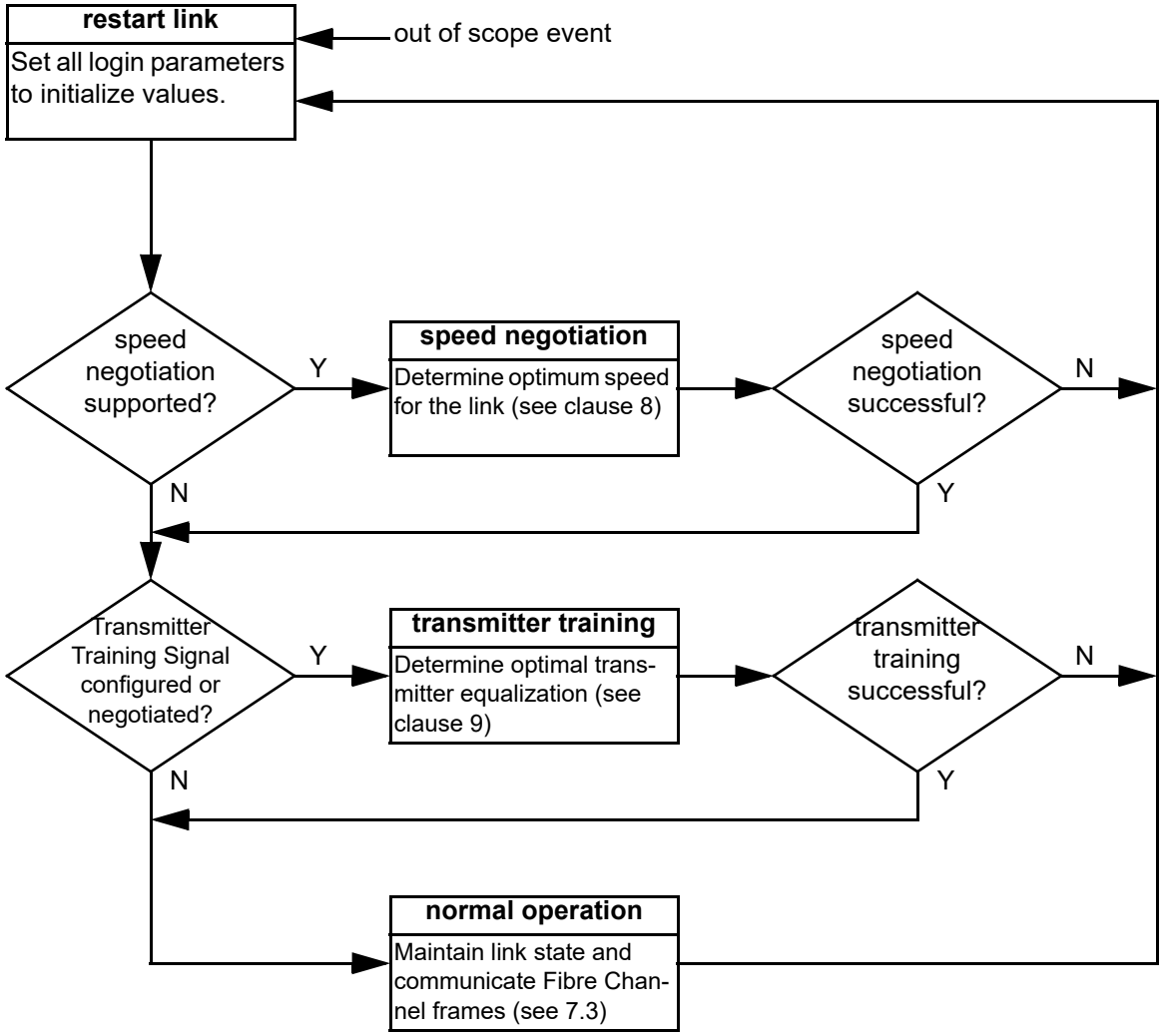

Figure 49 - FC_Port partial state machine transitions

7.3 Normal operation states

In normal operation, an FC_Port has successfully concluded any speed negotiation and transmitter training that it supports, and may be capable of transmitting and receiving Fibre Channel frames. In normal operation, port state is maintained by a protocol that includes four Primitive Sequences:

a) the NOS Primitive Sequence is transmitted to indicate that the FC_Port transmitting the NOS has detected a Link Failure condition or is Offline, waiting for OLS to be received;

b) the OLS Primitive Sequence is transmitted to indicate that the FC_Port transmitting the Primitive Sequence is:

   A) initiating the Link Initialization Protocol;

   B) receiving and recognizing NOS; or

C) entering the Offline State;

c) the LR Primitive Sequence is transmitted by an FC_Port to initiate the Link Reset Protocol or to recover from a Link Timeout (see 22.5.2); and

d) the LRR Primitive Sequence is transmitted by an FC_Port to indicate that it is receiving and recognizes the LR Primitive Sequence.

Normal operation for an FC_Port that is not operating a loop port state machine shall conform to table 26. For conditions not explicitly listed to cause state changes to occur, the FC_Port shall remain in the current state. See FC-AL-2 for normal operation of devices that support a loop port state machine.

Table 26 - FC_Port states

Current State	**Active**	**Link Recovery**			**Link Failure**		**Offline**		
	AC (see 7.4)	**LR1 (see 7.5.2)**	**LR2 (see 7.5.3)**	**LR3 (see 7.5.4)**	**LF1 (see 7.6.1)**	**LF2 (see 7.6.2)**	**OL1 (see 7.7.2)**	**OL2 (see 7.7.3)**	**OL3 (see 7.7.4)**
Primitive Sequence transmitted while in state	Fill Word [g]	LR	LRR	Idle	OLS	NOS	OLS	LR	NOS
Input Event:	**Next State:**								
L >> LR	LR2	LR2	LR2	LR2	LR2	LF2	LR2 [b]	LR2	LF2
L >> LRR	LR3 [c]	LR3	LR3	LR3	LF1	LF2	OL1	LR3	LF2
L >> Idles	AC	LR1	AC	AC	LF1	LF2	OL1	OL2	OL3
L >> OLS	OL2	OL2	OL2	OL2	OL2	OL2	OL2 [b]	OL2	OL2

Key: L >> means receiving from the Link
N/A means not applicable

[a] Depending on Laser safety requirements, the transmitter may enter a “pulse” transmission mode of operation when Loss-of-Signal is detected.

[b] All events are ignored until the FC_Port determines it is time to leave the OL1 state.

[c] A Primitive Sequence Protocol error is detected (An improper Primitive Sequence was received in this State). The Primitive Sequence Protocol error count in the LESB is incremented.

[d] The time-out period starts timing when NOS is no longer recognized and continues while none of the other events occur that cause a transition out of the state.

[e] The time-out period starts timing when OLS is no longer recognized and continues while none of the other events occur that cause a transition out of the state.

[f] The time-out period starts timing when the FC_Port is attempting to go online transmits OLS, and continues while none of the other events occur that cause a transition out of state.

[g] On entry to the Active State, an FC_Port shall transmit a minimum of 6 IDLES before transmitting other Transmission Words.

[h] An FC_Port that supports either speed negotiation or transmitter training shall instead perform actions specified for entry into state LF2 (see 7.6.2) and leave normal operation (see figure 49).

Table 26 - FC_Port states

Current State	Active	Link Recovery			Link Failure		Offline		
	AC (see 7.4)	**LR1 (see 7.5.2)**	**LR2 (see 7.5.3)**	**LR3 (see 7.5.4)**	**LF1 (see 7.6.1)**	**LF2 (see 7.6.2)**	**OL1 (see 7.7.2)**	**OL2 (see 7.7.3)**	**OL3 (see 7.7.4)**
L > > NOS	LF1	LF1	LF1	LF1	LF1	LF1	LF1 [b]	LF1	LF1
Loss-of-Signal	LF2	LF2	LF2	LF2	LF2	LF2 [a]	OL3 [b]	OL3 [a]	OL3
Loss of Sync >(R_T_TOV)	LF2 [h]	LF2 [h]	LF2 [h]	LF2 [h]	LF2 [h]	LF2 [h]	OL3 [b h]	OL3 [h]	OL3 [h]
Event time-out (R_T_TOV)	N/A	LF2	LF2	LF2	LF2 [d]	N/A	OL3 [b f]	OL3 [e]	N/A
Link time-out (E_D_TOV)	LR1	LR1	LR1	LR1	LR1	LR1	LR1	LR1	LR1

Key: L >> means receiving from the Link
N/A means not applicable

[a] Depending on Laser safety requirements, the transmitter may enter a “pulse” transmission mode of operation when Loss-of-Signal is detected.

[b] All events are ignored until the FC_Port determines it is time to leave the OL1 state.

[c] A Primitive Sequence Protocol error is detected (An improper Primitive Sequence was received in this State). The Primitive Sequence Protocol error count in the LESB is incremented.

[d] The time-out period starts timing when NOS is no longer recognized and continues while none of the other events occur that cause a transition out of the state.

[e] The time-out period starts timing when OLS is no longer recognized and continues while none of the other events occur that cause a transition out of the state.

[f] The time-out period starts timing when the FC_Port is attempting to go online transmits OLS, and continues while none of the other events occur that cause a transition out of state.

[g] On entry to the Active State, an FC_Port shall transmit a minimum of 6 IDLES before transmitting other Transmission Words.

[h] An FC_Port that supports either speed negotiation or transmitter training shall instead perform actions specified for entry into state LF2 (see 7.6.2) and leave normal operation (see figure 49).

7.4 Active State (AC)

An FC_Port shall enter the Active State when it completes the Link Initialization Protocol (see 7.8.2) or the Link Reset Protocol (see 7.8.3). Upon entry to the Active state an FC_Port shall transmit a minimum of 6 IDLE Primitive Signals before transmitting any other Primitive Signals and frames. After transmitting a minimum of 6 IDLE Primitives, the FC_Port may transmit other Primitive Signals and frames.

When an FC_Port is in the Active State, it is able to transmit and receive frames and Primitive Signals. When a Primitive Sequence (see 5.2.7.5 and 5.3.7.3) is received, the FC_Port shall exit the Active State as defined in table 26. If any frame or Primitive Signal (see 5.2.7.3 and 5.3.7.2) is received and recognized, the FC_Port shall remain in the Active State.

The Active state shall transition to other states to perform Primitive Sequence Protocols in conditions indicated by reference from table 27:

Table 27 - Transitions from the Active State

Primitive Sequence Protocol	Transition to State	Reference for transition conditions
Link Initialization	OL1	7.8.2
Link Reset	LR1	7.8.3
Link Failure	LF2	7.8.4
Online-to-Offline	OL1	7.8.5

An FC_Port may also transition from Active State on the reception of an LPI (see 10).

7.5 Link Recovery

7.5.1 Link Recovery hierarchy

The Link Recovery hierarchy is shown in figure 92.

7.5.2 LR Transmit State (LR1)

An FC_Port shall enter the LR1 State to initiate the Link Reset Protocol. While in the LR1 State, the FC_Port shall transmit the LR Primitive Sequence. When a Primitive Sequence is received, the FC_Port shall respond as defined in table 26.

Within the FC_Port, the BB_Credit_CNT value shall be set to zero. An Fx_Port shall process or discard any Class 2 or Class 3 frames currently held in the receive buffer associated with the outbound fibre of the attached FC_Port. The Class 2 EE_Credit value shall not be affected.

7.5.3 LR Receive State (LR2)

An FC_Port shall enter the LR2 State when it receives and recognizes the LR Primitive Sequence while it is not in the OL3 or LF2 State. While in the LR2 State, the FC_Port shall transmit the LRR Primitive Sequence. When a Primitive Sequence is received, the FC_Port shall respond as defined in table 26.

An FC_Port that receives and recognizes the Link Reset Primitive Sequence shall process or discard frames currently held in its receive buffers. Within the FC_Port, the BB_Credit_CNT value shall be set to zero.

7.5.4 LRR Receive State (LR3)

An FC_Port shall enter the LR3 State when it receives and recognizes the LRR Primitive Sequence while it is in the Active State, LR1 State, LR2 State, or OL2 State. While in the LR3 State, the FC_Port shall transmit Idles. When a Primitive Sequence is received, the FC_Port shall respond as defined in table 26.

7.6 Link Failure

7.6.1 NOS Receive State (LF1)

An FC_Port shall enter the LF1 State when it receives and recognizes the NOS Primitive Sequence. Upon entry into the LF1 State, the FC_Port shall update the appropriate error counter in the Link Error Status Block (see 22.4.8). Only one error per Link Failure event shall be recorded. When a Primitive Sequence is received, the FC_Port shall respond as defined in table 26.

7.6.2 NOS Transmit State (LF2)

An FC_Port shall enter the LF2 State when a Link Failure condition is detected. Upon entry into the LF2 State, the FC_Port shall update the appropriate error counter in the Link Error Status Block (see 22.4.8). Only one error per Link Failure event shall be recorded. The FC_Port shall remain in the LF2 State while the condition that caused the Link Failure exists. While in the LF2 State, the FC_Port shall transmit the NOS Primitive Sequence.

When the Link Failure condition is no longer detected, the FC_Port shall respond to Primitive Sequences received as defined in table 26.

NOS transmission by a PN_Port shall be received and recognized by the locally attached Fx_Port, but not transmitted through the Fabric. The Fx_Port shall respond by entering the LF1 State.

7.7 Offline

7.7.1 General

While Offline, an FC_Port shall not record receiver errors (e.g., Loss-of-Synchronization). NOS Reception or Link Failure conditions that are detected shall not be recorded as Link Failure events in the Link Error Status Block (see 22.4.8).

7.7.2 OLS Transmit State (OL1)

An FC_Port shall enter the OL1 State in order to:

a) perform the Link Initialization Protocol (see 7.8.2) in order to exit the Offline State; or
b) transition from Online-to-Offline using the Online-to-Offline Protocol (see 7.8.5).

When the FC_Port enters the OL1 State, it shall transmit OLS for a minimum time of 5 ms while ignoring any received data. After that period of time has elapsed, the FC_Port shall respond as defined table 26 when a Primitive Sequence is received.

NOTE 13 - The timeout value of 5 ms allows a Port to enter the Offline State in the absence of an appropriate response from the attached Port.

While an FC_Port is attempting to go Online, if no Primitive Sequence is received or event detected that causes the FC_Port to exit the OL1 State after R_T_TOV, the FC_Port shall enter the OL3 State.

OLS transmission by a PN_Port shall be received and recognized by the locally attached Fx_Port, but not transmitted through the Fabric. The Fx_Port shall respond by entering the OL2 State.

7.7.3 OLS Receive State (OL2)

An FC_Port shall enter the OL2 State when it receives and recognizes the OLS Primitive Sequence. When a Primitive Sequence is received, the FC_Port shall respond as defined in table 26. Detection of Loss-of-Signal or Loss-of-Synchronization shall not be counted as a Link Failure event in the Link Error Status Block.

7.7.4 Wait for OLS State (OL3)

An FC_Port shall enter the OL3 State when it detects Loss-of-Signal or Loss-of-Synchronization for more than a timeout period (R_T_TOV) while it is in the OLS Receive or Transmit State at an appropriate time during the Link Initialization Protocol (see 7.8.2).

Upon entry into the OL3 State, the FC_Port shall transmit the NOS Primitive Sequence. When a Primitive Sequence is received, the FC_Port shall respond as defined in table 26.

7.8 Primitive Sequence Protocols

7.8.1 Functions

Primitive Sequence Protocols provide two basic functions. The first function is to notify the other end of the link that a specific type of link error has occurred. The second function is to reset the link to a known state at both ends.

7.8.2 Link Initialization Protocol

The Link Initialization Protocol shall be performed by an LCF after one of the following events has occurred:

a) powered-on;
b) internal reset (the definition of internal reset is beyond the scope of this standard); or
c) has been offline and desires to come back online.

The LCFs involved may be a PN_Port and PF_Port or two PN_Ports.

The Link Initialization Protocol begins when the LCF enters the OL1 State after one of the above events has been detected and is complete when the LCF enters the Active State.

The Link Initialization Protocol results in implicit Fabric Logout (see FC-LS-4).

7.8.3 Link Reset Protocol

The Link Reset Protocol shall be performed when any of the following conditions are detected:

a) link timeout (see 22.5.2); or
b) buffer-to-buffer overrun (i.e., an FC_Port receives a frame subject to buffer-to-buffer flow control without a buffer available).

The Link Reset Protocol begins when the FC_Port enters the LR1 State after one of the above events has been detected and is complete when the FC_Port enters the Active State.

7.8.4 Link Failure Protocol

The Link Failure Protocol shall be performed after an FC_Port has detected one of the following conditions:

a) a Loss-of-Synchronization for a period of time greater than R_T_TOV;
b) Loss-of-Signal while not in the Offline State; or
c) Link Reset Protocol timeout error is detected (see 7.8.3).

The Link Failure Protocol begins when the FC_Port enters the LF2 State after one of the above events has been detected and is complete when the Active State is entered.

7.8.5 Online-to-offline Protocol

The FC_Port shall perform the Online-to-offline Protocol to enter the Offline State from the Active State. This protocol should be performed in order to power-down and shall be performed in order to perform diagnostics (diagnostic requirements are beyond the scope of this standard). This Protocol provides an FC_Port with a graceful indication prior to Loss-of-Signal. This avoids logging an error event for a normal system function. The Online-to-offline Protocol shall start when the FC_Port enters the OL1 State.

After transmitting OLS for the time specified in 7.7.2, the FC_Port shall be Offline and may do any of the following:

a) perform diagnostic procedures;
b) turn off its transmitter;
c) transmit any signal (excluding Primitive Sequences other than OLS) without errors being detected by the attached FC_Port;
d) power-down; or
e) start the Link Initialization Protocol.

NOTE 14 - After entering the OL1 State and transmitting OLS for a minimum of 5 ms, the FC_Port may then transmit any Transmission Word other than LR, LRR, NOS, or LIP without causing the remote FC_Port to leave the OL2 State.

8 Link speed negotiation

8.1 Scope

Link speed negotiation is a function of the FC-2P sublevel.

8.2 Speed negotiation overview

The optional speed negotiation method may be used to enable ports that are capable of multiple data transfer rates to establish in-band communications on a link (all port types). The term “speed” as used in this clause refers to the bit transfer rate. This method finds the highest speed common to the ports and to the infrastructure connecting the ports. Each port may support up to a maximum of 4 speeds in the negotiation process. The exact speeds are not specified. Different ports may negotiate with different speed ranges up to a maximum of 4 speeds each and speed negotiation shall converge provided there is at least one common speed. The link quality for speed negotiation purposes is error free Transmission Word Synchronization for a minimum number of Transmission Words specified in clause 6 as the pass sync_test count for the transmission code being used.

Because the link quality requirements for speed negotiation are not as stringent as for other operations it is possible to complete speed negotiation yet have an excessive error rate in other operations. Determination of excessive error rate outside of speed negotiation may be as specified for transmitter training (see 9.2) or by vendor specific methods. The response to a determination of excessive error rate in transmitter training is to re-enter speed negotiation, having eliminated the faulty speed from negotiation. The response to a vendor specific determination of excessive error rate may also be to re-enter speed negotiation, having eliminated the faulty speed from negotiation. A speed, having been eliminated, is restored to subsequent speed negotiation upon vendor specific determination that the reliability of the link at that speed may have improved (e.g., detection of physical disconnect and reconnect of the link, or an administrative action out of scope of this standard).

Transceivers may be able to transmit and detect error free bit streams even though they and other link elements were not designed or specified for operation at the speed being used. This condition may allow links to achieve Transmission Word Synchronization and satisfactory error rates but with degraded margin. It is up to the implementer to ensure that the elements of the physical plant are designed to comply with the requirements specified for operation at the set speed.

Once a particular speed has been established, speed negotiation is not attempted again unless a Signal Failure is detected. Speed negotiation may disrupt communication in excess of a second. An FC_Port capable of the speed negotiation procedure shall initiate Speed negotiation upon power on or Signal Failure. For this purpose, Signal Failure shall be presumed to pertain only in the following circumstances:

a) the port receiver circuit has indicated Loss of Signal;
b) the port receiver has remained in "Loss of Synchronization" state for a time in excess of R_T_TOV; or
c) the port transceiver has been reset by means other than power on.

An FC_Port should not initiate speed negotiation for other reasons.

8.3 Link physical architecture and requirements

The physical architecture of the link is assumed to be as shown in figure 50.

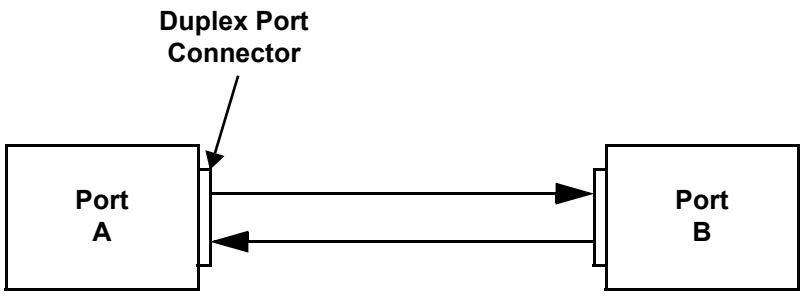

Figure 50 - Physical architecture of the speed negotiating link

There are several points derived from this physical architecture that bear on the speed negotiation algorithm:

a) only point-to-point links are supported;

b) loop configurations that negotiate speeds shall present a single port to the other negotiating port for speed negotiation purposes;

c) the speed negotiation algorithm is specified for only one port at a time (i.e., when port “A” is involved, the term transmitter applies only to the transmitter in port “A” and the term receiver applies only to the receiver in port “A”). The algorithm may be executing on both ports at the same time;

d) no requirements are explicitly placed by the algorithm on the means for controlling the transceiver speed capabilities. However:

   A) ports implementing this algorithm shall not attain Transmission Word Synchronization unless the incoming signal is within ±10% of the receive rate set by the port implementing the algorithm;

   B) the transmitter shall have a Transmitter Stabilization Time for each speed it negotiates (see 8.6.7);

   C) the receiver shall have a Receiver Stabilization Time for each speed it negotiates (see 8.6.7); and

   D) if the sum of the Receiver Stabilization Time plus one fifth of the Transmitter Stabilization Time exceeds 28 ms for a speed (see 8.6.7), speed negotiation shall not be conducted for that speed;

e) a stable physical environment (fully mated connectors, no power cycles, no cable flexing, no transient noise sources, etc.) is expected during speed negotiation. Otherwise, speed negotiation may settle to a sub-optimum speed. The algorithm is capable of handling the normal connection start up transients caused by the connector insertion process (e.g., such transients include contact bounce and partial optical coupling). Sub-optimal speed may result if the connection start up transient conditions persist for more than a few milliseconds. Sub-optimal speed may also result if connectors between devices in the process of negotiating are demated and then remated within three seconds;

f) the transmitter and receiver shall be capable of working at different speeds at the same time during speed negotiation;

g) the algorithm supports ports capable of up to a maximum of any 4 speeds; and

h) if an L_Port configured for speed negotiation is attached to a loop, the L_Port either:
   A) is being attached to a port in the loop that presents a single speed and does not perform speed negotiation; or
   B) is being attached to a port in the loop that completes the speed negotiation algorithm described here before inserting the L_Port into the loop.

8.4 Speed negotiation requirements on L_Ports

Removal of an L_Port from a loop shall not cause speed negotiation to occur on the remaining loop. This requirement applies even if the removal of the L_Port allows negotiation of a higher common speed.

As an option to negotiating each hub port per the algorithm, multiple speed hubs may be set to a single speed during speed negotiation by some out-of-band means.

8.5 Primitives

8.5.1 Overview

For FC_Ports that do not support the Transmitter Training Signal, either OLS or NOS (for ports not operating in Arbitrated Loop topology) or LIP (for ports operating in Arbitrated Loop topology) shall be the only signals transmitted during speed negotiation.

For FC_Ports that support the Transmitter Training Signal:

a) if the FC_Port is transmitting using media and speeds that support the Transmitter Training Signal (see FC-PI-x), then the Transmitter Training Signal shall be transmitted during speed negotiation;
b) if the Transmitter Training Signal (see 5.6.2) is transmitted during speed negotiation, then the SN field in the Training Status field shall be set to one;
c) if the FC_Port is transmitting using media and speeds that do not support the Transmitter Training Signal, then either OLS or NOS (for ports not operating in Arbitrated Loop topology) or LIP (for ports operating in Arbitrated Loop topology) shall be transmitted using the required frame transfer transmission code (see FC-PI-x) during speed negotiation;
d) if the FC_Port is receiving on media at speeds that support the Transmitter Training Signal, then Transmitter Training Signal Transmission Word Synchronization shall be attempted during speed negotiation;
e) if the Transmitter Training Signal is received during speed negotiation, then the setting of the fields in the Training Frame Control field (see table 17) and the Training Frame Status field (see table 18) shall be ignored, except for:
   A) Parallel Lane Support (i.e., Training Frame Control field bit 10);
   B) Extended Marker (i.e., Training Frame Control field bits 14 and 15); and
   C) SN (i.e., Training Frame Status field bit 14).
f) if the FC_Port is receiving on media at speeds that do not support the Transmitter Training Signal, then Transmission Word Synchronization for the required frame transfer transmission code shall be attempted during speed negotiation.

If a PN_Port negotiates among multiple physical variants that use different transmission codes, the transmission code changes (e.g., from Transmitter Training Signal to 8B/10B and back) during speed negotiation, and the transmitter uses a different transmission code than the receiver at some times.

8.5.2 32GFC speed negotiation

For 32GFC the Transmitter Training Signal specified in 5.6 is used for speed negotiation. For copper links, transmitter training is performed if requested. For optical links transmitter training is outside the scope of the standard. Bit 10 in the Control field of the Training Frame shall be set to zero during speed negotiation.

8.5.3 64GFC speed negotiation

For 64GFC, the Transmitter Training Signal specified in 5.6 is used for speed negotiation. 64GFC capability is indicated by setting Training Frame Control Field bits 15:14 (Extended Marker) to 10b.

For links that negotiate to 64GFC, the completion of LSN is always followed by mandatory Transmitter Training for all link types. For optical links the Training Frame Status field bit 12 (TF) is set to one which signals that the transmitter is operating with fixed coefficients. Even though the Transmitter is operating with fixed coefficients, Transmitter Training allows time for the Local Rx Equalization to complete adaptation to a PAM4 signal, enabling robust link performance. The completion of Transmitter Training is signaled by setting Training Field Status bit 15 (Receiver Ready) to one.

8.5.4 128GFC and 256GFC speed negotiation

For 128GFC and 256GFC links speed negotiation shall be performed independently on all lanes. A link that supports 128GFC or 256GFC operation shall set bit 10 in the Training Frame Control field of the Training Frame (see table 17) on every lane to one if it desires to come up as a 128GFC or 256GFC link. The state machine transitions for speed negotiation on a 128GFC or 256GFC link are as shown in figure 51.

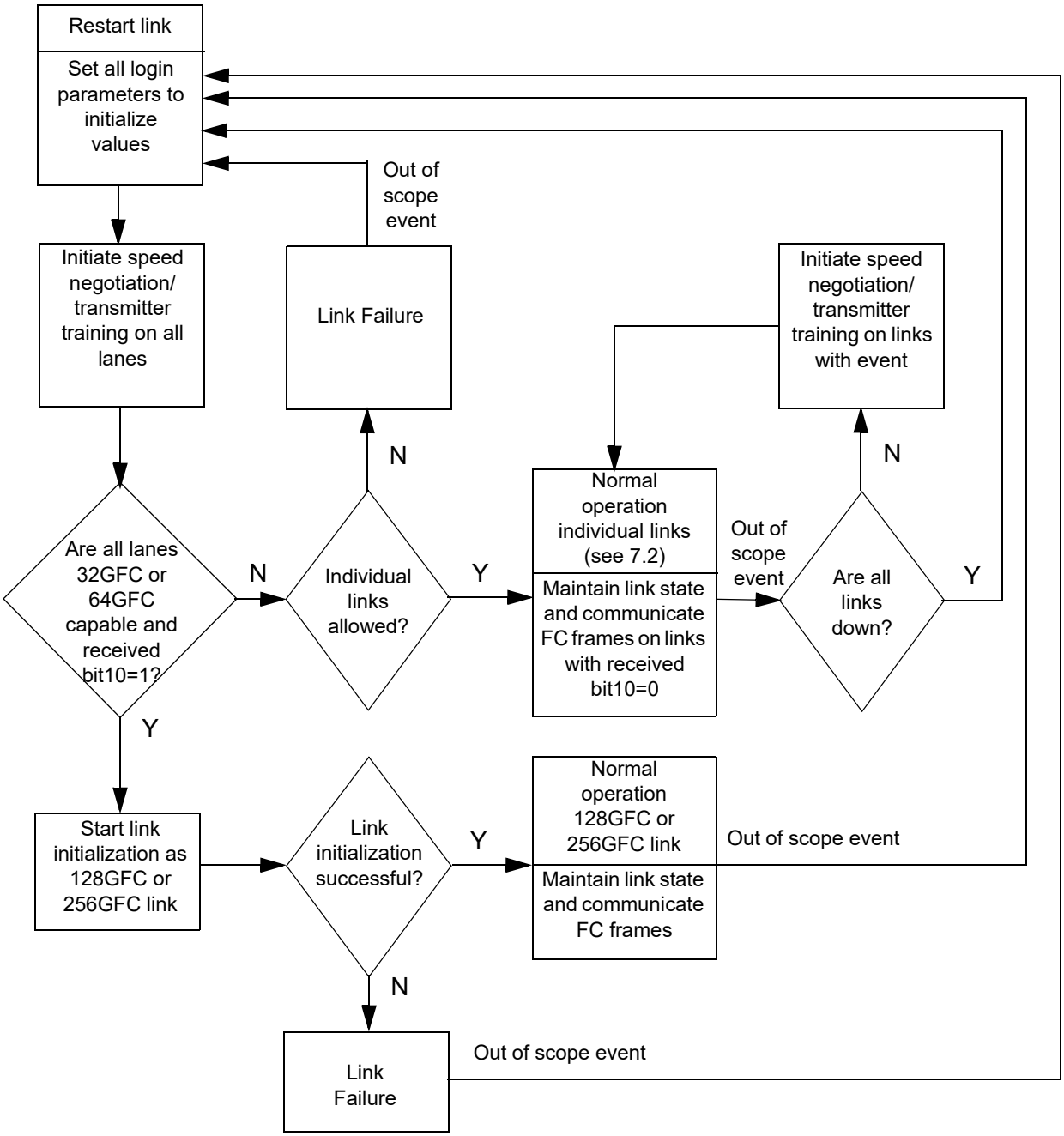

Figure 51 - 128GFC and 256GFC speed negotiation state machine

The ‘Out of scope event’ in the state diagram occurs if any of the following conditions are true on a 128GFC and a 256GFC link:

a) Loss-of-Signal; or
b) Loss-of-Synchronization.

If parallel lanes are supported as indicated by receiving Training Frame Control field bit 10 set to one on all lanes and all the lanes negotiate to a speed of 32GFC or 64GFC, then the link may be able to operate at 128GFC or 256GFC. If link initialization is successful, then the link shall enter normal operation as a 128GFC or 256GFC link. If link initialization is unsuccessful as a 128GFC or 256GFC link, then the link transitions to the Link Failure State and transitions to the Restart Link state if an out of scope event occurs.

If any of the lanes do not support 32GFC, 64GFC, or parallel lanes are not supported as indicated by receiving Training Frame Control field bit 10 set to 0 on any lane, then 128GFC and 256GFC is not supported and the lanes may operate as individual links at the highest negotiated speed. A link that supports 128GFC or 256GFC operation may support individual links of 16GFC, 32GFC, and 64GFC. Support for individual 32GFC or 64GFC links is allowed only if the value of bit 10 in the Training Frame Control field received is zero during speed negotiation.

If a lane is operating as an individual link and it becomes inoperable due to an out of scope event, and all four lanes are in the link failure state, then the state machine transitions to the Restart Link state and speed negotiation is performed as a 128GFC or 256GFC link. If all four lanes are not in the link failure state, then speed negotiation is performed only on the failed link.

8.5.5 Single lane 128GFC speed negotiation

For single lane 128GFC, the Transmitter Training Signal specified in 5.6 is used for speed negotiation. Single lane 128GFC capability is indicated by setting Training Frame Control Field bits 15:14 (Extended Marker) to 01b. In addition, the Transmitter Training Signal allows enabling of either Single Reed-Solomon or Interleaved Reed-Solomon and either Bit Interleaving or Symbol Forwarding.

For links that negotiate to single lane 128GFC, the completion of LSN is always followed by mandatory Transmitter Training for all link types. For optical links the Training Frame Status field bit 12 (TF) is set to one which signals that the transmitter is operating with fixed coefficients. Even though the Transmitter is operating with fixed coefficients, Transmitter Training allows time for the Local Rx Equalization to complete adaptation to a PAM4 signal, enabling robust link performance. The completion of Transmitter Training is signaled by setting Training Field Status bit 15 (Receiver Ready) to one.

8.6 Speed negotiation algorithm

8.6.1 Algorithm overview

Figure 52 shows an overview of the speed negotiation algorithm. Dashed lines indicate optional features.

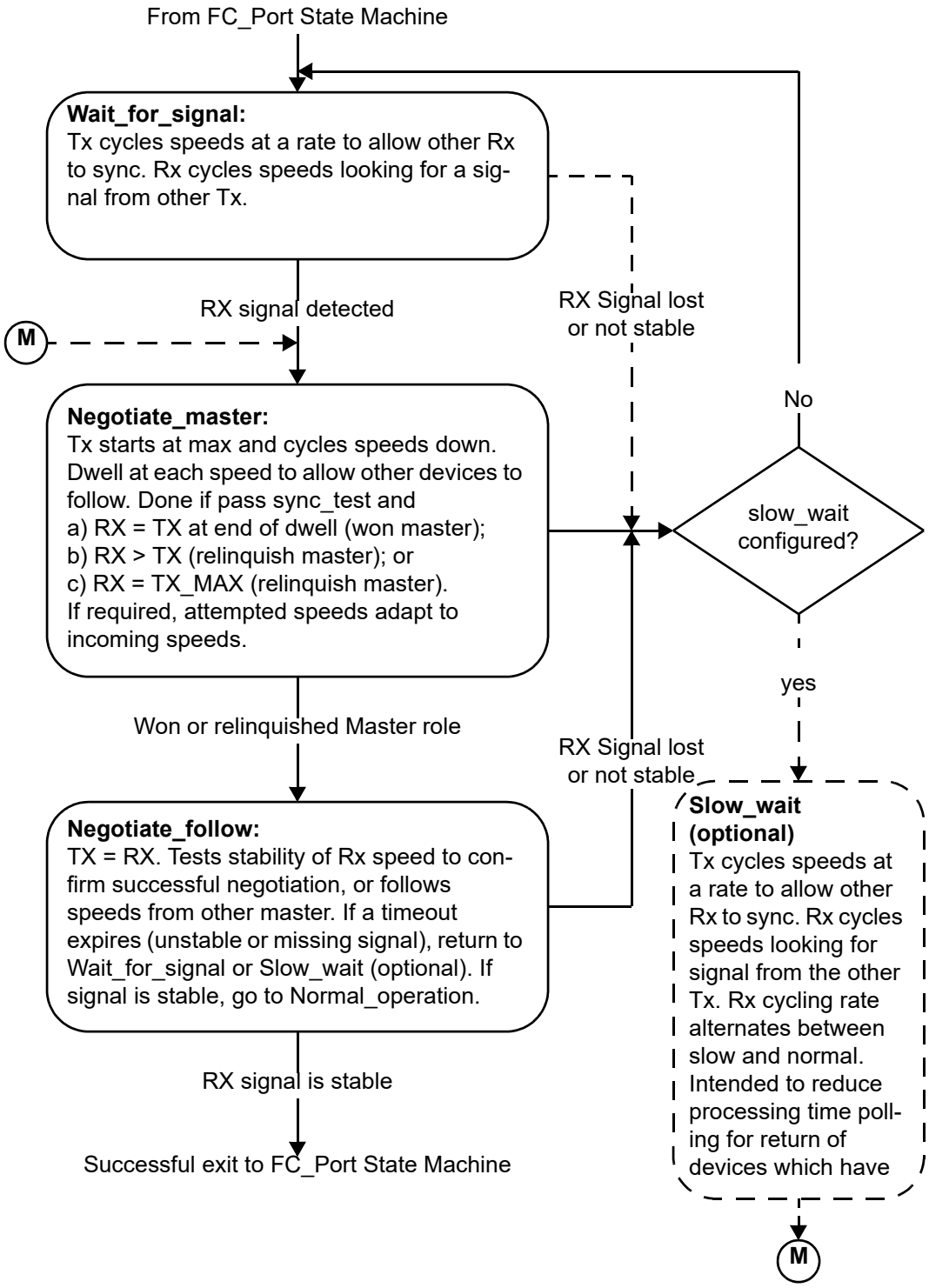

Figure 52 - Overview of the speed negotiation algorithm stages

8.6.2 Speed Negotiation stage specification conventions

8.6.2.1 Diagramming conventions

A stage is a period of time during which a PN_Port conducting Speed Negotiation performs a repeating series of activities in order to determine some major condition of the link to which it is attached (see figure 52). Each stage is specified by a stage diagram and its associated text.

For the stage diagrams of 8.6, the following concepts and diagramming symbols (see figure 53) are used:

a) a state is a specific activity within a specific stage. Depending on the type of state, different symbols are used. For reference from text, the symbol for each state has a numeric identifier in one corner;
b) a path specifies that a state may be followed by a successor state. The symbol for a path is a line with an arrowhead directed from the state to the successor state;
c) an action state sets variables and conditions that control subsequent action or capture the results of prior action. The symbol for an action state is a rounded rectangle shape;
d) a decision state has more than one successor among which it selects by the result of a test. The symbol for a decision state is a diamond shape, each path from which is labelled with the result that causes it to be selected. A “yes” result may be abbreviated as “Y”, and a “no” result may be abbreviated as “N”;
e) a delay-and-test state is a decision state that operates for a specific time period at current settings before performing the indicated test (see figure 54). The symbol for a delay-and-test state is a boldface diamond shape, each path from which is labelled with the result that causes it to be selected; and
f) within diagrams for required stages, paths and states that are optional to implement are indicated by symbols composed of dashed lines.

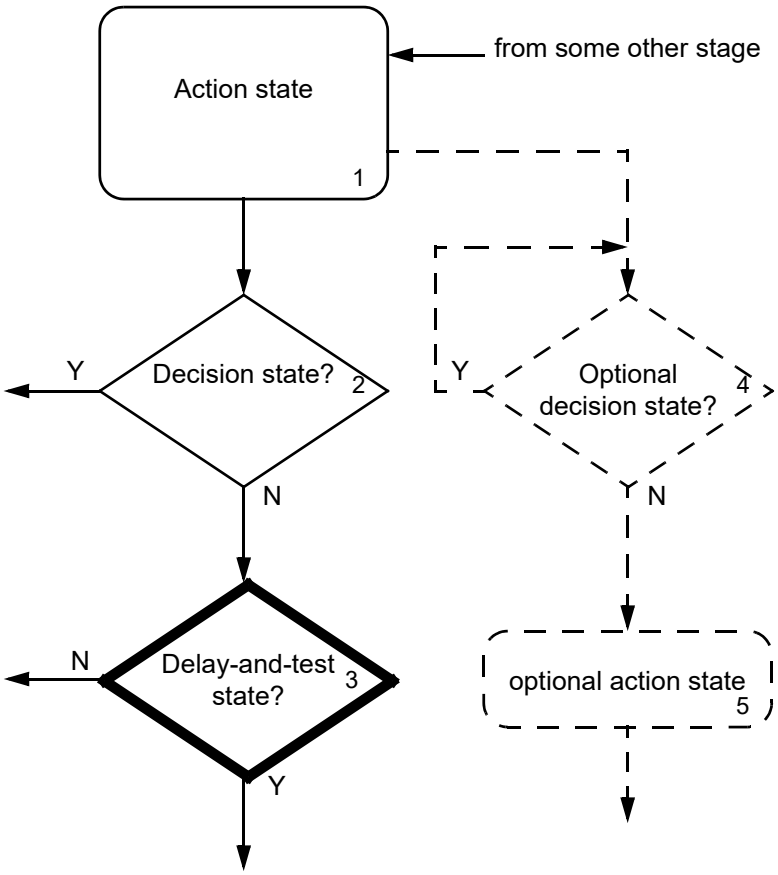

Figure 53 - Stage diagram symbols

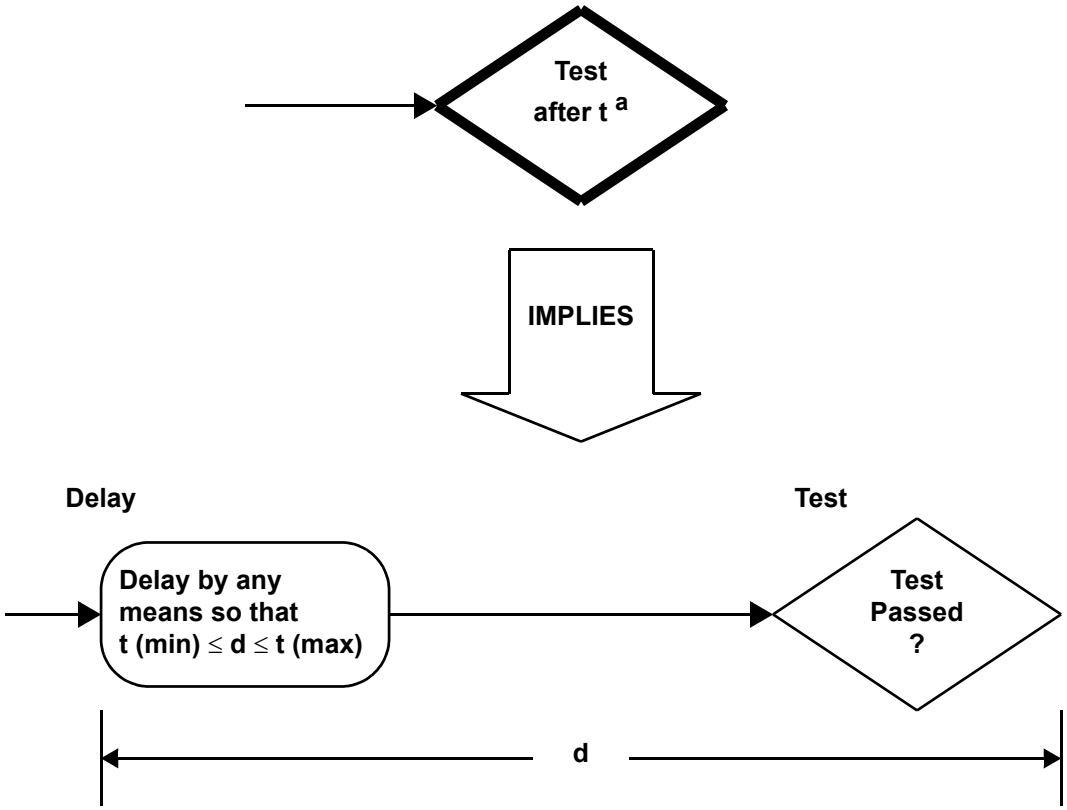

[a] t is a timing variable with minimum value t (min) and maximum value t (max)

Figure 54 - Delay / test operations

8.6.2.2 Terminology

In the stage diagrams in 8.6, the following terminology is used:

Speeds

a) Tx speed list refers to the set of speeds that are currently available for negotiation by the Port. The Tx speed list may change during Negotiate_master. Transmit speed changes in the algorithm shall always be based on the Tx speed list that is currently set;

b) there is no explicit Rx speed list, since the receiver is always cycled through all speeds it supports;

c) recorded Rx list refers to a list of the signal speeds at which pass sync_test has succeeded;

d) RX_MAX refers to the maximum Rx speed; TX_MAX refers to the maximum speed in the current Tx speed list;

e) TX refers to the present transmitter speed; RX refers to the receiver speed;

f) TxNext(xxx) is the next speed less than xxx in the Tx speed list if there is a lower speed; otherwise it is the highest speed in the Tx speed list; and

g) RxNext(xxx) is the next speed less than xxx among all speeds supported by the port if there is a lower speed; otherwise it is the highest speed supported by the port.

Timing

a) pass sync_test decision blocks (states 11, 21, 27, 34, 52, 56) requires that Transmission Word Synchronization be maintained for a monitoring period that shall equal or exceed receiving the pass sync_test count (see clause 6) of consecutive Transmission Words for the transmission code being used. The period of monitoring shall not exceed 100 microseconds. Counting of code violations may be used for the monitoring period to ensure robustness, if available to the firmware. If 64B/66B transmission code is used, then code violations shall be counted for the monitoring period. If counted, then the number of errors allowed shall be zero. If the number of errors is not zero, then Transmission Word Synchronization (Pass sync_test decision blocks) is not considered to have occurred and a different speed is negotiated or the algorithm does not converge;

b) in contrast, Sync decision block in state 31 is Transmission Word Synchronization per clause 6;

c) in figures 55, 56, 57, and 58 a decision diamond with a bold-face outline indicates that a delay and a test are combined (see figure 54). In operations so indicated:

   A) other activity may be implemented before the test is performed;

   B) the test shall be completed after the minimum and before the maximum values of the delay time parameter; and

   C) the actual delay time may vary from test to test, but the test shall fall within the specified limits;

d) all flowchart atoms (action boxes or decision diamonds) that do not have a bold-face outline shall execute in less than 100 microseconds, and no delays shall accrue between atoms (bold-face outline or not);

e) elapsed-time timers are compared against constants in several places:

   A) t_{tx}, t_{neg}, and t_{sync} start where shown being (re)set to 0 in the algorithm;

   B) t_{tx} is compared against t_txcycl;

   C) t_{neg} is compared against t_fail;

   D) t_{sync} is compared against t_stbl; and

   E) t_{nc} is compared against t_ncycl and may be set at several different places;

   and

f) the R_T_TOV watchdog timer begins anytime Transmission Word Synchronization is lost during Normal_operation. Because elapsed-time counters are tested at intervals determined by a preceding delay-and-test decision (see bullet above relating to decision diamonds), the actual elapsed time determined by the elapsed-time counter test may vary from the value of the counter up to its value plus the length of the delay. In most instances, the delay may be as much as the maximum value of the range of t_rxcycl. This value was chosen to tolerate the response times of typical operating system kernels.

8.6.3 Stage 1 - Wait_for_signal

Figure 55 shows the flowchart for the Wait_for_signal stage.

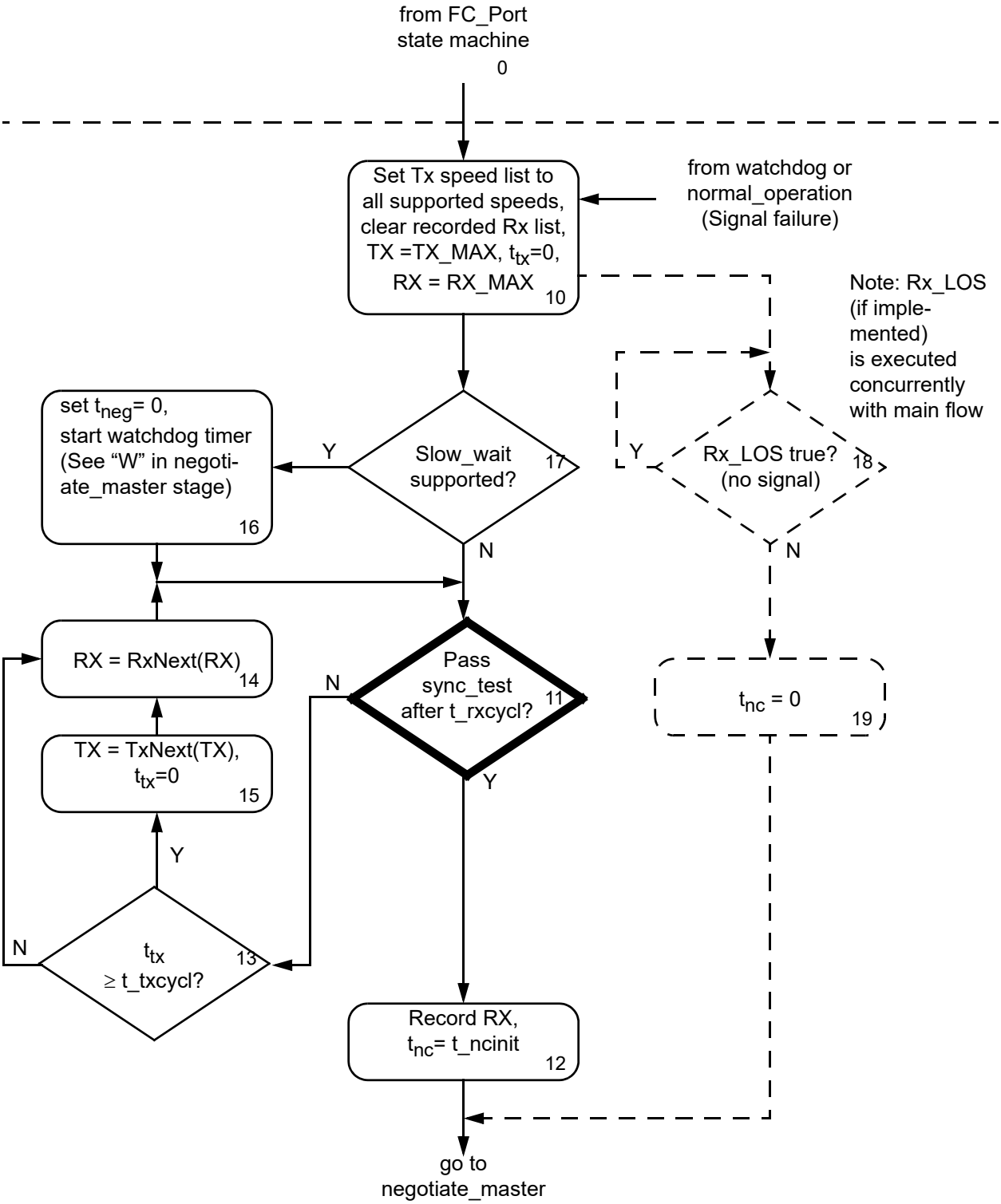

Figure 55 - Wait_for_signal flowchart

Description

a) the device sets default parameters in state 10. States 11, 13, 14 cycle Rx speeds looking for the presence of an incoming signal from the other device that is adequate to pass the Pass sync_test. If found, RX is recorded, and the device moves onto Negotiate_master;

b) Tx speeds are cycled slowly compared to the time spent in 1 Rx speed. This allows the receiving side of the opposite Port to cycle through at least 5 Rx speeds at each transmitted speed before the transmitted speed changes;

c) monitoring for synchronization is performed as part of the test in state 11. Should the period of monitoring satisfy the definition of “Pass sync_test” decision blocks above, the reception of this speed shall be recorded and t_{nc} shall be set to t_ncinit (state 12);

d) if the slow_wait optional stage is implemented, the watchdog timer diagrammed in figure 56 and described in 8.6.4 shall be initiated after entry to the wait_for_signal stage. If the slow_wait optional stage is not implemented, the watchdog timer shall be initiated at entry to the Negotiate_master stage but not initiated in the Wait_for_signal stage; and

e) prior to entering state 10 from power on and ready condition, a port capable of speed negotiation shall be considered incapable of participating in normal protocol, so its transmitter shall be disabled and nothing shall be transmitted until its transmitter is enabled in the course of step 10 (see FC-PI-x).

Rx_LOS, if implemented (see dashed lines in figure 55), may be used in addition to periodically monitoring for receiver synchronization. If this option is implemented, Rx_LOS may be monitored by any means and at any time during the wait_for_signal stage after execution of block 10. If Rx_LOS becomes false, the algorithm transitions to the Negotiate_master stage without recording a received speed. In some configurations, Rx_LOS negation may occur in the absence of an active attached device. This may cause spurious entry into Negotiate_master.

8.6.4 Stage 2 - Negotiate_master and Watchdog timer

Figure 56 shows the flowchart for Negotiate_master and Watchdog timer.

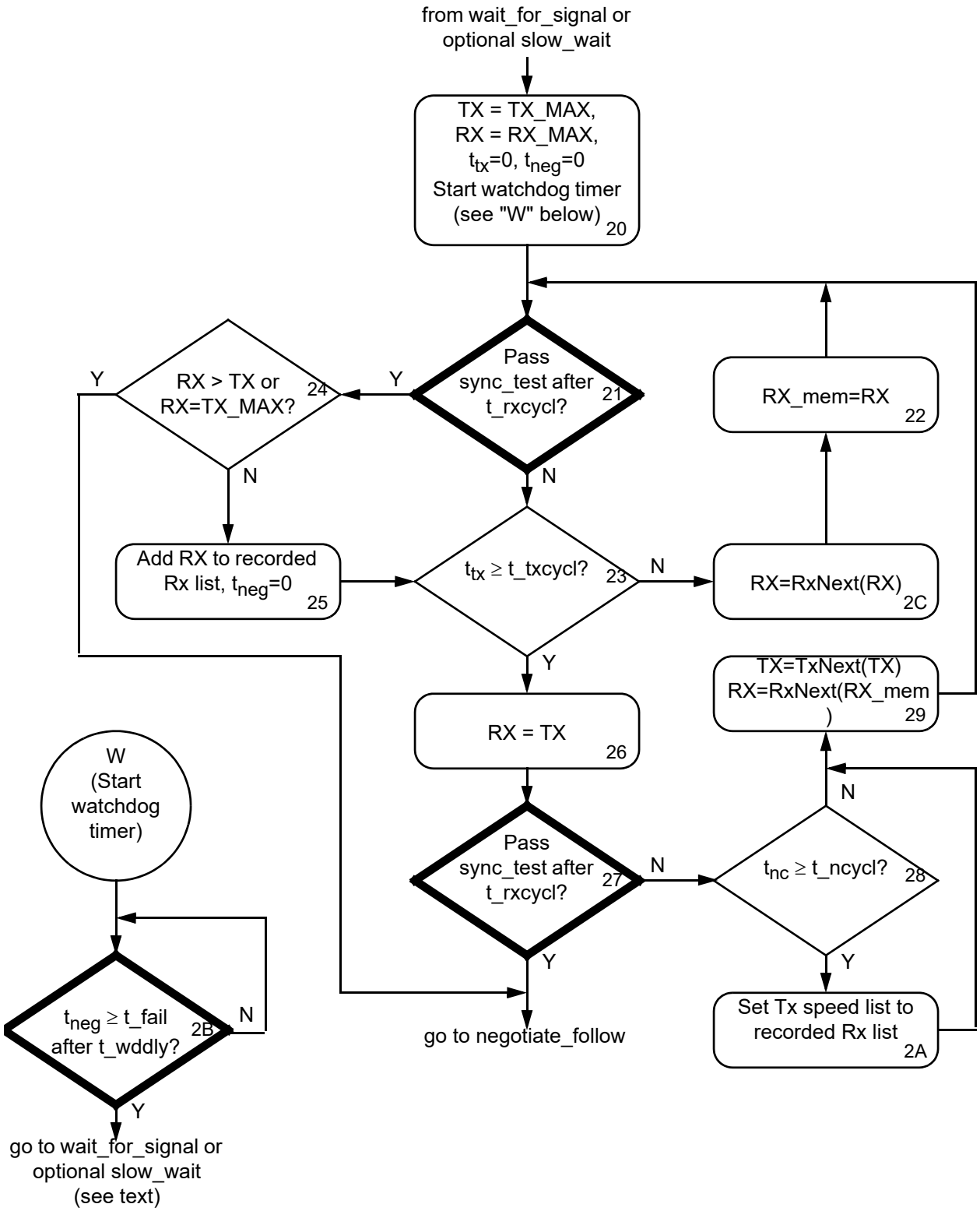

Figure 56 - Negotiate_master and watchdog timer flowchart

Description:

a) the general operation of the algorithm is to start at the highest speed and step down until both devices agree on a speed. Lower speeds are tried only if higher speeds fail;

b) states 23 & 26-2A control TX. A transmit speed is forced (starting at the highest speed) for sufficient time (t_txcycl + t_rxcycl) for the other device to pass the Pass sync_test and follow (see 8.6.5) and return TX back to the master. If NO from state 27, another (lower) Tx speed is attempted; if YES, the master role is assumed to be successful, and the algorithm moves to state 30 in Negotiate_follow;

c) there are two conditions that may cause YES in state 27: (1) the other device is in follow mode as described above, and (2) the other device is also in master mode transmitting at the same speed. If the latter, the master role is effectively relinquished to the other master;

d) if the port has had sufficient time to detect all possible speeds (maximum of 4 speeds) from the other port, but master role has not completed, states 28 & 2A adapt the Tx speed list to the incoming speeds recorded in the Rx list (state 25). This is usually does not occur unless the cable plant only supports a limited set of speeds;

e) states 21-25 control RX. To constantly monitor for an incoming rate that is higher than TX or equal to the maximum rate in the Tx speed list. If such a speed is found (Pass sync_test passed), the device relinquishes its master role to the other device, and transfers to the Negotiate_follow stage; and

f) a watchdog timer, t_{neg}, keeps track of time between passed Pass sync_tests (states 11, 21, 27, and 34). If t_{neg} exceeds t_fail the port enters Slow_wait if the optional slow_wait stage is implemented and enabled. If the optional Slow_wait stage is not implemented the Port returns to wait_for_signal if t_{neg} exceeds t_fail.

Rx_LOS shall not be used during Negotiate_master stage.

8.6.5 Stage 3 - Negotiate_follow

Figure 57 shows the flowchart for the Negotiate_follow stage.

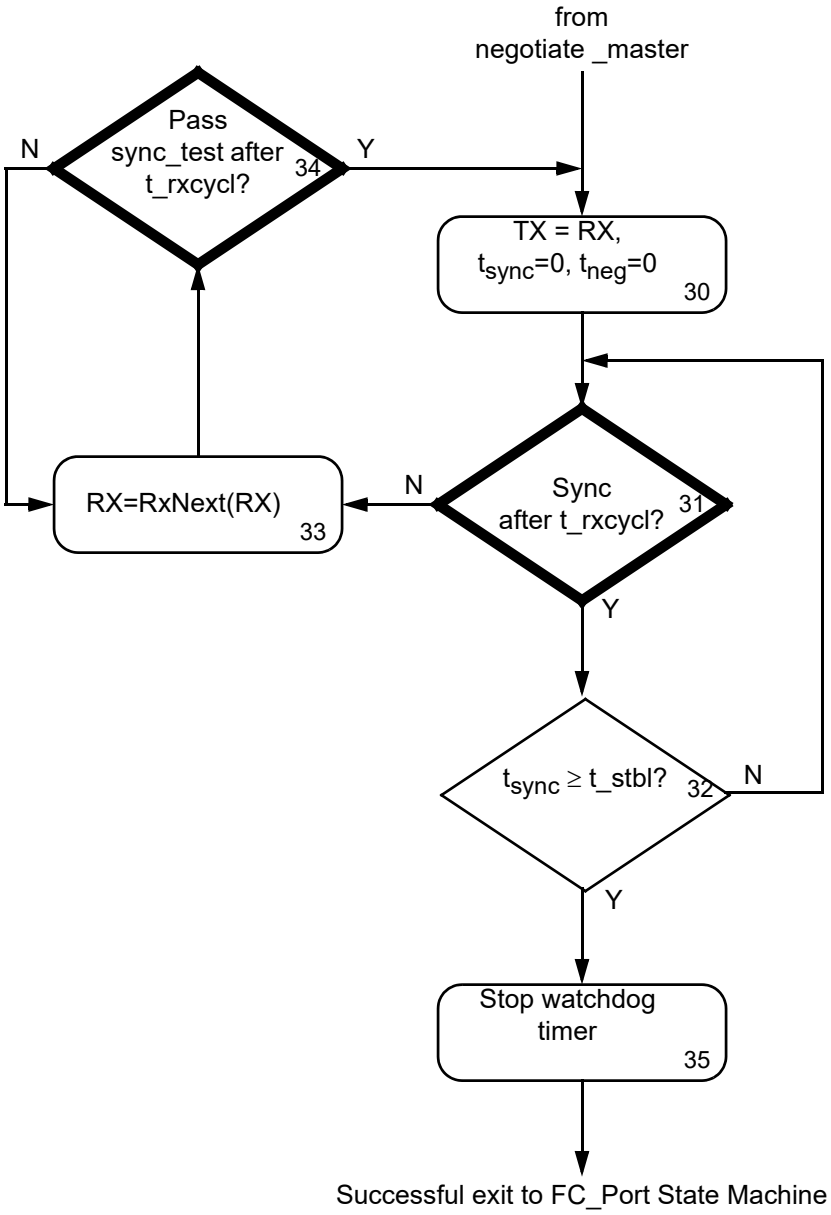

Figure 57 - Negotiate_follow flowchart

Description:

a) a Port in the Negotiate_follow stage attempts to transmit its incoming speed;

b) if sync is lost (e.g., due to an incoming signal speed change), the port seeks sync at another Rx speed. If obtained, TX is adjusted to follow the new RX, and the test for t_stbl starts over;

c) this continues until sync is held for at least t_stbl in state 31 (in the case where the other master is not driving other speeds). During this time, TX and RX have been matched, allowing the other device to come to a YES decision in state 27. After t_stbl, the Port returns to the FC_Port state machine (see 7.2) indicating successful Speed Negotiation; and

d) the same watchdog timer used in Negotiate_master is also used in Negotiate_follow.

Rx_LOS shall not be used during Negotiate_follow stage.

8.6.6 Optional Stage 5 - Slow_wait

Upon watchdog timer expiration, the Slow_wait stage may be entered as an alternative to returning to the Wait_for_signal stage. Its implementation is optional, and if implemented, its use may be a configuration option. Use of this optional stage reduces by approximately 80% the processing time required to monitor a Port that does not receive a valid signal at any supported speed (e.g., not cabled). However, the response to a signal being presented may be delayed by up to t_sleep (see table 29). Figure 58 shows the flowchart for the optional slow_wait stage.

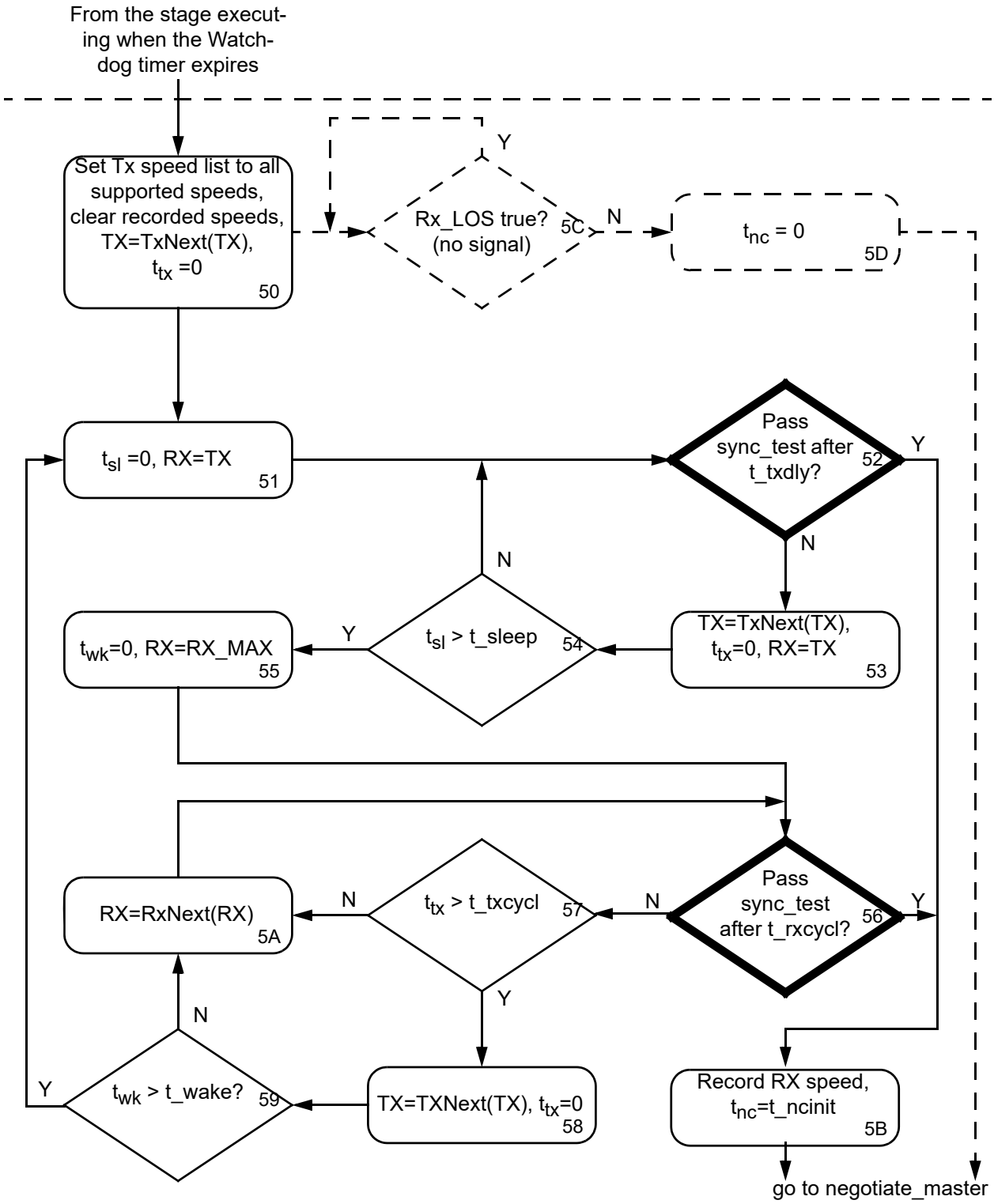

Figure 58 - Slow_wait flowchart

Description:

a) entry into the Slow_wait stage occurs when the watchdog timer expires regardless of the stage executing when the expiration occurs;
b) the device sets default parameters in state 50. Transmit speed cycling begins here and is uninterrupted throughout this stage, independent of cycling between slow and normal receiver speed changes;
c) state 51 initializes the sleep timer that defines the low processing load portion of the algorithm (states 52, 53, and 54);
d) states 52, 53, and 54 cycle both transmitter and receiver speeds at the normal transmitter speed cycling rate, checking for synchronization with any incoming signal from the upstream device before each speed change. Limiting the transmit time at each speed allows a downstream device to detect sync but not exit prematurely from Negotiate_follow. The synchronization test enables prompt synchronization to a fixed speed upstream device, reducing loop disruption upon attachment to a hub, or to an upstream device in Negotiate_follow stage. Processing load is reduced because the normal transmitter speed cycle is approximately one fifth the rate of the normal receiver speed cycle. This loop exits after operating for time t_sleep, or it transits to the Negotiate_master stage if synchronization is detected at the transmitted speed;
e) states 55 initializes the receive speed and the wake timer for a period of normal receiver speed cycling; and
f) states 56, 57, 58, 59, and 5A continue to cycle transmitter speeds but now cycle receiver speeds at their normal rate. This continues to present a signal for the downstream device to synchronize, while now attempting to synchronize with a negotiating upstream device. During this period, the behavior and processing load of the slow_wait stage is the same as the wait_for_signal stage. If synchronization is achieved, the receiver speed is recorded and the algorithm proceeds to the Negotiate_master stage. If the wake timer expires, the algorithm returns to the low processing load mode of operation.

Rx_LOS, if implemented (see dashed lines in figure 58), may be used in addition to periodically monitoring for receiver synchronization. If this option is implemented, Rx_LOS may be monitored by any means and at any time during the slow_wait stage. If Rx_LOS becomes false, the algorithm transitions to the Negotiate_master stage without recording a received speed. In some configurations, Rx_LOS negation may occur in the absence of an active attached device. This may cause spurious entry into Negotiate_master.

8.6.7 Timing requirements

8.6.7.1 Overview

This section describes the timing requirements for the speed negotiation algorithm.

The following are variables implemented to execute the algorithm:

a) t_{tx}: a timer that indicates the length of time since a transmitter has most recently been instructed to switch speeds. It is compared against t_txcycl to control duration of a transmitted speed;
b) t_{neg}: a timer that indicates the length of time since the most recent:
   A) successful Pass sync_test;
   B) entry into Negotiate_master;
   C) entry into Negotiate_follow; or
   D) entry into Wait_for_signal if the optional Slow_wait stage is implemented.
c) t_{neg} is compared against t_fail to timeout in case of Loss-of-Signal quality during negotiation; and

d) t_{sync}: a timer that indicates the length of time that a receiver maintains Word_sync at a single speed. T_{sync} is used to determine that the remote transmitter is stable and is not actively changing speeds.

The following are parameters that define part of the criteria for decision points in the algorithm:

a) transmitter Stabilization Time: The maximum time that it takes for a transmitter to achieve compliant transmission of the signal it uses for speed negotiation in a speed when administratively requested to change transmission to that speed. For any variant that does not specify a Transmitter Stabilization Time, including those specified in FC-PI-2, FC-PI-3, FC-PI-4, 10GFC, the Transmitter Stabilization Time shall be one millisecond. Other variants (e.g., those specified in FC-PI-5) may specify the Transmitter Stabilization Time to be greater than one millisecond. The Transmitter Stabilization time pertains only to the transmitter in the Host Electrical Transceiver. For optical module transmitter stabilization times see 8.6.7.2;

b) receiver Stabilization Time: The maximum time that it takes for a receiver to stabilize detection of the signal it uses for speed negotiation in a speed when administratively requested to change reception to that speed, or when the signal presented to the receiver changes from any other speed to the speed at which the receiver is operating. For any variant that does not specify a Receiver Stabilization Time, including those specified in FC-PI-2, FC-PI-3, FC-PI-4, 10GFC, the Receiver Stabilization Time shall be one millisecond. Other variants (e.g., those specified in FC-PI-5) may specify the Receiver Stabilization Time to be greater than one millisecond. The receiver stabilization time pertains only to the receiver in the Host Electrical Transceiver. For optical module receiver stabilization times see 8.6.7.2. For 64GFC variants, the sum of the receiver stabilization time and optical module receiver stabilization time (i.e., TmodulerxStabl) shall be less than or equal to the receiver cycle time (i.e., t_rxcycl) minus one millisecond;

c) receiver Cycle Time, t_rxcycl: The limits for the time the receiver is set to a particular speed during portions of the algorithm where the receiver is cycling speeds;

d) master_Transmitter Cycle Time, t_txcycl: The time threshold used to govern the transmission time of a particular speed in the Wait_for_signal, Negotiate_master, and Slow_wait stages;

e) speed stability time, t_stbl: Time threshold required to ensure stability of the speed received from the other Port;

f) watchdog timer threshold, t_fail: Time allowed for the algorithm to continue without passing the Pass sync_test at any supported speed;

g) low processing load sleep time, t_sleep: Threshold time for which the receiver may be cycled at the transmitter cycling rate in the Slow_wait stage. During this interval, attachment to a negotiating Port may not be detected, but attachment to a fixed speed Port is detected;

h) periodic sync search wake time, t_wake: Threshold time for normal cycling of receiver speeds in the Slow_wait stage required to allow synchronization if the upstream Port is executing speed negotiation;

i) speed recording time, t_ncycl: A threshold time that ensures that all possible speeds from another negotiating Port have been sampled by the receiver during the Negotiate_master stage;

j) speed recording time initial value, t_ncinit: a constant describing the initial value for t_{nc} when Pass sync_test has been achieved at a speed before entry to Negotiate_master stage;

k) timer test delay, t_wddly: Denotes the limits on the delay that shall be included in each cycle of the watchdog timer test (state 2B); and

l) slow_wait stage transmit cycle delay, t_txdly: Denotes the limits on the delay that shall be included in each cycle of the low processing overhead loop implemented by states 52-54.

Table 28 lists the range of values allowed for the specified timing parameter. Table 29 lists the value of timing parameters used only in comparison or as a value that is set, t_ncinit.

Table 28 - Timing parameters with a range

Timing Parameter	Min (ms)	Max (ms)
t_rxcycl	≥2 [a]	≤30
t_wddly	0	32
t_txdly	154	184

[a] t_rxcycl shall be no less than 2 ms and no less than the Receiver Stabilization Time plus one ms.

Table 29 - Constant timing parameters

Timing Parameter	Value (ms)
t_txcycl	154
t_stbl	217
t_ncycl	1 652
t_ncinit	370
t_fail	1 620
t_sleep	5 000
t_wake	900

8.6.7.2 Timing requirements for Optical Module for speed changes during LSN

This section defines values for the timing parameters as shown in figure 59.

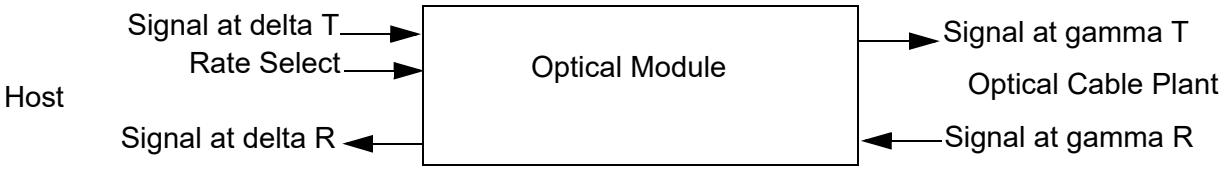

Figure 59 - Optical Module timing parameters

ThostUndef: Amount of time that the Host has to change the Rate Select and Signal at delta T to the optical module. The Rate Select and Signal at delta T may conflict during this time. The signal may be at an undetermined value during this time including all zero, all one or any other non-deterministic pattern.

TmoduletxStable: Time for optical module to stabilize Signal at gamma T after Rate Select and Signal at delta T are at their proper values.

TmodulerxStabl: Time for optical module to stabilize Signal at delta R once Rate Select and Signal at gamma R are at their proper values.

Optical module timing parameter values are specified in table 30.

Table 30 - Optical module timing parameter values

Timing Parameter	Value maximum (ms)
ThostUndef	1
TmoduletxStable	4
TmodulerxStabl	4

9 Transmitter training

9.1 Scope

Transmitter training is a function of the FC-2P sublevel.

9.2 Transmitter training

9.2.1 Overview

Transmitter training negotiates capabilities between the transmitters and receivers connected by a link:

a) values of transmitter equalizer coefficients that result in most reliable signal reception across the link;
b) values for receiver adaptive equalization circuits for reliable signal reception;
c) use of FEC;
d) Parallel Lane Support; and
e) Extended Marker Present.

This clause specifies the protocol by which these capabilities shall be negotiated.

Transmitter training includes two steps:

a) active training; and
b) link quality check.

9.2.2 Transmitter training for 128GFC/32GFC/16GFC

Active training is performed while transmitting and receiving the Transmitter Training Signal (see 5.6). Information in the Training Frame (see 5.6.2) portion of the Transmitter Training Signal is used to implement the protocol for negotiation of capabilities. The Training Pattern (see 5.6.3) portion of the Transmitter Training Signal allows each FC_Port to evaluate the received signal quality and recommend adjustments to the transmitter of the other FC_Port.

Training of transmitter equalizer coefficients is based on modeling the transmitter equalizer as having up to three coefficients that may be controlled by information in the Training Frame of the Transmitter Training Signal (see 5.6.2). The use of each coefficient is specified by FC-PI-x for each FC-0 variant that supports transmitter training. Each coefficient in the model has a minimum value, a maximum value, an initialize value, a preset value, and a step size by which it may be adjusted. These values are specified by FC-PI-x for each FC-0 physical variant that supports transmitter training.

An FC_Port that does not support training of transmitter equalizer coefficients acknowledges transmitter training commands but takes no action on its transmitter.

Training of transmitter equalizer coefficients presumes an adaptation process that determines the feedback requests to send to the remote transmitter and adjusts the local transmitter in response to feedback requests from the remote transmitter. The adaptation process observes the sequence of events specified by this standard, but the process by which it determines the need to send requests and adapts to received requests is not within the scope of this standard.

Link quality check confirms the ability of the link to be used for normal operation. Link quality check is performed while transmitting and receiving 64B/66B transmission code. Link quality check for frame transfer transmission codes other than 64B/66B is out of the scope of this standard.

9.2.3 Transmitter training state machines for 128/32/16GFC

9.2.3.1 Overview

Transmitter training shall cause link behavior equivalent to the state machines specified in 9.2.3.

Active training is specified by seven state machines operating concurrently:

a) Training_Sequencer;
b) a Cn_Controller for each coefficient n (i.e., n=-1, 0, 1) in the equalizer model; and
c) a Cn_Responder for each coefficient n (i.e., n=-1, 0, 1) in the equalizer model.

Link quality check is specified by a single state machine, Link_Qual_Check.

The transitions among these state machines and with the FC_Port state machine are specified by the transmitter training flow diagrammed in figure 60.

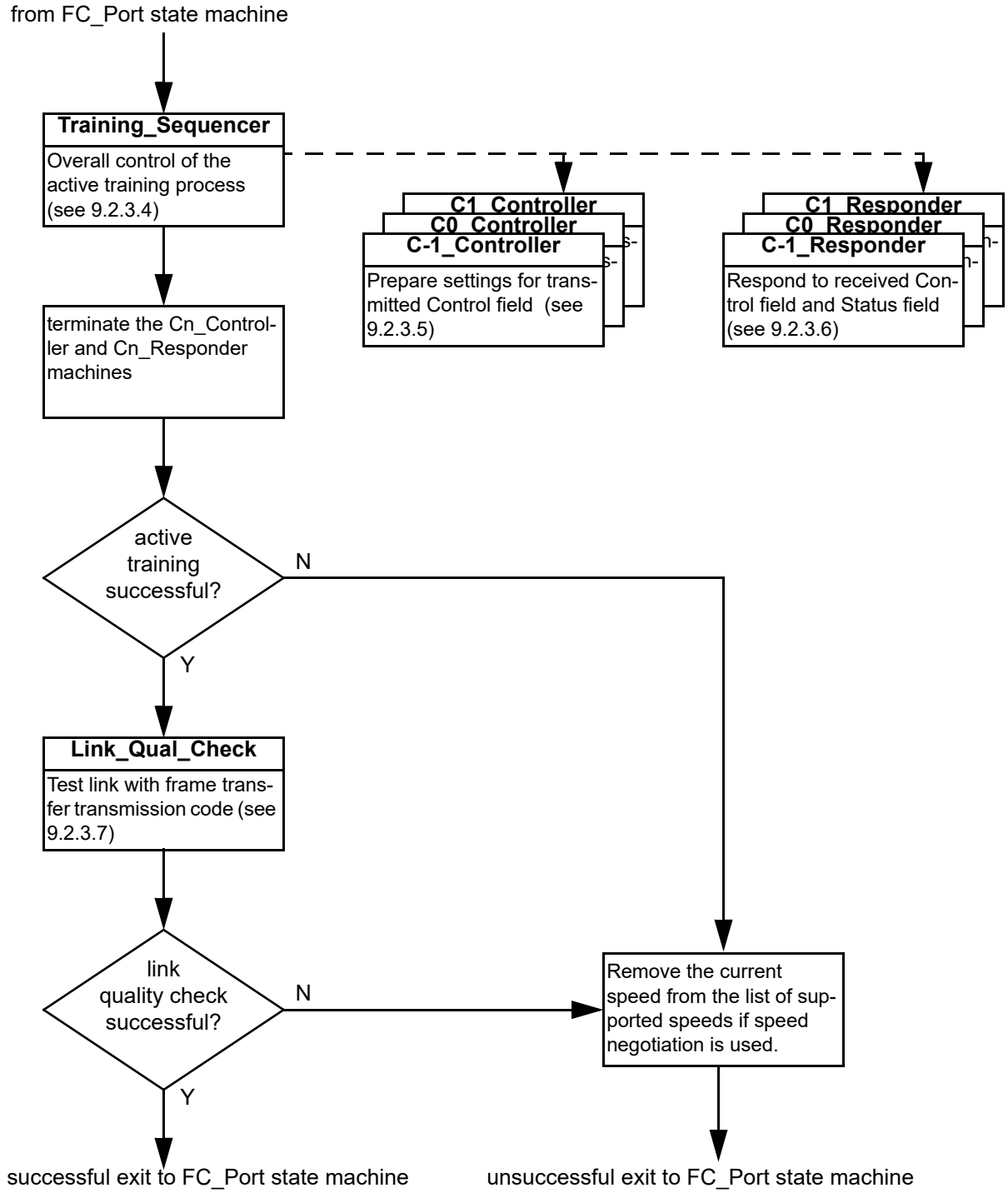

Figure 60 - Transmitter training flow

9.2.3.2 Timers

The timers specified in this subclause are visible to all state machines specified in 9.2.3.

train_fail_timer: a timer that limits the duration of active training. The train_fail_timer expires between 1 s and 1.5 s from the time it is started.

link_wait_timer: a timer that limits the duration in which the transmitter will transmit the Transmitter Training Signal at fixed settings after the remote FC_Port indicates training complete to ensure that remote FC_Port correctly detects the local interface state. The link_wait_timer expires between 32 μs and 96 μs from the time it is started.

link_test_timer: a timer that determines the delay in the LINK_TEST state before sampling of the link quality. The link_test_timer expires between 30 ms and 45 ms from the time it is started.

9.2.3.3 Variables

The variables specified in this subclause are visible to all state machines specified in 9.2.3.

These variables are set on decoding the values received in arriving Training Frames (see table 17 and table 18) during transmitter training. They are only set while the Transmitter Training Signal Transmission Word Synchronization state is Word Synchronization Acquired (see 6.5.1):

a) **rcv_Preset**: the value in the Preset field of the Control field in the most recently received Training Frame;
b) **rcv_Initialize**: the value in the Initialize field of the Control field in the most recently received Training Frame;
c) **rcv_FECReq**: the value in the FECReq field of the Control field in the most recently received Training Frame;
d) **rcv_C1Upd**: the value in the C1Upd field of the Control field in the most recently received Training Frame;
e) **rcv_C0Upd**: the value in the C0Upd field of the Control field in the most recently received Training Frame;
f) **rcv_C-1Upd**: the value in the C-1Upd field of the Control field in the most recently received Training Frame;
g) **rcv_TC**: the value in the TC field of the Status field in the most recently received Training Frame;
h) **rcv_SN**: the value in the SN field of the Status field in the most recently received Training Frame;
i) **rcv_FECCap**: the value in the FECCap field of the Status field in the most recently received Training Frame;
j) **rcv_TF**: the value in the TF field of the Status field in the most recently received Training Frame;
k) **rcv_C1Stat**: the value in the C1Stat field of the Status field in the most recently received Training Frame;
l) **rcv_C0Stat**: the value in the C0Stat field of the Status field in the most recently received Training Frame; and
m) **rcv_C-1Stat**: the value in the C-1Stat field of the Status field in the most recently received Training Frame.

The term rcv_CnUpd is used to reference some member of rcv_C-1Upd, rcv_C0Upd, or rcv_C1Upd, specified by the context of the reference. The term rcv_CnStat is used to reference some member of rcv_C-1Stat, rcv_C0Stat, or rcv_C1Stat, specified by the context of the reference.

These variables contain the values that are set in transmitted Training Frames (see table 17 and table 18) while the Transmitter Training Signal is being used during transmitter training:

a) **send_Preset**: the value to set in the Preset field of the Control field of subsequently sent Training Frames;
b) **send_Initialize**: the value to set in the Initialize field of the Control field of subsequently sent Training Frames;
c) **send_FECReq**: the value to set in the FECReq field of the Control field of subsequently sent Training Frames. The value of send_FECReq does not change;
d) **send_C1Upd**: the value to set in the C1Upd field of the Control field of subsequently sent Training Frames;
e) **send_C0Upd**: the value to set in the C0Upd field of the Control field of subsequently sent Training Frames;
f) **send_C-1Upd**: the value to set in the C-1Upd field of the Control field of subsequently sent Training Frames;
g) **send_TC**: the value to set in the TC field of the Status field of subsequently sent Training Frames;
h) **send_SN**: the value to set in the SN field of the Status field of subsequently sent Training Frames;
i) **send_FECCap**: the value to set in the FECCap field of the Status field of subsequently sent Training Frames. The value of send_FECCap does not change;
j) **send_TF**: the value to set in the TF field of the Status field of subsequently sent Training Frames. The value of send_TF does not change;
k) **send_C1Stat**: the value to set in the C1Stat field of the Status field of subsequently sent Training Frames;
l) **send_C0Stat**: the value to set in the C0Stat field of the Status field of subsequently sent Training Frames; and
m) **send_C-1Stat**: the value to set in the C-1Stat field of the Status field of subsequently sent Training Frames.

The term send_CnUpd is used to reference some member of send_C-1Upd, send_C0Upd, or send_C1Upd, specified by the context of the reference. The term send_CnStat is used to reference some member of send_C-1Stat, send_C0Stat, or send_C1Stat, specified by the context of the reference.

9.2.3.4 Training_Sequencer state machine

9.2.3.4.1 Overview

This state machine starts the concurrent state machines that manage training of individual equalizer coefficients (see 9.2.3.5 and 9.2.3.6), and then conducts the protocol to determine when training has become stable or failed. A diagram for the Training_Sequencer state machine is given in figure 61.

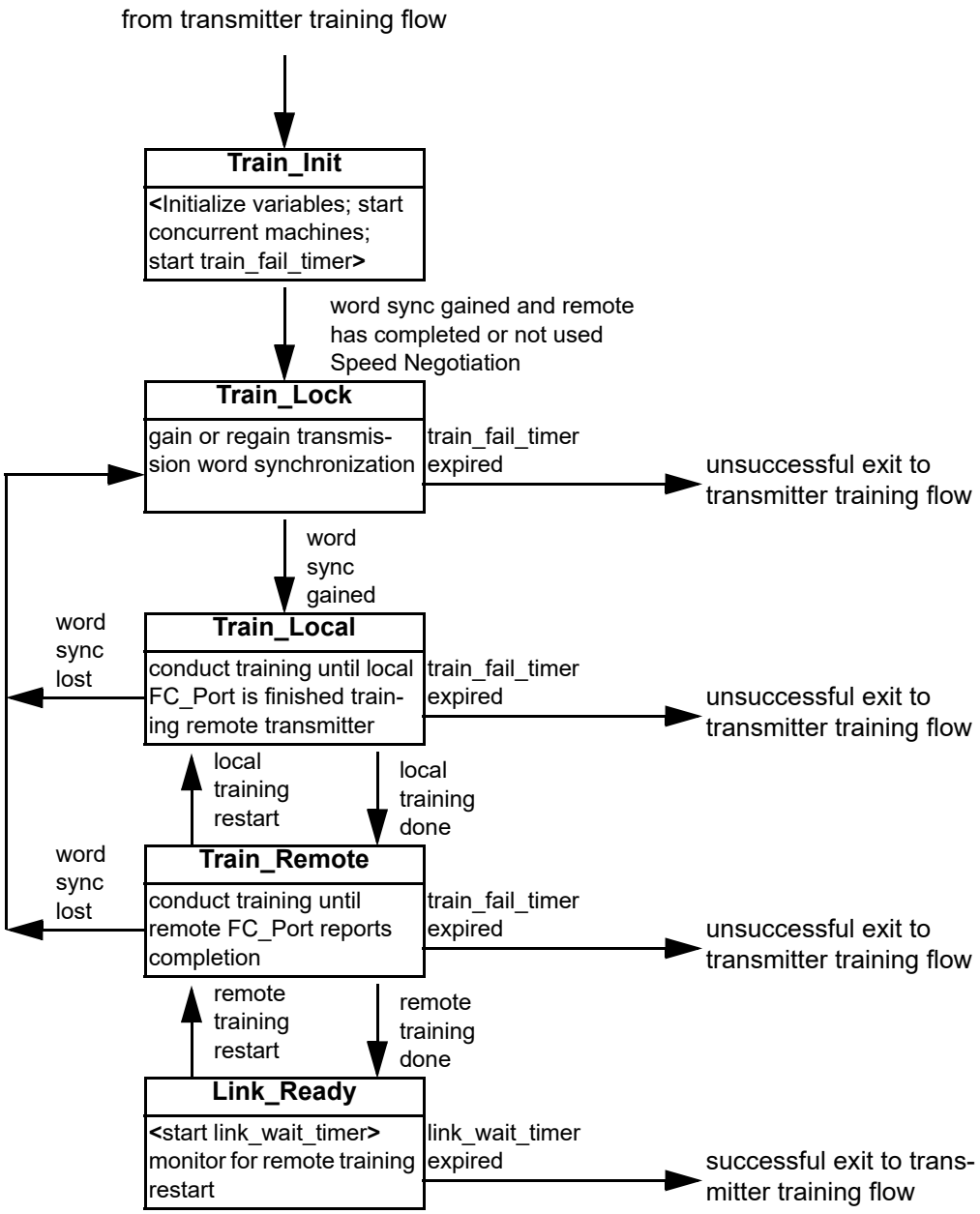

Figure 61 - Diagram of Training_Sequencer state machine flow

9.2.3.4.2 States

9.2.3.4.2.1 Train_Init

The Train_Init state initializes the variables and watchdog timer used by the state machine that specifies the process of actively negotiating transmitter capabilities, and then awaits the remote FC_Port indicating readiness for negotiation.

The actions on entry to the Train_Init state are:

1) initialize the variables (see 9.2.3.3) necessary for the operation of the remaining state machines:
   a) set rcv_Preset to zero;
   b) set rcv_Initialize to zero;
   c) set rcv_FECReq to zero;
   d) set all rcv_CnUpd to 00b;
   e) set rcv_TC to zero;
   f) set rcv_SN to one;
   g) set rcv_FECCap to zero;
   h) set rcv_TF to one;
   i) set all rcv_CnStat to 00b;
   j) set send_Preset to zero;
   k) set send_Initialize to zero;
   l) if the port does not request use of FEC, then set send_FECReq to zero;
   m) if the port requests use of FEC, then set send_FECReq to one;
   n) set all send_CnUpd to 00b;
   o) set send_TC to zero;
   p) set send_SN to zero;
   q) if the port does not support use of FEC, then set send_FECCap to zero;
   r) if the port supports use of FEC, then set send_FECCap to one; and
   s) if the FC_Port allows training of transmitter coefficients, then set send_TF to zero;
   t) if the FC_Port does not allow training of transmitter coefficients, then set send_TF to one;
   u) set all send_CnStat to 00b;
   v) for 32GFC and 128GFC set Extended Marker (see table 17) to 11b, other speeds set to 00b; and
   w) for training the Parallel Lane Support (see table 17) field is not meaningful;
2) set all of the transmitter equalizer coefficients to their initialize values (see FC-PI-x);
3) begin or continue transmitting the Transmitter Training Signal (see 5.6);
4) if the FC_Port supports training of transmitter coefficients, then start the Cn_Controller state machines (see 9.2.3.5);
5) start the Cn_Responder state machines (see 9.2.3.6); and
6) start the train_fail_timer (see 9.2.3.2).

The actions while remaining in the Train_Init state are:

a) transmit and receive the Transmitter Training Signal (see 5.6);
b) monitor rcv_SN; and
c) monitor the train_fail_timer.

The transitions from the Train_Init state are:

a) if the value of rcv_SN is zero, then transition to the Train_Lock state; or
b) if the train_fail_timer expires, then exit from the Training Sequencer state machine indicating active training is unsuccessful.

9.2.3.4.2.2 Train_Lock

The Train_Lock state establishes or recovers Transmitter Training Signal Transmission Word Synchronization (see 6.5) during the process of actively negotiating transmitter equalization.

There are no actions on entry to the Train_Lock state.

The actions while remaining in the Train_Lock state are:

a) transmit the Transmitter Training Signal;
b) monitor Transmitter Training Signal Transmission Word Synchronization (see 6.5); and
c) monitor the train_fail_timer.

The transitions from the Train_Lock state are:

a) if Transmitter Training Signal Transmission Word Synchronization is detected, then transition to the Train_Local state; or
b) if the train_fail_timer expires, then exit from the Training Sequencer state machine indicating active training is unsuccessful.

9.2.3.4.2.3 Train_Local

The Train_Local state establishes or re-establishes stable equalization of the remote transmitter by the local FC_Port during the process of actively negotiating transmitter capabilities.

The actions on entry to the Train_Local state are:

a) set send_TC to zero.

The actions while remaining in the Train_Local state are:

a) if the value of send_TF is zero, then monitor for completion of the adaptation process in the local FC_Port, which is not within the scope of this standard;
b) monitor Transmitter Training Signal Transmission Word Synchronization (see 6.5); and
c) monitor the train_fail_timer.

The transitions from the Train_Local state are:

a) if completion of the adaptation process in the local FC_Port is detected, then transition to the Train_Remote state;
b) if the value of send_TF is one, then transition to the Train_Remote state;
c) if the value of rcv_TF is one, then transition to the Train_Remote state;
d) if loss of Transmitter Training Signal Transmission Word Synchronization is detected, then transition to the Train_Lock state; or
e) if the train_fail_timer expires, then exit from the Training Sequencer state machine indicating active training is unsuccessful.

9.2.3.4.2.4 Train_Remote

The Train_Remote state establishes stable equalization of the local transmitter by the remote FC_Port during the process of actively negotiating transmitter capabilities.

The actions on entry to the Train_Remote state are:

a) set send_TC to one.

The actions while remaining in the Train_Remote state are:

a) monitor the value of rcv_TC;
b) monitor the value of rcv_TF;
c) if the value of send_TF is zero and rcv_TF is set to zero, then monitor for resumption of the adaptation process in the local FC_Port, which is not within the scope of this standard;
d) monitor Transmitter Training Signal Transmission Word Synchronization (see 6.5); and
e) monitor the train_fail_timer.

The transitions from the Train_Remote state are:

a) if the value of rcv_TC is one, then transition to the Link_Ready state;
b) if the value of send_TF is zero and the value of rcv_TF is zero and resumption of the adaptation process in the local FC_Port is detected, then transition to the Train_Local state;
c) if loss of Transmitter Training Signal Transmission Word Synchronization is detected, then transition to the Train_Lock state; or
d) if the train_fail_timer expires, then exit from the Training Sequencer state machine indicating active training is unsuccessful.

9.2.3.4.2.5 Link_Ready

The Link_Ready state confirms stable negotiation between the local and remote FC_Ports during the process of actively negotiating transmitter equalization.

The actions on entry to the Link_Ready state are:

a) start the link_wait_timer.

The actions while remaining in the Link_Ready state are:

a) monitor the value of rcv_TC; and
b) monitor the link_wait_timer.

The transitions from the Link_Ready state are:

a) if the value of rcv_TC is zero, then transition to the Train_Remote state; or
b) if the link_wait_timer expires, then exit from the Training Sequencer state machine indicating active training is successful.

9.2.3.5 Cn_Controller state machines

9.2.3.5.1 Overview

If the FC_Port supports training of transmitter coefficients, then there is an instance of the Cn_Controller state machine specific to each of the coefficients of the model transmitter equalizer (i.e., C1_Controller, C0_Controller and C-1_Controller). Each Cn_Controller controls the setting of its specific send_CnUpd variable, and acts on the setting of its specific rcv_CnStat variable. CnController state machines are instantiated at the start of the Training_Sequencer state machine, and terminated when the Training_Sequencer state machine terminates. When a Cn_Controller state machine is instantiated, it enters the Tx_Ready state. A diagram for the Cn_Controller state machine is given in figure 62.

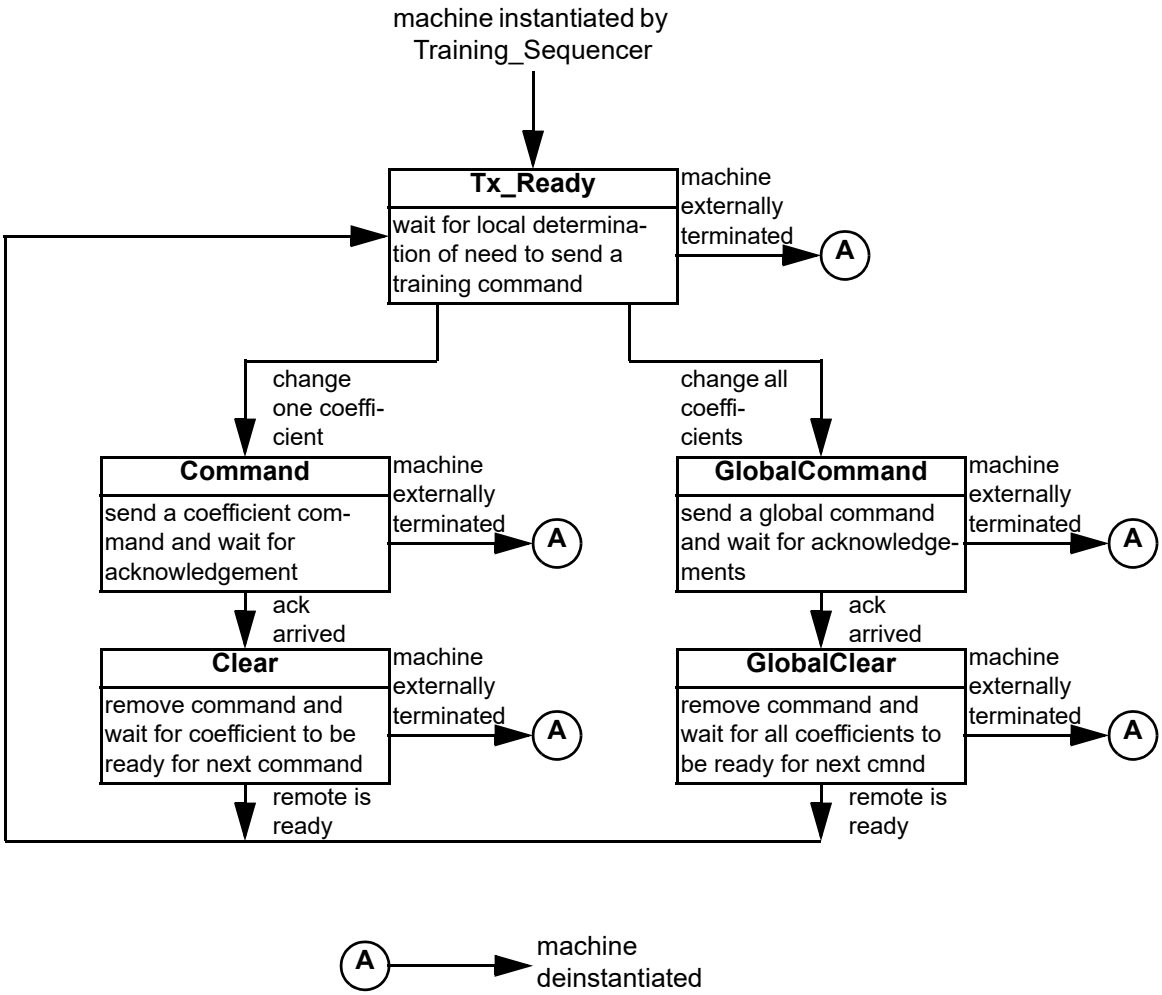

Figure 62 - Diagram of Cn_Controller state machine flow

9.2.3.5.2 States

9.2.3.5.2.1 Tx_Ready

In the Tx_Ready state, the Cn_Controller state machine has confirmed completion of its prior update command and does not need to update its coefficient further.

The actions on entry to the Tx_Ready state are:

a) set send_Preset to zero;
b) set send_Initialize to zero; and
c) set send_CnUpd to 00b for the coefficient managed by this Cn_Controller state machine.

The actions while remaining in the Tx_Ready state are:

a) monitor the value of rcv_TF. If the value of rcv_TF is zero, then:
   A) monitor for the need to set all coefficients to their initialize values (see FC-PI-x);
   B) monitor for the need to set all coefficients to their preset values (see FC-PI-x); and
   C) monitor for the need to increment or decrement the coefficient negotiated by this Cn_Controller state machine.

The processes by which a Cn_Controller determines the need to update the coefficient in the remote transmitter that it negotiates and reset the negotiation are not within the scope of this standard; however, these processes shall not indicate the need for more than one command at the same time that affects the same coefficient.

The transitions from the Tx_Ready state are:

a) if the value of rcv_TF is zero, the values of rcv_CnStat for all coefficients are 00b, and the Cn_Controller state machine determines the need to set all coefficients to their initialize values, then transition to the GlobalCommand state;
b) if the value of rcv_TF is zero, the values of rcv_CnStat for all coefficients are 00b, and the Cn_Controller state machine determines the need to set all coefficients to their preset values, then transition to the GlobalCommand state; or
c) If the value of rcv_TF is zero and the value of the rcv_CnStat for the coefficient to be adjusted is 00b, and the Cn_Controller state machine determines the need to increment or decrement the coefficient negotiated by this Cn_Controller state machine, then transition to the Command state.

9.2.3.5.2.2 Command

In the Command state, the Cn_Controller is sending a command that affects only its coefficient, and is waiting for acknowledgement that the command was received.

The actions on entry to the Command state are:

a) if the Cn_Controller state machine has determined the need to increment the coefficient negotiated by this Cn_Controller state machine, then set send_Preset to zero, set send_Initialize to zero, and set send_CnUpd to 01b for the coefficient negotiated by this Cn_Controller state machine; or
b) if the Cn_Controller state machine has determined the need to decrement the coefficient negotiated by this Cn_Controller state machine, then set send_Preset to zero, set send_Initialize

to zero, and set send_CnUpd to 10b for the coefficient negotiated by this Cn_Controller state machine.

The actions while remaining in the Command state are:

a) monitor the value of rcv_CnStat for the coefficient negotiated by this Cn_Controller state machine.

The transitions from the Command state are:

a) if the value of rcv_CnStat for the coefficient negotiated by this Cn_Controller state machine is not 00b, then transition to the Clear state.

9.2.3.5.2.3 Clear

In the Clear state, the Cn_Controller has received acknowledgement for a command that affects only its coefficient, and is waiting for notification that the remote FC_Port is ready for another command.

The actions on entry to the Clear state are:

a) set send_Preset to zero;
b) set send_Initialize to zero; and
c) set send_CnUpd to 00b for the coefficient managed by this Cn_Controller state machine.

The actions while remaining in the Clear state are:

a) monitor the value of rcv_CnStat for the coefficient negotiated by this Cn_Controller state machine.

The transitions from the Clear state are:

a) if the value of rcv_CnStat for the coefficient negotiated by this Cn_Controller state machine is 00b, then transition to the Tx_Ready state.

9.2.3.5.2.4 GlobalCommand

In the GlobalCommand state, the Cn_Controller is sending a command that affects all coefficients, and is waiting for acknowledgement that the command was received.

The processes by which a Cn_Controller determines the need to update the coefficient in the remote transmitter that it negotiates and reset the negotiation are not within the scope of this standard; however, these processes shall not indicate the need for more than one command at the same time that affects the same coefficient.

The actions on entry to the GlobalCommand state are:

a) if the Cn_Controller state machine determines the need to reset all coefficients to their preset values, then set send_Preset to one, set send_Initialize to zero, and set send_CnUpd to 00b for all coefficients; or
b) if the Cn_Controller state machine has determined the need to set all coefficients to their initialize values, then set send_Preset to zero, set send_Initialize to one, and send_CnUpd to 00b for all coefficients.

The actions while remaining in the GlobalCommand state are:

a) monitor the values of rcv_CnStat for all coefficients.

The transitions from the GlobalCommand state are:

a) if the values of rcv_CnStat for all coefficients are nonzero, then transition to the GlobalClear state.

9.2.3.5.2.5 GlobalClear

In the GlobalClear state, the Cn_Controller has received acknowledgement for a command that affects all coefficients, and is waiting for notification that the remote FC_Port is ready for another command.

The actions on entry to the GlobalClear state are:

a) set send_Reset to zero;
b) set send_Initialize to zero; and
c) set send_CnUpd to 00b for all coefficients.

The actions while remaining in the GlobalClear state are:

a) monitor the values of rcv_CnStat for all coefficients.

The transitions from the GlobalClear state are:

a) if the values of rcv_CnStat for all coefficients are 00b, then transition to the Tx_Ready state.

9.2.3.6 Cn_Responder state machines

9.2.3.6.1 Overview

There is an instance of the Cn_Responder state machine specific to each of the coefficients of the model transmitter equalizer (i.e., C1_Responder, C0_Responder and C-1_Responder). Each Cn_Responder acts on the setting of its specific rcv_CnUpd variable, and controls the setting of its specific send_CnStat variable. Cn_Responder state machines are instantiated at the start of the Training_Sequencer state machine, and terminated when the Training_Sequencer state machine terminates. When a Cn_Responder state machine is instantiated, it enters the Rx_Ready state. A diagram for the Cn_Responder state machine is given in figure 63.

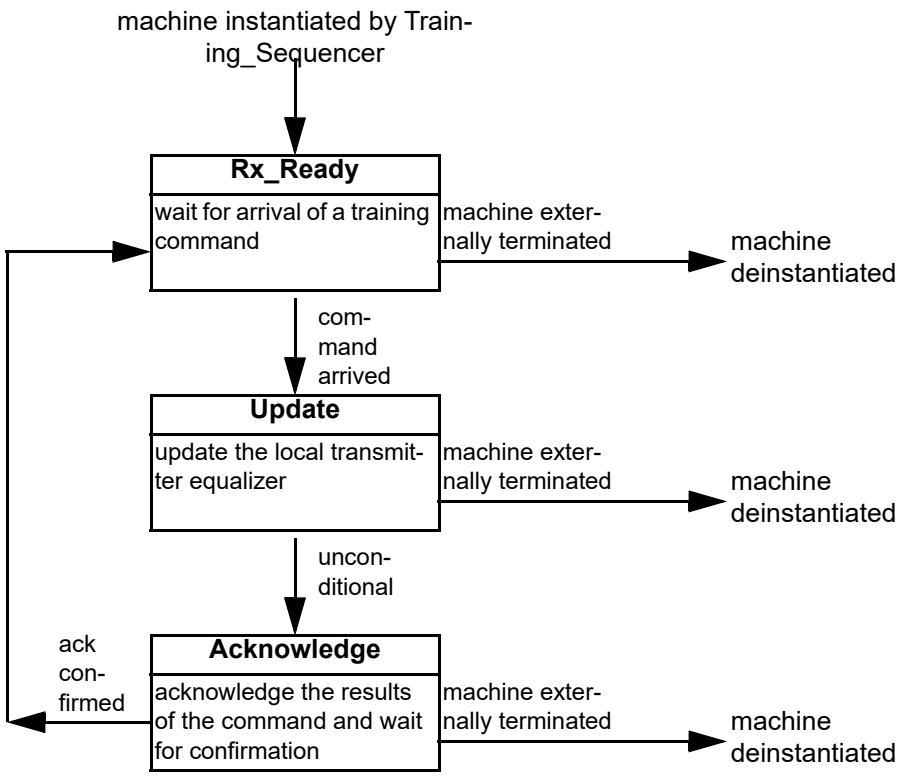

Figure 63 - Diagram of Cn_Responder state machine flow

9.2.3.6.2 States

9.2.3.6.2.1 Rx_Ready

In the Rx_Ready state, the Cn_Responder state machine is ready to process another request to change the transmitter equalizer coefficient managed by this Cn_Responder state machine.

The actions on entry to the Rx_Ready state are:

a) set send_CnStat to 00b for the coefficient managed by this Cn_Responder state machine.

The actions while remaining in the Rx_Ready state are:

a) monitor the value of rcv_CnUpd for the coefficient managed by this Cn_Responder state machine;
b) monitor the value of rcv_Initialize; and
c) monitor the value of rcv_Preset.

The transitions from the Rx_Ready state are:

a) if the value of rcv_CnUpd is nonzero for the coefficient managed by this Cn_Responder state machine, then transition to the Update state;
b) if the value of rcv_Initialize is nonzero, then transition to the Update state; and
c) if the value of rcv_Preset is nonzero, then transition to the Update state.

9.2.3.6.2.2 Update

In the Update state, the Cn_Responder state machine processes a command that affects the coefficient managed by this Cn_Responder state machine and reports the resulting status to the sender of the command.

The actions on entry to the Update state are:

a) if the value of send_TF is one, then set send_CnStat to any nonzero value for the coefficient managed by this Cn_Responder state machine;
b) if:
   A) the value of send_TF is zero; and
   B) the value of rcv_Preset is one,

   then set the coefficient managed by this Cn_Responder state machine to its preset value (see FC-PI-x) and then:
   A) if the coefficient managed by this Cn_Responder state machine is not at its minimum value and not at its maximum value, then set send_CnStat to 01b for the coefficient managed by this Cn_Responder state machine;
   B) if the coefficient managed by this Cn_Responder state machine is at its minimum value, then set send_CnStat to 10b for the coefficient managed by this Cn_Responder state machine; or
   C) if the coefficient managed by this Cn_Responder state machine is at its maximum value, then set send_CnStat to 11b for the coefficient managed by this Cn_Responder state machine;
c) if:
   A) the value of send_TF is zero;
   B) the value of rcv_Preset is zero; and
   C) the value of rcv_Initialize is one,

   then set the coefficient managed by this Cn_Responder state machine to its initialize value (see FC-PI-x) and set send_CnStat to 01b for the coefficient managed by this Cn_Responder state machine;
d) if
   A) the value of send_TF is zero;
   B) the value of rcv_Preset is zero;
   C) the value of rcv_Initialize is zero; and
   D) the value of rcv_CnUpd is 01b for the coefficient managed by this Cn_Responder state machine,

   then:
   A) if the coefficient managed by this Cn_Responder state machine is at its maximum value, then set send_CnStat to 11b for the coefficient managed by this Cn_Responder state machine; or
   B) if the coefficient managed by this Cn_Responder state machine is not at its maximum value then increment the coefficient managed by this Cn_Responder state machine by its step size (see FC-PI-x) and then:

a) if the coefficient managed by this Cn_Responder state machine is not at its maximum value, then set send_CnStat to 01b for the coefficient managed by this Cn_Responder state machine; or
b) if the coefficient managed by this Cn_Responder state machine is at its maximum value, then set send_CnStat to 11b for the coefficient managed by this Cn_Responder state machine;

or

e) if
   A) the value of send_TF is zero;
   B) the value of rcv_Preset is zero;
   C) the value of rcv_Initialize is zero; and
   D) the value of rcv_CnUpd is 10b for the coefficient managed by this Cn_Responder state machine,

   then:
   A) if the coefficient managed by this Cn_Responder state machine is at its minimum value, then set send_CnStat to 10b for the coefficient managed by this Cn_Responder state machine; or
   B) if the coefficient managed by this Cn_Responder state machine is not at its minimum value then decrement the coefficient managed by this Cn_Responder state machine by its step size (see FC-PI-x) and then:
      a) if the coefficient managed by this Cn_Responder state machine is not at its minimum value, then set send_CnStat to 01b for the coefficient managed by this Cn_Responder state machine; or
      b) if the coefficient managed by this Cn_Responder state machine is at its minimum value, then set send_CnStat to 10b for the coefficient managed by this Cn_Responder state machine.

There are no actions while remaining in the Update state.

The Update state transitions to the Acknowledge state on completing its actions on entry.

9.2.3.6.2.3 Acknowledge

In the Acknowledge state, the Cn_Responder maintains the status of its most recently processed command until the sender of the command indicates that the status has been received.

There are no actions on entry to the Acknowledge state.

The actions while remaining in the Acknowledge state are:

a) monitor the value of rcv_Preset;
b) monitor the value of rcv_Initialize; and
c) monitor the value of rcv_CnUpd for the coefficient managed by this Cn_Responder state machine.

The transitions from the Acknowledge state are:

a) If:
   A) the value of rcv_Preset is zero;
   B) the value of rcv_Initialize is zero; and

C) the value of rcv_CnUpd is zero for the coefficient managed by this Cn_Responder state machine,

then transition to the Rx_Ready state.

9.2.3.7 Link_Qual_Check state machine

9.2.3.7.1 Overview

This state machine verifies that the FC_Port is able to reliably communicate over the link using 64B/66B frame transfer transmission protocol (see 5.3). In this state machine, the NOS Primitive Sequence is transmitted.

9.2.3.7.2 States

9.2.3.7.2.1 Link_Test

The Link_Test state is the only state in the Link_Qual_Test state machine. It begins using the 64B/66B transmission code, delays long enough for both the local and remote FC_Port to synchronize to the 64B/66B transmission code, and then verifies 64B/66B Transmission Word Synchronization has been achieved.

The actions on entry to the Link_Test state are:

1) begin transmitting 64B/66B transmission code (see 5.3) with FEC determined by:
   A) if either send_FECCap or rcv_FECCap is set to zero, then do not use FEC;
   B) if neither send_FECReq nor rcv_FECReq is set to one, then do not use FEC; and
   C) if both send_FECCap and rcv_FECCap are set to one and either send_FECReq or rcv_FECReq is set to one, then use FEC;

   and
2) start the link_test_timer (see 9.2.3.2).

The actions while remaining in the Link_Test state are:

1) continue transmitting 64B/66B transmission code, with use of FEC as determined on entry to the Link_Test state, until the link_test_timer expires; and
2) Determine if Transmission Word Synchronization (see 6.4.1) is indicated.

The transitions from the Link_Test state are:

a) if Transmission Word Synchronization is indicated, then exit from the Link_Qual_Check state machine indicating that link quality check was successful; or
b) if Transmission Word Synchronization is not indicated, then exit from the Link_Qual_Check state machine indicating that link quality check was unsuccessful.

If the Link_Test state exits indicating that link quality check was successful, then the transmission code selected on entry to the Link_Test state continues to be used in normal operation.

9.2.4 Transmitter training for 256GFC/64GFC

9.2.4.1 Overview

Transmitter training for 64GFC is performed using the Transmitter Training Signal for 64GFC specified in 5.7. The following sections describe how the control and status field values are generated during Transmitter Training.

Initial condition setting is done as specified in IEEE 802.3cd D2.2 136.8.11.4.1.

Coefficient update is done as specified in IEEE 802.3cd D2.2 136.8.11.4.2.

Handshake timing is done as specified in IEEE 802.3cd D2.2 136.8.11.6.

Variables, functions, timers, counters and state diagrams are specified in IEEE 802.3cd D2.2 136.8.11.7 and the max_wait_timer value is specified in 9.3.

Active training is specified by the state machines specified in IEEE 802.3cd D2.2 136.8.11.7. Link quality check is specified by a single state machine, Link_Qual_Check.

The transitions among these state machines and with the FC_Port state machine are specified by the transmitter training flow diagrammed in figure 64.

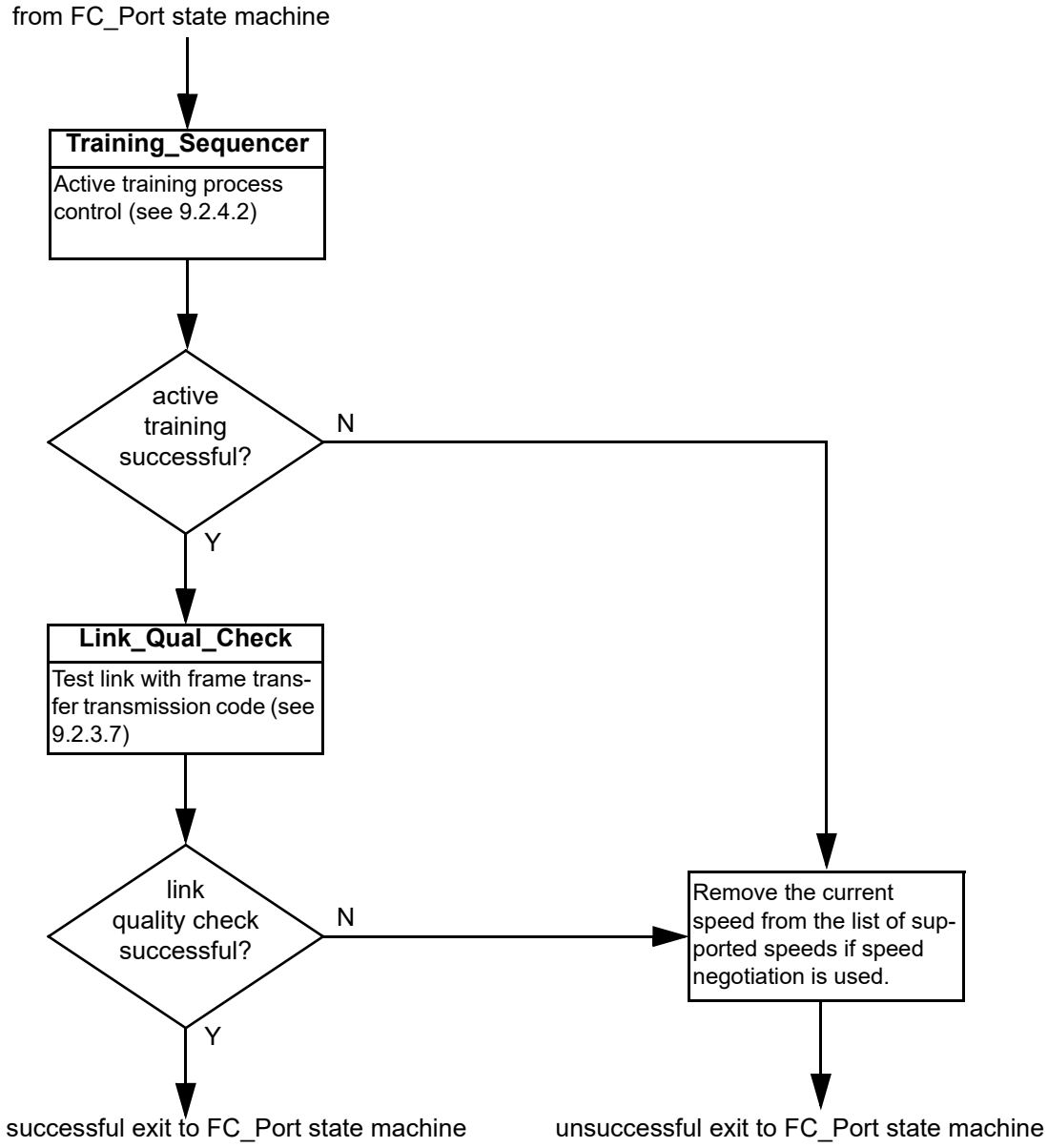

Figure 64 - 256G/64GFC transmitter training flow

9.2.4.2 256G-64GFC_Training_Sequencer state machine

This state machine is composed of the state diagrams illustrated in IEEE 802.3cd D2.2 136.8.11.7 Figure 136-7, Figure 136-8 and Figure 136-9.

9.3 Link Speed Negotiation/Transmitter Training flow diagram for 64GFC

An example of the flow as the link moves from LSN to Transmitter Training for 64GFC links is shown is Figure 65 .

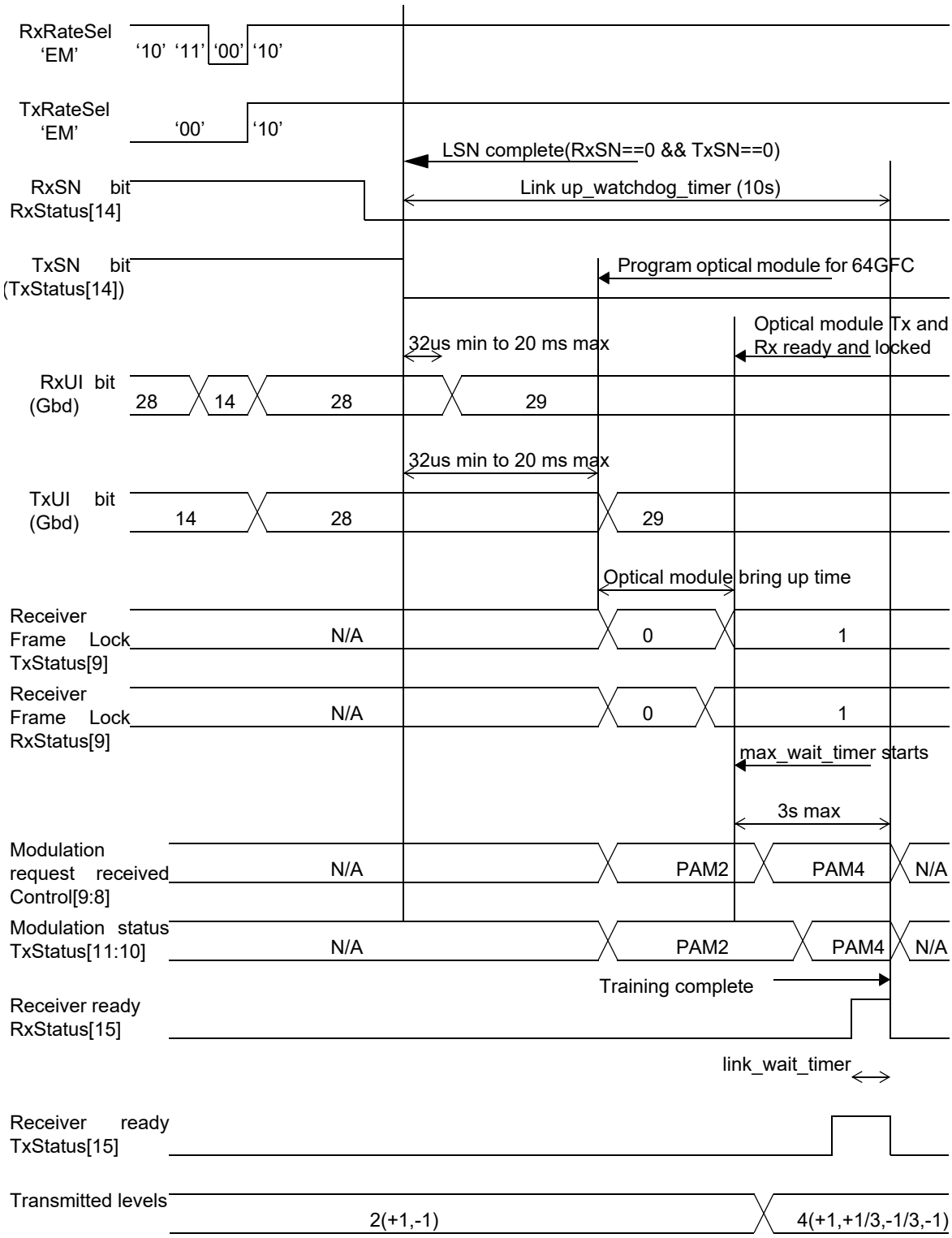

Figure 65 - Link speed negotiation to Transmitter Training for 64GFC links

During the LSN (Link Speed Negotiation) sequence, each transmitter sends a series of Transmitter Training Signal (TTS) frames for predefined time periods (t_txcycl) to advertise the speeds it supports. Each receiver concurrently samples the received TTS at the speeds it supports for predefined sub-intervals (t_rxcycl) of t_txcycl in an attempt to lock to the received TTS.

Simplified timing diagrams of the LSN sequence, along with associated timing parameters, are illustrated in figure 66 and figure 67. Once a common speed for both sides of the link is determined (e.g. both sides achieve frame lock and support the speed indicated by the Extended Marker field), each side sets its Training Frame Status bit 14 (i.e., SN) to zero which signals LSN sequence completion. For details of the LSN sequence see clause 8.

An example LSN Tx rate change timing diagram is shown in figure 66.

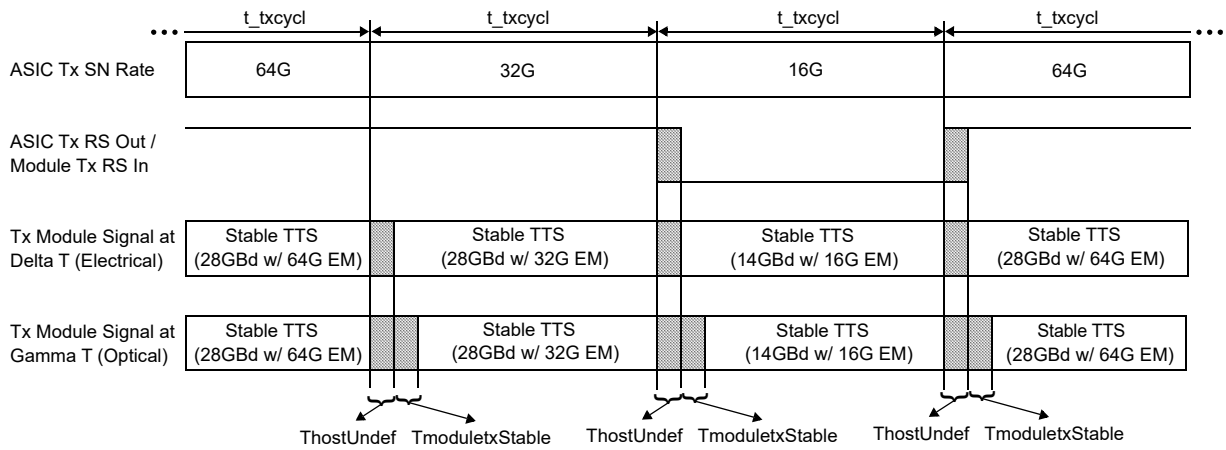

Figure 66 - Example LSN Tx rate change timing diagram

An example LSN Rx rate change timing diagram is shown in figure 67.

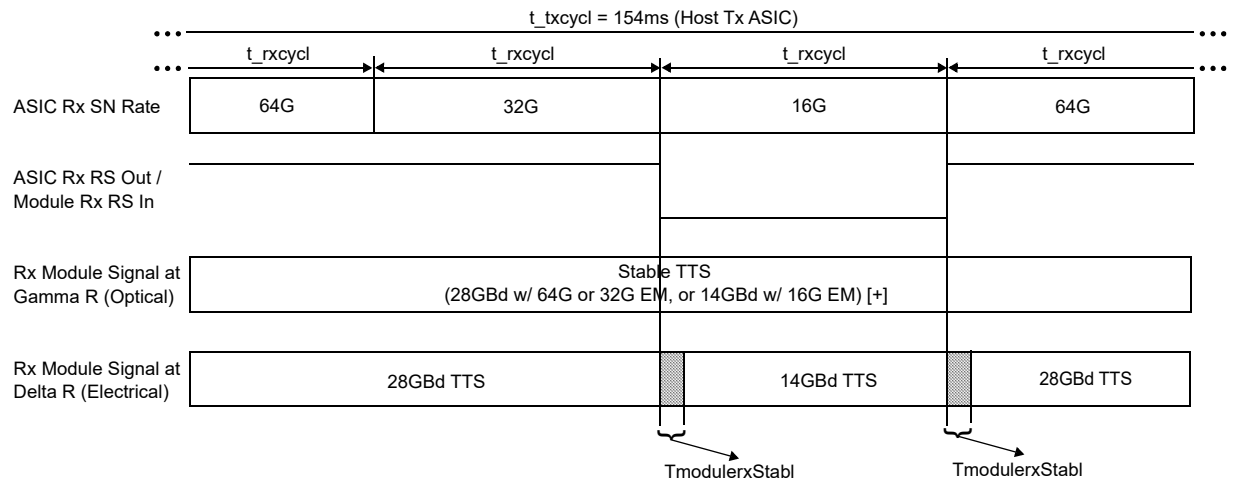

[+] Total time for Stable TTS signal at Gamma R (Optical) during a given Host Tx ASIC LSN speed cycle t_txcycl:
149ms (i.e. t_txcycl - MAX[ThostUndef + TmoduletxStable]) to 154ms (i.e. t_txcycl - MIN[ThostUndef + TmduletxStable])

Figure 67 - Example LSN Rx rate change timing diagram

The link shall transmit the TTS for LSN for a minimum of 32us (lsn_end_wait_timer) after LSN sequence completion.

The link must start transmitting the 28.9Gbaud TTS frame for 64GFC within a maximum time of 20ms (lsn_end_training_start_timer) from LSN sequence completion.

If the transmitter training is being run across an optical link, the optical module shall be programmed to run at the 64GFC data rate upon expiration of the lsn_end_training_start_timer. After completion of optical module programming, the link will wait for the optical module to indicate that it is ready to transmit and receive data at the 64GFC data rate by reading appropriate status bits in the optical module. Once the optical module indicates a ready status, the Host Electrical Transceiver shall acquire lock to the 64GFC TTS frame.

If the transmitter training is being run across an electrical link the steps related to optical module programming and checking for status shall not be executed. Instead the Host Electrical Transceiver shall attempt to acquire lock to the 64GFC TTS frame upon expiration of the lsn_end_training_start_timer.

Once lock is achieved to the 64GFC TTS frame in the Host Electrical Transceiver, the link shall set Training Frame Status Field Bit 9 (i.e., Receiver Frame Lock) to let the remote side know that it has achieved lock to the TTS signal. When it receives Training Frame Status Field Bit 9 (i.e., Receiver Frame Lock) from the remote side, this indicates that tuning of the link parameters can start, and the max_wait_timer shall be started. Transmitter Training starts with a PAM2 Training Pattern (see 5.7). It switches to PAM4 once tuning of parameters for PAM2 is complete.

When the link determines that tuning of link parameters is complete it shall set Training Frame Status Field Bit 15 (i.e., Receiver Ready) to one. When Training Frame Status Field Bit 15 in both the transmitted and received TTS is one, then Transmitter training is complete. The process from LSN complete to Transmitter Training complete must be completed before linkup_watchdog_timer expires.

The link will now enter the LINK_READY state (see IEEE 802.3cd D2.2 figure 136-7). From the Link Ready state, upon expiration of the link_wait_timer, the link will move to the Link Quality Check State Machine (see 9.2.3.7) to perform a Link test. FEC is mandatory for 64GFC links, so exchanged FEC capability bits are ignored while performing the Link test.

lsn_end_wait_timer: this timer is started after LSN sequence completion. The link sends additional TTS frames until this timer expires to ensure that the remote link partner receives a sufficient number of training frames to detect the link state. The minimum value of this timer shall be 32us.

lsn_end_training_start_timer: this timer is started after LSN sequence completion. The link starts switching its Host Electrical Transceiver to transmit the TTS frames (see 5.7) for 64GFC transmitter training after meeting the requirements specified in lsn_end_wait_timer and must complete this switch before lsn_end_training_start_timer expires. The maximum value of this timer shall be 20ms.

max_wait_timer: this timer sets the limit on how long transmitter training is allowed to operate to find the optimal transmit coefficients and receiver adaptive equalization values for reliable link operation. For 64GFC links, the value of the max_wait_timer shall be 3 seconds.

linkup_watchdog_timer: this timer is started upon LSN sequence completion. This timer sets the maximum amount of time from LSN complete to transmitter training complete. The value of this timer shall be set to 10 seconds.

link_wait_timer: a timer that limits the duration in which the transmitter will transmit the Transmitter Training Signal at fixed settings after the remote FC_Port indicates training complete to ensure that remote FC_Port correctly detects the local interface state. The link_wait_timer expires between 32us and 96us from the time it is started.

10 Energy Efficient Fibre Channel

10.1 Overview

The Energy Efficient Fibre Channel capability provides a protocol and associated physical layer capabilities to allow a Fibre Channel link to operate at a lower power level. The goal of the Energy Efficient Fibre Channel is:

a) provide a protocol to allow transitions to and from a lower power level;
b) allow such transition to occur without changing the link status, dropping, or corrupting frames; and
c) provide a transition time that is small enough such that it is transparent to the upper level protocols (i.e., minimum impact on link bandwidth and latency).

Energy Efficient operation is negotiated per link using a login bit either in the FLOGI/PLOGI, for N_Ports, and F_Ports, or in the ELP for E_Ports (see FC-LS-4).

Energy Efficient operation is achieved by entering the Low Power Idle (LPI) mode (see 10.6). During Low Power Idle mode, the link is still active, but enters periods of lower power level operation. When one of the link partners has data to transmit, a wake-up signal is sent to indicate that the link should return to a full power operation.

Energy Efficient operation is not supported on NL_Ports.

10.2 Energy Efficient Negotiation

If supported, Energy Efficient operation shall be negotiated during login according to the following:

a) For N_Ports operating without a fabric, Word 2, Bits 24 and 25 of the Common Service Parameters in the PLOGI and PLOGI LS_ACC shall be set to indicate Energy Efficient operation support (see FC-LS-4);
b) For N_Ports connecting to a fabric, Word 2, Bits 24 and 25 of the Common Service Parameters in the FLOGI and FLOGI LS_ACC shall set to indicate Energy Efficient operation support (see FC-LS-4). For N_Ports connected to a fabric, the Energy Efficient operation bit in any subsequent PLOGI or PLOGI LS_ACC shall be ignored; and
c) For E_Ports bits 10 and 11 in the Flags field of the ELP shall be set to indicate Energy Efficient operation support (see FC-SW-6).

In order for any particular link to support Energy Efficient operation both N_Ports or E_Ports of the link shall indicate support for Energy Efficient operation.

10.3 Energy Efficient Fibre Channel and FEC

For 16GFC FC_Ports which support FEC (see 5.3.1), a port implementing Energy Efficient Fibre Channel shall implement the FEC rapid block synchronization as defined in clause 74 of IEEE 802.3-2015. The Fibre Channel FEC block scrambled with PN-2112 sequence for the wake state in Energy Efficient Fibre Channel, which uses Idle, and refresh state in FC-EE, which uses LPI, are identical to Annex 74A.5 and Annex 74A.6 of IEEE 802.3-2015, respectively.

For 32GFC FC_Ports, a port implementing Energy Efficient Fibre Channel shall implement FEC rapid block synchronization. Table K.11 provides the data stream at the output of the Reed-Solomon encoder after the data is scrambled with the PN-5280 sequence as described in 5.4.4 when IDLE is sent. The example shows the stream of data in 257-bit format (20 257b symbols plus 140b parity) generated from the output of the Reed-Solomon encoder after the PN-5280 scrambler. Table K.12 provides the data stream at the output of the Reed-Solomon encoder after the data is scrambled with the PN-5280 sequence as described in 5.4.4 when LPI is sent. The example shows the stream of data in 257-bit format (20 257b symbols plus 140b parity) generated from the output of the Reed-Solomon encoder after the PN-5280 scrambler.

10.4 Alert Signal

The Alert Signal shall be sent to indicate wake up from quiet mode. The Alert Signal shall be a repeating FF00h pattern.

NOTE 15 - The ALERT signal is generated to trigger energy_detect.

10.5 Transmitter Turn Off

During the quiet cycle, some transceiver types may not be capable of turning off the transmitter/receiver. In this case, LPI shall be transmitted during LPI Mode in order to indicate low power operation. This allows the port to turn off unused capabilities to save power. For ports not capable of turning off their local transmitter, and/or whose receiver is not capable of supporting a remote transmitter which is turned off, the lpi_fw variable shall be set to TRUE at both sides of the port.

10.6 LPI Mode

10.6.1 Overview

Energy Efficient operation is accomplished by entering LPI Mode. LPI Mode operation is indicated by a set of Primitive Signals:

a) The transmitter indicates a request for LPI Mode by transmitting LPI in place of Idle. The process by which this is accomplished depends on the link encoding (see 5).
b) The receiver is notified of the link partner request for entry into LPI Mode by receipt of a LPI in place of Idle.

While in LPI Mode, data traffic transmission is disabled if the transmitter/receiver pair supports it (see 10.5), and the link operates in a quiet/refresh cycle until one of the link partners indicates a change back to full power operation by sending a wake signal for a predetermined amount of time. This wake signal consists of sending Idle (i.e., not an LPI) across the link. One reason for a return to full power operation would be the presence of data to transmit.

Figure 68 shows an overview of LPI Mode operation. In LPI Mode, after the sleep time (i.e., T_s), the link cycles between a quiet time (i.e., T_q) and a wake cycle in order to refresh the link. The sleep time (i.e., T_s), Quiet time (i.e., T_q), refresh cycle, and wake time (i.e. T_w) are defined in 10.6.3.

10.6.2 LPI Mode Entry

An FC_Port shall enter and exit LPI Mode only from the Active State (see 7.4).

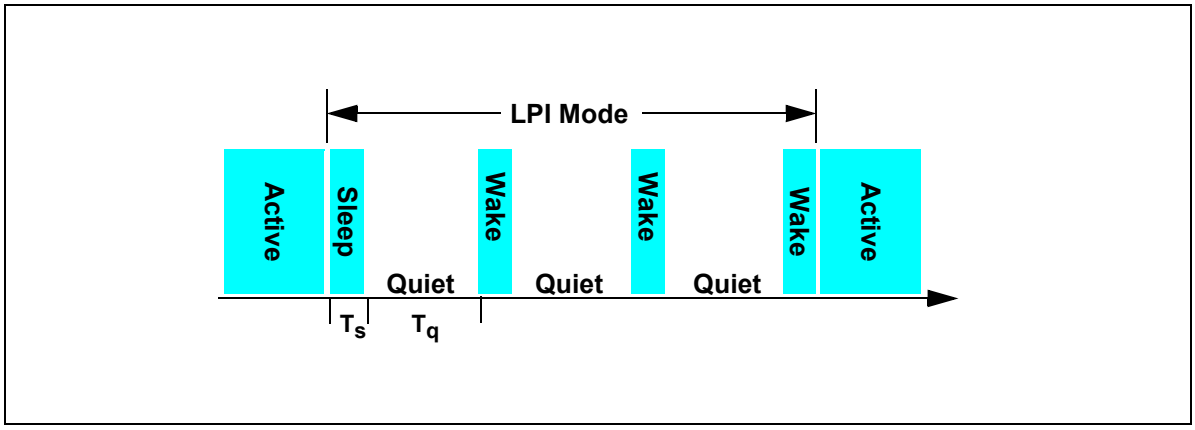

Figure 68 - Overview of LPI Mode operation

NOTE 16 - For 64B/66B encoding this means that the only valid code transitions for LPI are Idle to LPI, LPI to Idle, and EOF to LPI (see 5.3.6).

10.6.3 LPI Mode Timing Parameters

For LPI Mode operation, the Transmitter State Diagram timing parameters shall be as defined in table 31, and the Receiver State Diagram timing parameters shall be as defined in table 32.

Table 31 - Transmitter LPI Mode timing parameters

Parameter	Description	16GFC		32GFC		Units
		Min	Max	Min	Max	
Alert_Timer	Time spent in the Alert state	1.1	1.3	1.1	1.3	µs
Bypass_Timer	Time spent in the SCR Bypass state	0.9	1.1	0.9	1.1	µs
T_s	Sleep Time from entering the Sleep state to when tx_mode is set to QUIET	4.9	5.1	0.9	1.1	µs
T_q	Quiet Time from when tx_mode is set to QUIET to entry into the Alert state	1.7	1.8	1.7	1.8	ms
T_w	Time spent in the Wake state	9.5	9.7	3.9	4.1	µs

Table 32 - Receiver LPI Mode timing parameters

Parameter	Description	16GFC		32GFC		Units
		Min	Max	Min	Max	
T_q	The time the receiver waits for energy_detect to be set to TRUE while in the Quiet state before asserting receive fault	2	3	2	3	ms
T_w	Time the receiver waits in the Wake state before indicating a wake time fault. (when scr_bypass_enable = FALSE)	10.1		N/A[a]		µs
T_w	Time the receiver waits in the Wake state before indicating a wake time fault. (when scr_bypass_enable = TRUE)	12.3		5.7		µs
T_{wf}	Wake time fault recovery time	10		10		ms

[a] For 32GFC this timer has no meaning since FEC is required (i.e., scr_bypass_enable will never be FALSE).

10.6.4 Energy Efficient Fibre Channel State Diagrams

10.6.4.1 Energy Efficient State Variables

energy_detect: Set to TRUE if energy detected on port.

lpi_active: Set to TRUE if LPI is being transmitted on the link. FALSE if LPI is not being transmitted on the link.

lpi_fw: Set to TRUE if fast wake mode is enabled. Set to FALSE if fast wake mode is not enabled. See 10.5.

rx_coded: Current received symbol.

rx_mode: Set to DATA if data is being received on the link. Set to QUIET if data is not being received on the link.

rx_sync: Set to TRUE if the link has word synchronization. Set to FALSE if the link does not have word synchronization.

scr_bypass: Set to TRUE if scrambler bypass is active. Set to FALSE if scrambler bypass is not active. Scrambler bypass turns off 64B/66B scrambling only.

scr_bypass_enable: Indicates to the LPI Mode Transmitter state diagram that the scrambler bypass option is required. Set to TRUE if the LPI Mode Transmitter is required to bypass scrambling of 64B/66B transmission words. Set to FALSE if the LPI Mode Transmitter must not bypass 64B/66B scrambling.

tx_mode: Set to DATA if data is being transmitted on the link. Set to QUIET if data is not being transmitted on the link. Set to ALERT when the ALERT signal is being transmitted (see 10.4)

tx_raw: Current transmit symbol.

10.6.4.2 LPI Mode Transmitter State Diagram

Figure 69 shows the state diagram for the transmitter in LPI Mode.

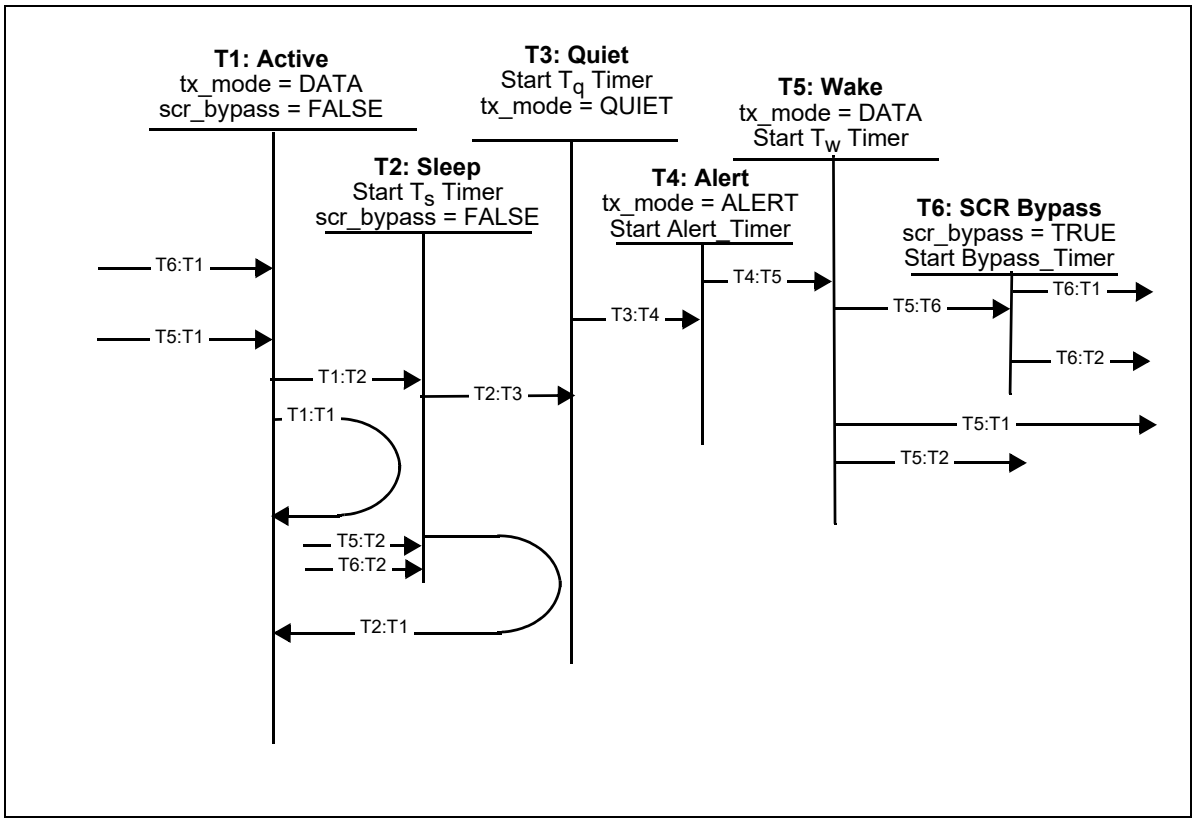

Figure 69 - LPI Mode transmitter state diagram

State T1 Active: This state is normal Fibre Channel operation. This state is entered upon entry into the Active state in the FC_Port state machine (see 7). The link is running at full power and data may be transmitted. tx_mode is set to DATA, and scr_bypass is set to FALSE.

Transition T1:T2: When lpi_fw is set to FALSE, the port transmits LPI in place of Idle to enter LPI Mode (i.e., .lpi_fw = FALSE * tx_raw = LPI).

Transition T1:T1: The port wishes to stay in Active mode, IDLE is transmitted, or LPI is transmitted when lpi_fw is set to TRUE (i.e., lpi_fw = TRUE + tx_raw ≠ LPI).

State T2 Sleep: The T_s timer is started.

Transition T2:T1: The port does not transmit LPI, indicating exit from LPI Mode (i.e., tx_raw ≠ LPI).

Transition T2:T3: The T_s timer has expired and LPI continues to be transmitted (i.e. tx_raw = LPI * T_s timer done).

State T3 Quiet: Local port has entered Quiet mode. The Transmitter is turned off. The tx_mode variable is set to QUIET. T_q timer is started.

Transition T3:T4: T_q timer has expired, or the port does not transmit LPI (i.e., T_q timer done + tx_raw ≠ LPI).

State T4 Alert: Set tx_mode to ALERT and send Alert Signal (see 10.4) until Alert_Timer expires.

Transition T4:T5: The Alert_Timer has expired.

State T5 Wake: Set tx_mode to DATA and start T_w timer.

Transition T5:T6: T_w timer has expired and scr_bypass_enable is TRUE (i.e., disable 64B/66B scrambling) (i.e., T_w timer done * scr_bypass_enable = TRUE).

Transition T5:T1: T_w timer has expired and the port does not transmit LPI and scr_bypass_enable is FALSE indicating an exit from LPI Mode (i.e., tx_raw ≠ LPI * T_w timer done * scr_bypass_enable = FALSE). LPI is not transmitted to indicate to remote port that it should exit LPI Mode.

Transition T5:T2: T_w timer has expired and the port transmits LPI and scr_bypass_enable is FALSE indicating that the port stays in LPI Mode. Return to Sleep mode (i.e., tx_raw = LPI * T_w timer done * scr_bypass_enable = FALSE).

State T6 SCR Bypass: Disable 64B/66B scrambling for time defined by Bypass_Timer. Start Bypass_Timer.

Transition T6:T2: The Bypass_Timer timer has expired, and the port transmits LPI, then re-enable 64B/66B scrambling (i.e., tx_raw = LPI * Bypass_Timer done).

Transition T6:T1: The Bypass_Timer timer has expired and the port does not transmit LPI indicating an exit from LPI Mode. LPI is not transmitted to indicate to remote port that it should exit LPI Mode (i.e., tx_raw ≠ LPI * Bypass_Timer done).

10.6.4.3 LPI Mode Receiver State Diagram

Figure 70 shows the state diagram for the receiver in LPI Mode.

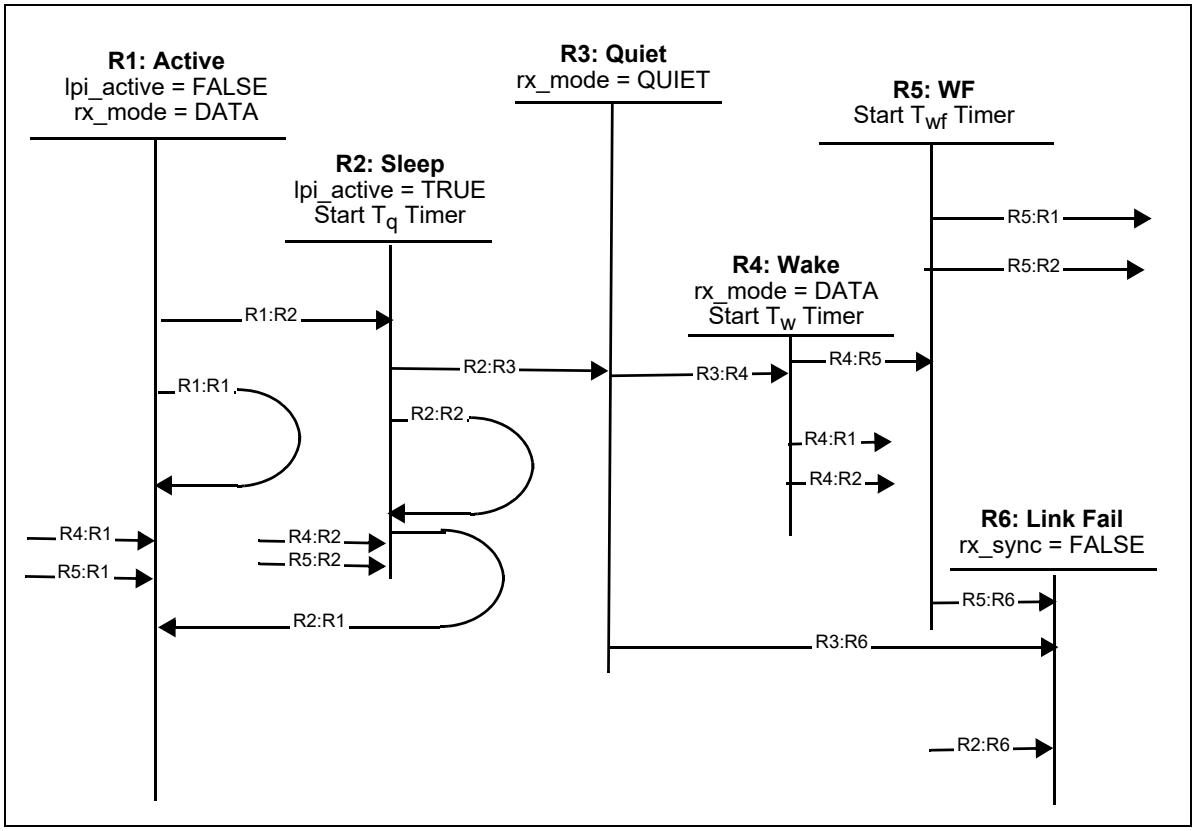

Figure 70 - LPI Mode receiver state diagram

State R1 Full Active: This state is normal Fibre Channel operation. This state is entered upon entry into the Active state in the FC_Port state machine (see 7). The link is running at full power and data may be received. The variables lpi_active is set to FALSE, and rx_mode is set to DATA.

Transition R1:R1: If rx_sync is not equal to TRUE return to R1 (i.e., rx_sync ≠ TRUE).

Transition R1:R2: The local port receives LPI and rx_sync is TRUE (i.e., rx_sync = TRUE * rx_coded = LPI).

State R2 Sleep: The local port has received LPI indicating that the remote port wishes to enter LPI Mode. Set lpi_active to TRUE. Start T_q timer.

Transition R2:R2: If rx_sync is TRUE, and received LPI (i.e., rx_sync = TRUE * rx_coded = LPI).

Transition R2:R1: if rx_sync is TRUE, and received IDLE (i.e., rx_sync = TRUE * rx_coded = IDLE).

Transition R2:R3: When rx_sync is FALSE (i.e., rx_sync = FALSE).

State R3 Quiet: Local port has entered Quiet mode. Remote transmitter has been turned off. Rx_mode is set to QUIET.

Transition R3:R4: Energy detect on link (energy_detect = TRUE).

Transition R3:R6: Energy not detected, and T_q timer has expired (energy_detect = FALSE * T_q timer done).

State R4 Wake: Remote transmitter is turned back on. Rx_mode is set to Data, Tw timer is started.

Transition R4:R1: T_w timer has not expired and rx_sync is TRUE and IDLE received (i.e., T_w timer not done * rx_sync = TRUE * rx_coded = IDLE).

Transition R4:R2: T_w timer has not expired and rx_sync is TRUE and LPI received (i.e., T_w timer not done * rx_sync = TRUE * rx_coded = LPI).

Transition R4:R5: T_w timer has expired.

State R5 WF: Start T_{wf} timer.

Transition R5:R1: T_{wf} timer has not expired and rx_sync is TRUE and LPI is not received (i.e., Twf timer not done * rx_sync = TRUE = rx_coded ≠ LPI).

Transition R5:R2: T_{wf} timer has not expired and rx_sync is TRUE and LPI received (i.e., Twf timer not done * rx_sync = TRUE * rx_coded = LPI).

Transition R5:R6: T_{wf} time has expired.

State R6 Link Fail: Port is in Link Failure and shall enter the link initialization state machine (see 7).

11 Frame Transmission and Reception

11.1 Scope

The frame content is a function of the FC-2V sublevel and the FC-2M sublevel, and is common to all Fibre Channel implementations. Representation of the delimiters is a function of the FC-2P sublevel. FC-2P sublevels other than that specified in this standard may not use the Ordered Sets specified by this standard.

11.2 General frame format

All FC-2 frames shall follow the frame format as shown in figure 71. An FC-2 frame is composed of a SOF delimiter, frame content, and an EOF delimiter. The frame content is composed of 0 or more Extended_Headers, a Frame_Header, Data_Field, and CRC. Unless otherwise specified, the term frame refers to a FC-2 frame in this standard.

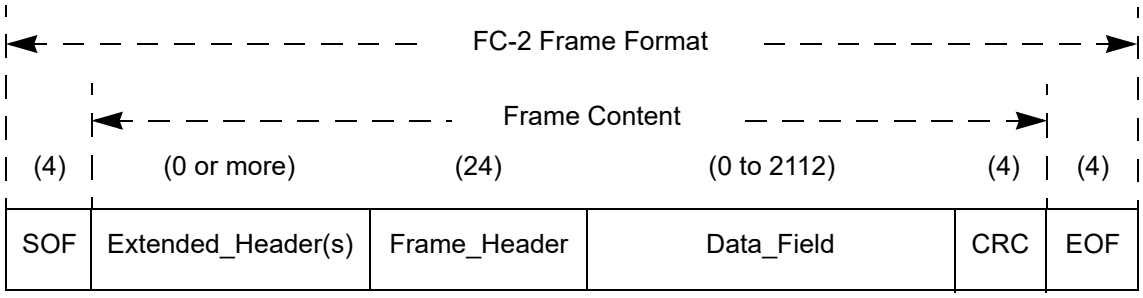

Figure 71 - FC-2 frame format

11.3 Frame transmission and reception

11.3.1 Overview

Frame transmission and reception are functions of the FC-2P sublevel.

11.3.2 Fill Words

Fill Words are Special Functions that shall be transmitted when no frames or other Special Functions (i.e., not Fill Words) are being transmitted. Fill Words may be added to or deleted from a data stream without loss of meaningful content. For point-to-point links valid Fill Words consist of Idle (see 5.2.7.3 and 5.3.6.1), ARBff (see 5.2.7.3), or LPI (see 5.3.6.1). See FC-AL-2 for Fill Words in a loop topology.

Fill Words as well as Primitive Sequences (see 5.2.7.5 and 5.2.7.3) may be deleted or inserted in the data stream to adapt between rates as well as for Alignment Marker insertion or deletion.

Only an allowed Special Function (i.e., Primitive Sequence, Idle, ARBff, or LPI) may be inserted in the data stream. If a Special Function is inserted in the transmit data stream, then it shall be the same as the Special Function that was last transmitted. If a Special Function is inserted in the receive data stream, then it shall be the same as the Special Function that was last received.

11.3.3 Frame Transmission

Frame transmission shall be performed by inserting a frame immediately following a series of Fill Words (see 11.3.2). Fill Words shall be transmitted immediately upon completion of the frame. A minimum of two Fill Words shall be transmitted consecutively following the EOF of each frame transmitted by any FC_Port transmitter.

If an FC_Port transmitter is repeating the Transmission Word stream of a receiver that is not capable of exercising buffer-to-buffer flow control (e.g., L_Ports with REPEAT true), the transmitter may insert or remove Fill Words from the Transmission Word stream in order to adjust for timing skew between the receiver and transmitter; however, it shall retain at least two Fill Words consecutively following each EOF.

If an FC_Port transmitter is repeating the Transmission Word stream of a receiver that is capable of exercising buffer-to-buffer flow control, the FC_Port shall transmit at least six Primitive Signals between each EOF and the next SOF. Of the six or more Primitive Signals transmitted, at least four shall be Fill Words.

If an FC_Port transmitter is not repeating the Transmission Word stream of a receiver, the FC_Port shall transmit at least six Primitive Signals between each EOF and the next SOF, unless Alignment Markers are being inserted or rate adaptation requires Primitive Signal deletion. Of the six or more Primitive Signals transmitted, at least four shall be Fill Words. If Alignment Marker insertion or rate adaptation require deletion of Primitive Signals, then the FC_Port shall retain at least two Fill Words consecutively following each EOF.

See FC-AL-2 for Arbitrated Loop specific frame transmission requirements. See 11.3.9 for frame reception requirements.

11.3.4 Frame byte order

The frame content shall be transmitted sequentially following the SOF delimiter as an ordered word stream within the definition of the frame as specified in figure 71, table 33, and figure 77 until the EOF delimiter is transmitted.

Table 33 relates the ordered byte stream transferred from the Upper Level Protocol (or FC-4) to the word stream that is encoded and transmitted onto a link.

A frame shall be assembled into a word stream, encoded, and transmitted in the following byte order:

A0, A1, A2, A3, B0, B1, B2, B3, B4 ...

B32, B33, B34, B35, C0, C1, C2, C3.

Table 33 - Frame byte order

Bits / Word	31 .. 24	23 .. 16	15 .. 08	07 .. 00
SOF	K28.5 A0	Dxx.x A1	Dxx.x A2	Dxx.x A3
0	R_CTL	D_ID		
	B0	B1	B2	B3
1	CS_CTL/ Priority	S_ID		
	B4	B5	B6	B7
2	TYPE	F_CTL		
	B8	B9	B10	B11
3	SEQ_ID	DF_CTL	SEQ_CNT	
	B12	B13	B14	B15
4	OX_ID		RX_ID	
	B16	B17	B18	B19
5	Parameter			
	B20	B21	B22	B23
6	Data_Field			
	B24	B25	B26	B27
7	Data_Field			
	B28	B29	B30	B31
n-1	CRC			
	B32	B33	B34	B35
EOF	K28.5 C0	Dxx.x C1	Dxx.x C2	Dxx.x C3

If there is one byte of fill and no ESP_Trailer (see 14.3) in the Data_Field of this frame, the fill byte is B31. With no optional header present, the relative offset (Parameter Field) shall be specified as follows:

a) relative offset + 0 specifies B24;
b) relative offset + 3 specifies B27; and
c) relative offset + 4 specifies B28.

For a relative offset of decimal 1024 (00 00 04 00h) the Parameter Field shall be specified as:

B20, B21, B22, B23 = 00 00 04 00h.

11.3.5 Emission Lowering Protocol

An FC-0 standard (e.g., FC-PI-3) may specify the use of Emission Lowering Protocol when using the 8B/10B transmission code.

When Emission Lowering Protocol is used, the Fill Word shall be the ARBff Ordered Set.

When Emission Lowering Protocol is not used, the Fill Word shall be the Idle Ordered Set.

11.3.6 Frame Scrambling

An FC-0 standard (e.g., FC-PI-3) may specify the use of Frame Scrambling when using the 8B/10B transmission code.

When Frame Scrambling is used, this clause defines how scrambling and descrambling shall be performed.

Frame Scrambling is used to reduce the probability of long strings of repeated patterns appearing on a link. Frame Scrambling may not change the probability of long strings of repeated patterns appearing on a link when the input data pattern is random. A scrambler and descrambler are specified that have self-synchronizing capabilities.

The Frame Scrambling algorithm has a low probability of creating patterns from random data input that may have failure modes on particular link technologies. The retry mechanisms specified in clause 19 require different values in the headers of the frames of the retried sequence and therefore will produce a different scrambled output, avoiding the identical failure mode.

All words transmitted between the Ordered Set used to denote the start of frame (SOF delimiter) and the Ordered Set used to denote the end of frame (EOF delimiter), including the CRC, shall be scrambled prior to performing 8B/10B encoding and descrambled after 8B/10B decoding. Ordered Sets shall not be scrambled.

Frame Scrambling shall be implemented so that its output is equivalent to the following function:

1) Upon transmission of the Ordered Set used to denote a start of frame (SOF delimiter), a 58-bit wide internal register is reset to an initial value of the low order 58 bits of the value 029438798327338h. The bits of the register are denoted R(n) for some number n in the range 58 .. 1. R(58) denotes the high-order bit of the register and R(1) denotes the low-order bit of the register; and
2) For each word that is to be scrambled for transmission, XOR it with R(58 .. 27) and XOR the result with R(39 .. 8). The result of the second XOR operation is transmitted. Then the content of the register is modified by first replacing R(58 .. 33) with R(26 .. 1) and then replacing R(32 .. 1) with the scrambled word that was transmitted.

NOTE 17 - This is equivalent to a self-synchronizing scrambler based on a linear feedback shift register that implements the polynomial $G(x) = x^{58} + x^{39} + 1$.

The scrambled words are transmitted in the same manner as unscrambled words, as defined in this standard.

Descrambling shall be implemented so that its output is equivalent to the following function:

1) Upon reception of the Ordered Set used to denote a start of frame (SOF delimiter), a 58-bit wide internal register is reset to an initial value of the low order 58 bits of the value 029438798327338h. The bits of the register are denoted R(n) for some number n in the range 58 .. 1. R(58) denotes the high-order bit of the register and R(1) denotes the low-order bit of the register; and
2) For each word that is to be descrambled upon reception, XOR it with R(58 .. 27) and XOR the result with R(39 .. 8). The result of the second XOR operation is the descrambled word that is received. Then the content of the register is modified by first replacing R(58 .. 33) with R(26 .. 1) and then replacing R(32 .. 1) with the scrambled word that was received.

NOTE 18 - This is equivalent to a self-synchronizing descrambler based on a linear feedback shift register that implements the polynomial $G(x) = x^{58} + x^{39} + 1$.

Annex C contains information on scrambling and descrambling implementations.

11.3.7 Start-of-Frame (SOF) delimiter

11.3.7.1 Introduction

The Start-of-Frame (SOF) delimiter is represented by an Ordered Set that immediately precedes the frame content. There are multiple SOF delimiters defined for Sequence control. Tables 66 and 70, respectively, specify allowable delimiters by class for Data and Link_Control frames. The bit encodings for the SOF delimiters are defined in table 13 and table 7. SOF_x is used to represent any SOF. The Ordered Set that represents each defined SOF delimiter is designated by the same name as the SOF delimiter. In contexts that do not make the distinction clear, the delimiter is designated by “SOF_x delimiter” and the Ordered Set that represents it is designated by “SOF_x Ordered Set”.

11.3.7.2 SOF Initiate (SOF_{ix})

11.3.7.2.1 Applicability

A Sequence shall be initiated and identified by using an SOF_{i2} Ordered Set or SOF_{i3} Ordered Set in the first frame. SOF_{ix} is used to represent these two SOF delimiters.

11.3.7.2.2 SOF Initiate Class 2 (SOF_{i2})

The SOF_{i2} Ordered Set shall be used on the first frame of a Sequence for Class 2 service.

11.3.7.2.3 SOF Initiate Class 3 (SOF_{i3})

The SOF_{i3} Ordered Set shall be used on the first frame of a Sequence for Class 3 service.

11.3.7.3 SOF Normal (SOF_{nx})

11.3.7.3.1 Applicability

The SOF_{n2} Ordered Set and SOF_{n3} Ordered Set identify the start of all frames other than the first frame of a Sequence based on class of service. SOF_{nx} is used to indicate SOF_{n2} and SOF_{n3}.

11.3.7.3.2 SOF Normal Class 2 (SOF_{n2})

The SOF_{n2} Ordered Set shall be used for all frames except the first frame of a Sequence for Class 2 service.

11.3.7.3.3 SOF Normal Class 3 (SOF_{n3})

The SOF_{n3} Ordered Set shall be used for all frames except the first frame of a Sequence for Class 3 service.

11.3.7.4 SOF Fabric (SOF_f)

If a PN_Port or Fx_Port receives a Class F frame, indicated by an SOF_f Ordered Set, it shall be discarded by the PN_Port or Fx_Port. The receiving PN_Port or Fx_Port may send an R_RDY.

NOTE 19 - Sending an R_RDY for a Class F frame is optional for a port not internal to the Fabric (i.e., a PN_Port or non-switch internal port). This allows backwards compatibility with existing implementations. New Implementations should send an R_RDY for class F frames.

11.3.8 End-of-Frame (EOF) delimiter

11.3.8.1 Introduction

The End-of-Frame (EOF) delimiter is represented by an Ordered Set that immediately follows the CRC. The EOF Ordered Set shall designate the end of the frame content and shall be followed by Fill Words. The Ordered Set that represents each defined EOF delimiter is designated by the same name as the EOF delimiter. In contexts that do not make the distinction clear, the delimiter is designated by “EOFx delimiter” and the Ordered Set that represents it is designated by “EOFx Ordered Set”.

Table 66 and table 70, respectively, specify allowable delimiters by class for Data and Link_Control frames. There are three categories of EOF Ordered Sets:

a) the first category shall indicate that the frame is valid from the sender's perspective and potentially valid from the receiver's perspective;
b) the second category (EOF_{ni}) shall indicate that the frame content is invalid. This category shall only be used by an Fx_Port that receives a complete frame and decodes it before forwarding it; and
c) the third category (EOF_a) shall indicate the frame content is corrupted and the frame was truncated during transmission. The third category shall be used by FC_Ports to indicate an internal malfunction (e.g., a transmitter failure that does not allow the entire frame to be transmitted normally).

The bit encodings for the EOF Ordered Set are defined in table 13 and table 7.

All frames other than the last frame of a Sequence shall be terminated with an EOF_n Ordered Set.

Each Sequence shall terminate with an EOF_t Ordered Set.

If an Fx_Port detects a frame error, the Fx_Port shall replace either an EOF_n Ordered Set or an EOF_t Ordered Set of the frame in error with the EOF_{ni} Ordered Set.

EOF_x is used to represent any EOF.

11.3.8.2 Valid frame content

11.3.8.2.1 EOF Normal (EOF_n)

The EOF_n Ordered Set shall identify the end of frame when one of the other EOF Ordered Sets indicating valid frame content is not required.

11.3.8.2.2 EOF Terminate (EOF_t)

The EOF_t Ordered Set shall indicate that the Sequence associated with this SEQ_ID is complete. EOF_t shall be used to properly close a Sequence without error.

11.3.8.3 Invalid frame content

11.3.8.3.1 General

There are two EOF Ordered Sets that indicate that the frame content is invalid. If a frame is received by a facility internal to a Fabric and an error is detected within the frame content, the frame may be forwarded with a modified EOF to indicate that an error was previously detected. Error detection in the frame content by the Fabric is optional.

Errors such as code violation or CRC errors are examples of detectable frame errors.

When a frame is received with an EOF Ordered Set that indicates the frame content is invalid, the invalid frame condition shall be reported by the entity that replaces the EOF Ordered Set that indicates invalid frame content. The destination PN_Port, at its discretion, may report the event of receiving a frame with one of these delimiters.

Errors are counted at the point where they are detected. Events may also be reported at the point where they are recognized.

11.3.8.3.2 EOF Abort (EOF_a)

The EOF_a Ordered Set shall terminate a partial frame due to a malfunction in a link facility during transmission. The frame shall end on a word boundary and shall be discarded by the receiver without transmitting a reply. If the transmitter retransmits the aborted frame, it shall transmit the frame with the same SEQ_CNT.

An invalid EOF (i.e., EOF_{ni}) Ordered Set may be changed to an EOF_a Ordered Set under the conditions specified for EOF_a.

EOF_a Ordered Sets shall not be changed to an invalid EOF Ordered Set under any conditions.

It is also used by the Fabric to replace missing EOF Ordered Sets or to truncate over length frames.

11.3.8.3.3 EOF Invalid (EOF_{ni})

The EOF_{ni} Ordered Set shall replace an EOF_n Ordered Set or EOF_t Ordered Set, indicating that the frame content is invalid.

The receiver shall process the frame containing the EOF_{ni} Ordered Set in the following manner:

a) no response frame shall be transmitted; and
b) the Data_Field may be used at the receiver's discretion (see 11.3.9.3).

11.3.9 Frame reception

11.3.9.1 Rules

The following list specifies frame reception rules:

a) data bytes received outside the scope of a delimiter Ordered Set pair (SOF and EOF) shall be discarded;
b) frame reception shall be started by recognition of a SOF Ordered Set;
c) detection of a code violation after frame reception is started but before frame reception is terminated shall be identified as an invalid Transmission Word within the frame;
d) frame reception shall continue until an Ordered Set, or a Link Failure is detected;
e) if the number of bytes in the Data_Field of the frame exceeds the maximum allowable Data_Field size for the type of frame indicated by the SOF Ordered Set (see clause 17), an FC_Port may consider the frame invalid and discard Data_Field bytes as received. However, an Ordered Set or Link Failure shall still terminate frame reception. An FC_Port is also allowed to receive the entire frame. In acknowledged classes of service, if the frame is valid other than for its length:
   A) a PN_Port shall respond with a P_RJT with Reason Code set to Incorrect length (i.e., 13h); and
   B) an Fx_Port shall respond with an F_RJT with Reason Code set to Incorrect length (i.e., 13h);

   and
f) in either process or discard policy, if an EOF_a terminates frame reception, the entire frame shall be discarded, including the Frame_Header and Data_Field.

11.3.9.2 Frame validity

A frame is valid at the FC-2P sublevel if it meets all of these conditions:

a) the Ordered Set terminating the frame is one of EOF_n or EOF_t;
b) the length of the frame content is a multiple of four bytes; and
c) the frame content includes no invalid Transmission Words.

11.3.9.3 Invalid frame processing

A frame is invalid if it does not meet the conditions for validity at the FC-2P sublevel (see 11.3.9.2) and the FC-2V sublevel (see 11.4.5).

During normal processing of valid frames, errors may be detected that are rejectable in Class 2 using the P_RJT Link_Response frame (see 15.3.3.4). P_RJT frames shall not be transmitted for invalid frames. If a rejectable error condition or a busy condition is detected for a valid Class 3 frame, the frame shall be discarded.

When errors (e.g., invalid Transmission Word and invalid CRC) are detected, the event count in the Link Error Status Block shall be updated (see 22.4.8). If delimiter usage does not follow allowable delimiters by class as specified in tables 66 and 70, a valid frame shall be considered rejectable.

If a PN_Port is able to determine that an invalid frame is associated with an Exchange that is designated as operating under Process policy, the PN_Port may process and use the Data_Field at its discretion, otherwise, the entire invalid frame shall be discarded.

When a frame is corrupted, it is not known if the Frame_Header is correct. The X_IDs, SEQ_ID, SEQ_CNT, and Parameter fields may not contain reliable information. The error may cause a misrouted frame to have a D_ID that appears to be correct. Such a frame may be used under very restricted conditions.

11.4 Frame Content

11.4.1 Scope

Within the frame content, addressing information supports the functionality of the FC-2M sublevel and the FC-2V sublevel. All other frame content supports the functionality of the FC-2V sublevel, higher levels, and ULPs.

11.4.2 Extended_Headers

Extended_Headers, if present, shall immediately follow the SOF delimiter. Each Extended_Header is identified by a certain value of its first byte (R_CTL, see table 35). Extended_Headers shall be transmitted on a word boundary. Extended_Headers are defined in clause 13.

11.4.3 Frame_Header

The Frame_Header shall immediately follow the SOF delimiter if no Extended_Headers are present, or shall follow the last Extended_Header present, for all frames. The Frame_Header shall be transmitted on a word boundary. The Frame_Header is used by the LCF to control link operations, control device protocol transfers, and detect missing or out of order frames. The Frame_Header is defined in clause 12.

11.4.4 Data_Field

The Data_Field shall follow the Frame_Header and shall be aligned on a word boundary. The size of the Data_Field shall be a multiple of four bytes and may be zero.

11.4.5 CRC

The Cyclic Redundancy Check (CRC) is a four byte field that shall immediately follow the Data_Field and shall be used to verify the data integrity of the data within its scope. The CRC scope shall be the Extended_Headers, if any, the Frame_Header, and the Data_Field. SOF and EOF delimiters shall not be included in the CRC scope. The CRC field for a frame shall be calculated prior to encoding and any scrambling of the frame for transmission and after decoding and any descrambling of the frame upon reception. The CRC field shall be aligned on a word boundary.

The CRC specified in this standard follows the Frame Check Sequence (FCS) specified in Fiber Distributed Data Interface – Media Access Control (see FDDI-MAC). The FDDI-MAC FCS is specified as a binary polynomial arithmetic expression acting on a generator polynomial and a data input polynomial whose coefficients are the bits of the CRC scope, and producing an FCS polynomial. The CRC scope shall be mapped to a data polynomial for FDDI-MAC FCS calculation by:

1) reversing the order of the bits in the first byte of the CRC scope;
2) using the most significant bit of the revised first byte in the CRC scope as the most significant coefficient of the data polynomial;

3) using successively less significant bits of the revised first byte in the CRC scope as successively less significant coefficients of the data polynomial; and
4) following steps 1-3 for each successive byte of the CRC scope to generate successively less significant groups of eight coefficients of the data polynomial.

An informative diagram of this mapping is given in figure 72.

The CRC field value shall be mapped from the FCS polynomial derived from the FDDI-MAC FCS calculation by:

1) extending the FCS polynomial to 32 coefficients by adding zero value coefficients at the most significant end;
2) reversing the order of the first eight coefficients of the FCS polynomial;
3) using the most significant coefficient of the revised first eight coefficients in the FCS polynomial as the most significant bit of the CRC field value;
4) using successively less significant coefficients of the revised first eight coefficients in the FCS polynomial as successively less significant bits of the CRC field value; and
5) following steps 2-4 for each successive eight coefficients of the FCS polynomial to generate successively less significant bytes of the CRC field value.

An informative diagram of the mapping of the extended FCS polynomial to the CRC field value is given in figure 73.

See Annex B for informative extracts from the normative text in FDDI-MAC and an example of the CRC generation process for a frame.

If the frame CRC for a received frame is not valid, the frame is invalid at the FC-2V sublevel, and it shall be processed in the same manner as frames that are not valid at the FC-2P sublevel (see 11.3.9.2).

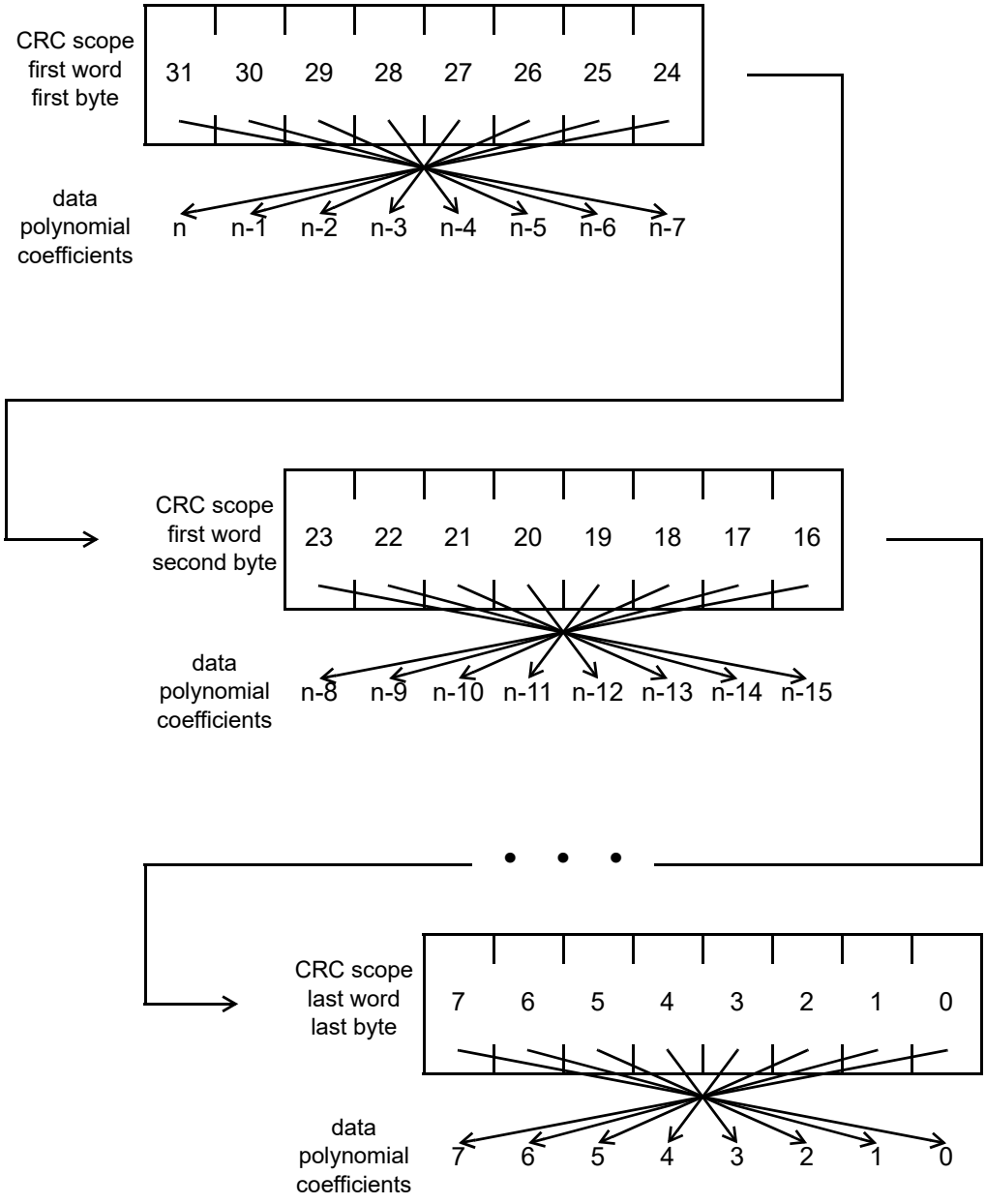

The bits within each byte of level FC-2V data, including the CRC field itself, are reversed from the order of the coefficients in each group of eight coefficients of the FDDI-MAC FCS polynomial calculation, but the order of the bytes within the frame is retained. This reflects the same reversal that is applied by transmission codes used for Fibre Channel frames.

Figure 72 - Informative diagram of mapping CRC scope to FCS input

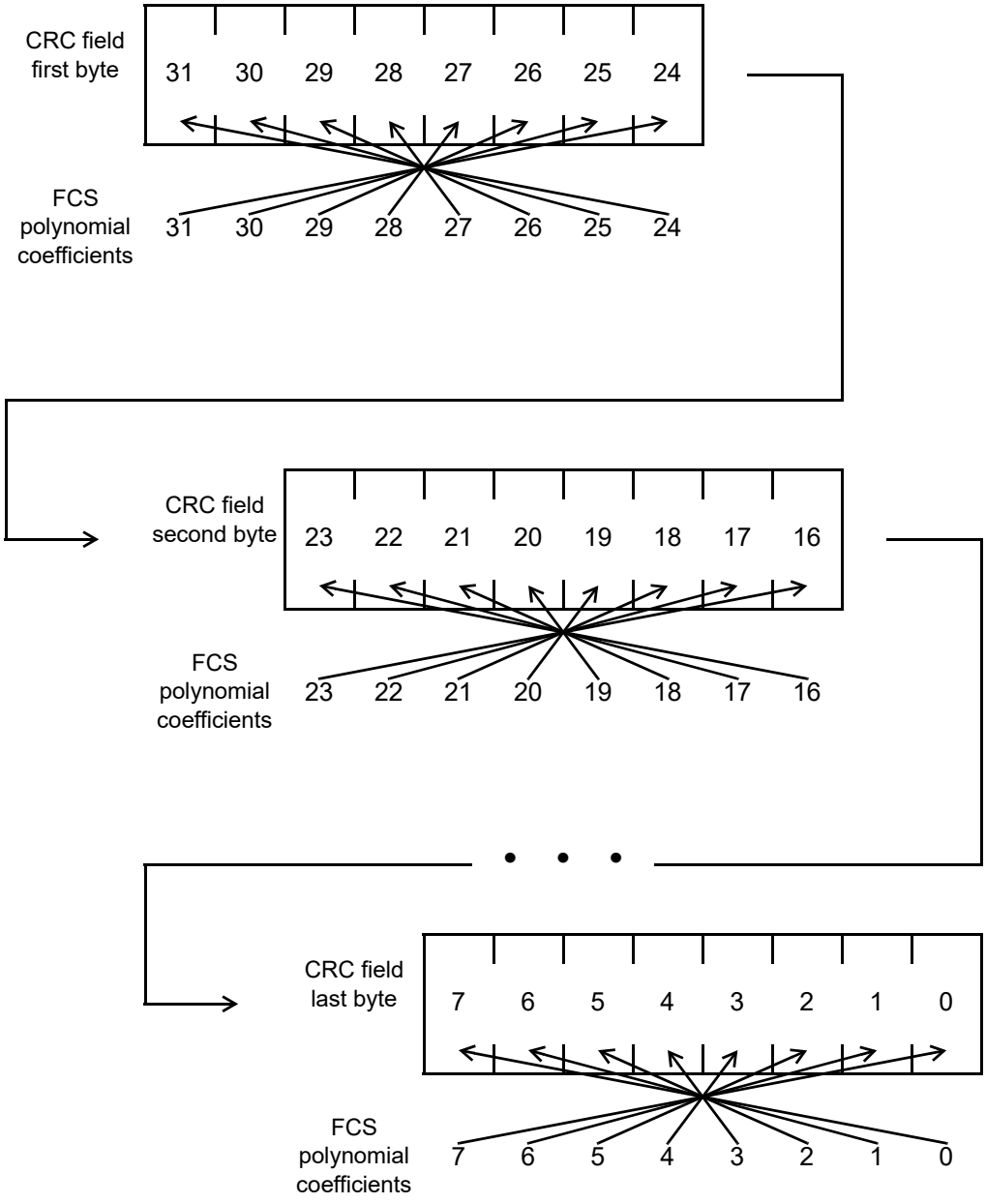

Figure 73 - Informative diagram of mapping FCS coefficients to CRC field

12 Frame_Header

12.1 Scope

Within the Frame_Header, addressing information (i.e., the S_ID and D_ID) supports the functionality of the FC-2M sublevel and the FC-2V sublevel. All other Frame_Header information supports the functionality of the FC-2V sublevel.

12.2 Introduction

The Frame_Header shall be subdivided into fields as shown in table 34.

Table 34 - Frame_Header

Bits Word	31 .. 24	23 .. 16	15 .. 08	07 .. 00
0	R_CTL	D_ID		
1	CS_CTL/Priority	S_ID		
2	TYPE	F_CTL		
3	SEQ_ID	DF_CTL	SEQ_CNT	
4	OX_ID		RX_ID	
5	Parameter			

The Frame_Header shall immediately follow the SOF delimiter, if no Extended_Headers are present, or shall follow the last Extended_Header present, and shall be transmitted on a word boundary. The Frame_Header is used to control link operations and device protocol transfers as well as detect missing or out of order frames.

12.3 Routing Control (R_CTL)

12.3.1 Introduction

The R_CTL field is a one-byte field in Word 0 Bits 31-24 that contains routing bits and information bits to categorize the frame function. When the R_CTL field is used in combination with the TYPE field (Word 2, bits 31-24), it provides an Nx_Port with assistance in frame routing, data routing, or addressing.

The R_CTL field is further subdivided into the ROUTING field (bits 31-28) and the INFORMATION field (bits 27-24).

12.3.2 ROUTING Field

Table 35 shows the frame types associated with the ROUTING field.

Table 35 - R_CTL - Type Code Summary

R_CTL		Frame type
ROUTING	INFORMATION	
0h	(see table 36)	Device_Data frames (see clause 15)
2h	(see FC-LS-4)	Extended Link Services (see FC-LS-4)
3h	(see table 38)	FC-4 Link_Data (see relevant FC-4 standard)
4h	(see table 39)	Video_Data (see FC-AV and ARINC 818)
5h	(see table 54)	Extended_Headers (see 13)
8h	(see table 79)	Basic Link Services (see clause 16)
Ch	(see table 69)	Link_Control Frame (see 15.3)
Fh	(see table 40)	Extended Routing (no standard usage is specified)
Others	Reserved	Reserved

12.3.3 INFORMATION Field

The INFORMATION field is included in R_CTL to assist the receiver of a Data frame in directing the Data_Field content to the appropriate buffer pool.

The R_CTL field for Device_Data frames shall be set according to table 36.

Table 36 - Device_Data Information Categories

R-CTL		Description
ROUTING	INFORMATION	
0h	0h	Uncategorized information
	1h	Solicited Data
	2h	Unsolicited Control
	3h	Solicited Control
	4h	Unsolicited Data
	5h	Data Descriptor
	6h	Unsolicited Command
	7h	Command Status
	8h	Extended Command Status
	9h	Extended Unsolicited Control
	Ah	Extended Solicited Control
	Others	Reserved

The INFORMATION field value of "Uncategorized information", does not offer assistance in routing.

When the ROUTING field is 0h and the INFORMATION field is 5h, the Data Descriptor is formatted as shown in table 37.

Table 37 - Data Descriptor Payload

Item	Size-Bytes
Offset of data being transferred	4
Length of data being transferred	4
Reserved	4
Other optional information (FC-4 dependent)	max

The R_CTL field for FC-4 Link_Data frames shall be set according to table 38.

Table 38 - FC-4 Link_Data Information Categories

R-CTL		Description
ROUTING	INFORMATION	
3h	0h	Uncategorized information
	1h	Solicited Data
	2h	Unsolicited Control
	3h	Solicited Control
	4h	Unsolicited Data
	5h	Data Descriptor
	6h	Unsolicited Command
	7h	Command Status
	Others	Reserved

The R_CTL field for Video_Data frames shall be set according to table 39.

Table 39 - Video_Data Information Categories

R_CTL		Description
ROUTING	INFORMATION	
4h	4h	Unsolicited Data
	Others	Reserved

The R_CTL field for Extended Routing frames shall be set according to table 40.

Table 40 - Extended Routing Information Categories

R_CTL		Description
ROUTING	INFORMATION	
Fh	0h	Vendor Unique
	Others	Reserved

12.4 Address identifiers (D_ID, S_ID)

12.4.1 General

Each Nx_Port shall have a native N_Port_ID that is unique within the address domain of a Fabric.

An N_Port_ID of binary zeros indicates that an Nx_Port is unidentified. When a PN_Port completes link initialization, it shall be unidentified (i.e., it shall have a single Nx_Port for which the N_Port_ID is 00 00 00h). While a PN_Port is unidentified, it shall

a) accept all frames with any D_ID value;
b) not Reject (P_RJT) any frames with a reason code of “Invalid D_ID”; and
c) Reject (P_RJT) frames other than Basic and Extended Link Service with a reason code of “Login required”.

An Nx_Port determines its N_Port_ID by performing the Fabric Login protocol (see 4.10.5.2) or the Additional N_Port_ID protocol (see 4.10.5.3) as specified in FC-LS-4. During either protocol, an Nx_Port may be assigned an N_Port_ID or it may determine its own N_Port_ID.

12.4.2 Reserved address identifiers

Address identifiers in the range of FF FC 01h to FF FC FEh are reserved for Domain Controllers. Address identifiers in the range of FF FF F0h to FF FF FEh are reserved for well-known addresses. The address identifier of FF FF FFh is reserved as a broadcast address. See table 41 for the complete list.

12.4.3 Destination_ID (D_ID)

The D_ID is a three-byte field (Word 0, Bits 23-0) that shall contain the address identifier of the destination Nx_Port.

12.4.4 Source_ID (S_ID)

The S_ID is a three-byte field (Word 1, Bits 23-0) that shall contain the address identifier of the source Nx_Port.

Table 41 - Domain Controller and Well-known address identifiers

Address Value	Description
FF FC 01h to FF FC FEh	Reserved for Domain Controllers
FF FF F0h	N_Port Controller (see FC-LS-4)
FF FF F1h to FF FF F3h	Reserved
FF FF F4h	Event Service (see FC-GS-8)
FF FF F5h	Multicast Server - Obsolete
FF FF F6h	Clock Synchronization Service (see clause 24)
FF FF F7h	Security Key Distribution Service - Obsolete
FF FF F8h	Alias Server - Obsolete
FF FF F9h	Reserved
FF FF FAh	Management Service (see FC-GS-8)
FF FF FBh	Time Service - Obsolete
FF FF FCh	Directory Service (see FC-GS-8)
FF FF FDh	Fabric Controller (see FC-SW-7)
FF FF FEh	F_Port Controller (see FC-SW-7)
FF FF FFh	Broadcast address identifier (see 23.3)

12.5 Class Specific Control (CS_CTL)/Priority

12.5.1 Introduction

The meaning of the CS_CTL field is controlled by the CS_CTL/Priority Enable bit (F_CTL, bit 17). When the CS_CTL/Priority Enable bit is set to zero, word 1, bits 31-24 shall be interpreted to be CS_CTL information as defined in 12.5.1.1. When the CS_CTL/Priority Enable bit is set to one, word 1, bits 31-24 shall be interpreted to be Priority information as described in 12.5.2.

12.5.1.1 CS_CTL

When bit 17 of F_CTL is set to zero, Word 1, bits 31-24 of the Frame_Header is defined as the CS_CTL field. The CS_CTL field is defined in table 42.

Table 42 - CS_CTL field

Bits	Abbr.	Meaning
31	PREF	0 = Frame is delivered with no Preference 1 = Frame may be delivered with Preference
30		Reserved for additional Preference function
29-24	DSCP	Differentiated Services Code Point

PREF shall be meaningful in all frames.

Bits 29-24 shall be used to define policies to differentiate traffic flows. The default value shall be 000000b, that is defined as the best effort QoS. Other values are defined in RFC 2597, “Assured Forwarding PHB Group”, and RFC 2598, “An Expedited Forwarding PHB”. Values other than 000000b and those defined in the referenced RFCs are reserved.

12.5.2 Priority

When supported by Nx_Ports (see FC-LS-4), the Priority field shall be used to resolve resource contention or to determine the order to deliver frames or to tag frames.

Word 1, bits 31-24 of the Frame_Header shall be defined as the Priority field when the CS_CTL/Priority Enable bit (F_CTL, bit 17) is set to one. The Priority field contains priority information for the class of service identified by the SOF. A value of 0000000b in word 1, bits 31-25 shall indicate that no priority has been assigned to the frame. The remaining values shall indicate the relative priority of the frame, where the relative priority is monotonically increasing within an implemented range. An implementation may define a subset of contiguous priority values, where all values outside the implemented subset of values are treated as if no priority has been assigned to the frame.

The Priority field is defined in table 43.

Table 43 - Priority field

Word 1, bit(s)	Meaning
31-25	Priority
24	Tagging Extension

Word 1, bits 31-25 shall be the priority. The priority for a Sequence shall be established by the priority provided by the Sequence Initiator SOFi2 or SOFi3 frame. The Sequence Initiator should set the Priority to the same value for all frames in a given Sequence. Changing priority in subsequent frames in a Sequence may result in out of order delivery of Data frames. However, priority does not in itself guarantee in order delivery. Both the Fabric and the Nx_Ports shall not be required to validate the consistency of the Priority field throughout a Sequence.

Word 1, bit 24 is the Tagging Extension. The whole Priority field (i.e., bits 31-25 plus the Tagging Extension bit) is used to tag frames according to the Priority Tagging mechanism (see FC-LS-4).

12.6 Data structure type (TYPE)

The data structure type (TYPE) is a one-byte field (Word 2, Bits 31-24) that shall identify the protocol of the frame content for Data frames.

When the Routing field (word 0, bits 31-28) indicates a Link_Control frame other than F_BSY, the TYPE field (word 0, bits 31-24) is reserved. F_BSY frames use the TYPE field to indicate a reason code for the F_BSY. When the F_BSY is in response to a Link_Control frame, the Information category field (word 0, bits 27-24) of the busied frame is copied by the Fabric into the TYPE field (word 2, bits 27-24). The bit encodings are shown in table 69.

NOTE 20 - Copying the Link_Control command code allows a source Nx_Port to easily retransmit the frame if it is busied by the Fabric (see 15.3.3.2).

When the Routing bits in R_CTL indicate Basic or Extended Link_Data, TYPE codes are decoded as shown in table 44.

Table 44 - TYPE codes - Link Service

Encoded Value Word 2, bits 31-24	Description
00h	Basic Link Service
01h	Extended Link Service
02h to CFh	Reserved
D0h to FFh	Vendor specific

When the Routing bits in R_CTL indicate Video_Data, the TYPE codes are decoded as shown in table 45.

Table 45 - TYPE codes - Video_Data

Encoded Value Word 2, bits 31-24	Description
02h to 5Fh	Reserved
60h	FC-AV Container (see FC-AV)
61h	ARINC 818 (see ARINC 818)
62h to 63h	Reserved for FC-AV
64h to CFh	Reserved
D0h to FFh	Vendor specific

When the Routing bits in R_CTL indicate FC-4 Device_Data or FC-4 Link_Data TYPE codes are decoded as shown in table 46

Table 46 - TYPE codes - FC-4 (Device_Data and Link_Data) (part 1 of 2)

Encoded Value in Word 2, bits 31-24	Description
00h to 03h	Reserved
04h	Obsolete
05h	IPv4, IPv6, and ARP over Fibre Channel (see RFC 2625, RFC 3831, RFC 4338 [b])
06h to 07h	Reserved
08h	Fibre Channel Protocol (see FCP-4)
09h	Obsolete
0Ah	Additional FCP Features (see FCP-4) [a]
0Bh to 0Fh	Reserved - SCSI
10h	Reserved
11h to 13h	Obsolete
14h	Fibre Channel SATA Tunnelling Protocol (see FC-SATA)
15h to 17h	Reserved
18h	Allocated for SBCCS (see FC-SB-6)
19h	Obsolete
1Ah	Obsolete
1Bh	SBCCS Channel to Control Unit (see FC-SB-6)
1Ch	SBCCS Control Unit to Channel (see FC-SB-6)
1Dh to 1Fh	Reserved for SBCCS
20h	Fibre Channel Common Transport (see FC-GS-8)
21h	Reserved
22h	Switch Fabric Internal Link Services (see FC-SW-7)
23h	Obsolete
24h	Obsolete
25h	Inter-Fabric Router Internal Link Services (see FC-IFR)
26h to 27h	Reserved - Fabric infrastructure
28h	NVMe over Fibre Channel (see FC-NVMe)
29h	Remote Direct Memory Access over Fibre Channel (see FC-~~RDMAPM~~RDMA)

[a] This TYPE code is used to identify a protocol related feature. It shall not appear in the TYPE field of a Frame_Header.

[b] The IETF has published RFC 4338, which obsoletes both RFC 2625 and RFC 3831

Table 46 - TYPE codes - FC-4 (Device_Data and Link_Data) (part 2 of 2)

Encoded Value in Word 2, bits 31-24	Description
2Ah to 3Fh	Reserved
40h	HIPPI-FP
41h to 47h	Reserved
48h	MIL-STD-1553 (see FC-AE-1553)
49h	ASM (see FC-AE-ASM)
4Ah to 4Fh	Reserved for future use in a standard for the Fibre Channel Avionics Environment (e.g., a successor to FC-AE-ASM)
50h to 57h	Reserved for future use in a standard for the Fibre Channel Backbone (e.g., a successor to FC-BB-6)
58h	Virtual Interface (see FC-VI)
59h to 5Fh	Reserved
60h	Application Services (see FC-GS-8) [a]
61h to DDh	Reserved
DEh	Generic Fibre Channel Features (see FC-GS-8) [a]
DFh	Allocated for RNID General Topology Discovery page identification (see FC-LS-4) [a]
E0h to FFh	Vendor specific

[a] This TYPE code is used to identify a protocol related feature. It shall not appear in the TYPE field of a Frame_Header.

[b] The IETF has published RFC 4338, which obsoletes both RFC 2625 and RFC 3831

12.7 Frame Control (F_CTL)

12.7.1 Introduction

The Frame Control (F_CTL) field (Word 2, Bits 23-0) is a three-byte field that contains control information relating to the frame content. The remaining subclauses in 12.7 describe the valid uses of the F_CTL bits. If an error in bit usage is detected, a reject frame (P_RJT) shall be transmitted in response with an appropriate reason code (see 15.3.3.4) for Class 2. The format of the F_CTL bits are defined in table 47.

When a bit is designated as meaningful under a set of conditions, that bit shall be ignored if those conditions are not present (e.g., Bit 18 is only meaningful when bit 19 is set to one; this means that bit 18 shall be ignored unless bit 19 is set to one).

Table 47 - Exchange/Sequence Control (F_CTL) (part 1 of 2)

Control Field	Word 2 Bits	Description	Reference
Exchange Context	23	0 = Originator of Exchange 1 = Responder of Exchange	12.7.2.
Sequence Context	22	0 = Sequence Initiator 1 = Sequence Recipient	12.7.3
First_Sequence	21	0 = Sequence other than first of Exchange 1 = first Sequence of Exchange	12.7.4
Last_Sequence	20	0 = Sequence other than last of Exchange 1 = last Sequence of Exchange	12.7.5
End_Sequence	19	0 = Data frame other than last of Sequence 1 = last Data frame of Sequence	12.7.6
	18	Reserved	
CS_CTL/Priority Enable	17	0 = Word 1, Bits 31-24 = CS_CTL 1 = Word 1, Bits 31-24 = Priority	12.7.7
Sequence Initiative	16	0 = hold Sequence Initiative [a] 1 = transfer Sequence Initiative	12.7.8
	15	Reserved	
	14	Reserved	
ACK_Form	13-12	00b = No assistance provided 01b = Ack_1 Required 10b = reserved 11b = Ack_0 Required	12.7.9
	11	Reserved	
	10	Reserved	
Retransmitted Sequence - Obsolete	9	Shall be set to zero	
Unidirectional Transmit - Obsolete	8	Shall be set to zero	
Continue Sequence Condition - Obsolete	7-6	Shall be set to zero	

[a] The F_CTL bit for Sequence Initiative (i.e., bit 16) when set to zero has a different meaning for the FLUSH command and FLUSH_RSP. Instead of indicating that Sequence Initiative is held, it indicates that Sequence Initiative for the Exchange is not affected by the FLUSH command or FLUSH_RSP.

Table 47 - Exchange/Sequence Control (F_CTL) (part 2 of 2)

Control Field	Word 2 Bits	Description	Reference
Abort Sequence Condition	5-4	ACK frame - Sequence Recipient 00b = Continue sequence 01b = Abort Sequence, Perform ABTS 10b = Stop Sequence 11b - Obsolete Data frame (1st of Exchange) - Sequence Initiator 00b = Abort, Discard multiple Sequences 01b = Abort, Discard a single Sequence 10b = Process policy with infinite buffers 11b - Obsolete	12.7.10
Relative offset present	3	0 = Parameter field defined for some frames 1 = Parameter Field = relative offset	12.7.11
Exchange reassembly	2	Reserved for Exchange reassembly	
Fill Bytes	1-0	End of Payload - bytes of fill 00b = 0 bytes of fill 01b = 1 byte of fill (first byte following Payload) 10b = 2 bytes of fill (first two bytes following Payload) 11b = 3 bytes of fill (first three bytes following Payload)	12.7.13

[a] The F_CTL bit for Sequence Initiative (i.e., bit 16) when set to zero has a different meaning for the FLUSH command and FLUSH_RSP. Instead of indicating that Sequence Initiative is held, it indicates that Sequence Initiative for the Exchange is not affected by the FLUSH command or FLUSH_RSP.

12.7.2 Exchange Context

An Exchange shall be started by the Originator Nx_Port (see 19.6.2). The other Nx_Port of the Exchange shall be known as the Responder (see 19.6.3). If the Exchange Context bit (bit 23) is set to zero, the S_ID is associated with the Exchange Originator. If the bit is set to one, the S_ID is associated with the Exchange Responder.

12.7.3 Sequence Context

A Sequence shall be started by a Sequence Initiator facility within an Nx_Port. The destination Nx_Port of the Sequence shall be known as the Sequence Recipient. If the Sequence Context (bit 22) bit is set to zero, it indicates that the S_ID is associated with the Sequence Initiator. If the bit is set to one, it indicates that the S_ID is associated with the Sequence Responder. This indicates the Sequence context.

Knowledge of Sequence context is required for proper handling of Link_Control frames received in response to Data frame transmission in Class 2. When a Busy frame is received, it may be in response to a Data frame (Sequence Initiator) or to an ACK frame (Sequence Recipient).

12.7.4 First_Sequence

The First_Sequence bit (bit 21) shall be set to one on all frames in the first Sequence of an Exchange (see 19.4.2). It shall be set to zero for all other Sequences within an Exchange.

12.7.5 Last_Sequence

The Last_Sequence bit (bit 20) shall be set to one on the last Data frame in the last Sequence of an Exchange (see 19.4.13). However, it may be set to one on a Data frame prior to the last frame. Once it is set to one, it shall be set to one on all subsequent Data frames in the last Sequence of an Exchange. It shall be set to zero for all other Sequences within an Exchange. This bit shall be set to the same value in the Link_Control frame as the Data frame to which it corresponds.

NOTE 21 - The early transition of this bit, unlike other F_CTL bits, is permitted as a hardware assist by providing an advance indication that the Sequence is nearing completion.

12.7.6 End_Sequence

The End_Sequence bit (bit 19) shall be set to one on the last Data frame of a Sequence. In Class 2, the final ACK with this bit set to one confirms the end of the Sequence, however, the SEQ_CNT shall match the last Data frame delivered that may not be the last Data frame transmitted. This indication is used for Sequence termination by the two Nx_Ports involved in addition to EOF_t (see 19.4.8). This bit shall be set to zero for all other frames within a Sequence.

12.7.7 CS_CTL/Priority Enable

When the CS_CTL/Priority Enable bit (bit 17) is set to zero, word 1, bits 31-24 of the Frame_Header shall be interpreted to be the CS_CTL field as described in 12.5.1.1. When CS_CTL/Priority Enable is set to one, word 1, bits 31-24 of the Frame_Header shall be interpreted to be the Priority field as described in 12.5.2.

The Sequence Initiator shall set CS_CTL/Priority Enable to the same value for all frames in a given Sequence.

Both the Fabric and the Nx_Ports shall not be required to validate the constancy of CS_CTL/Priority Enable throughout a Sequence.

12.7.8 Sequence Initiative

The Originator of an Exchange shall initiate the first Sequence as the Sequence Initiator. If the Sequence Initiative bit (bit 16) is set to zero, the Sequence Initiator shall hold the initiative to continue transmitting Sequences for the duration of this Sequence Initiative. The Sequence Recipient gains the initiative to transmit a new Sequence for this Exchange after the Sequence Initiative has been transferred to the Recipient (see 19.7.5). This shall be accomplished by setting the Sequence Initiative bit to one in the last Data frame of a Sequence (End_Sequence set to one). In Class 2, the Sequence Initiator shall consider Sequence Initiative transferred when the ACK to the corresponding Data frame is received with the Sequence Initiative bit set to one. Setting bit 16 to one is only meaningful when End_Sequence is set to one. For a FLUSH command or FLUSH_RSP, if the Sequence Initiative bit (bit 16) is set to zero, the Sequence Initiative for the Exchange is not affected.

12.7.9 ACK_Form

The ACK_Form bits (bits 13-12) provide an optional assistance to the Sequence Recipient by translating the ACK capability bits in the Nx_Port Class Service Login Parameters into an F_CTL field accompanying the frame to be acknowledged (see 15.4.4). ACK_Form is meaningful on all Class 2 Data frames of a Sequence. ACK_Form is not meaningful on Class 2 Link_Control frames, or any Class 3 frames. The meaning of the ACK_Form bits is given in table 47.

12.7.10 Abort Sequence Condition

The Abort Sequence Condition bits (bits 5-4) shall be set to a value by the Exchange Originator on the first Data frame of an Exchange to indicate that the Exchange Originator is requiring a specific error policy for the Exchange. For Class 3 operation between VN_Ports that have negotiated to allow Process with infinite buffering Error Policy (see 22.5.4.3), the Abort Sequence Condition bits shall be set to indicate the same error policy on every Data frame within the Exchange. In Class 2 operation, the error policy passed in the first frame of the first Sequence of an Exchange shall be the error policy supported by both Nx_Ports participating in the Exchange, and the Abort Sequence Condition bits shall not be meaningful on other Data frames within the Exchange.

The definition of the Abort Sequence Condition bits by the Sequence Initiator is given in table 48.

Table 48 - Abort Sequence Condition Bits Definition by Sequence Initiator

Encoding	Meaning
00b	In the Abort, Discard multiple Sequences Error Policy, the Sequence Recipient shall deliver Sequences to the FC-4 or upper level in the order transmitted under the condition that the previous Sequence, if any, was also deliverable. If a Sequence is determined to be non-deliverable, all subsequent Sequences shall be discarded until the ABTS protocol has been completed. The Abort, Discard multiple Sequences Error Policy shall be supported.
01b	In the Abort, Discard a single Sequence Error Policy, the Sequence Recipient may deliver Sequences to the FC-4 or upper level in the order that received Sequences are completed by the Sequence Recipient without regard to the deliverability of any previous Sequences. The Abort, Discard a single Sequence Error Policy shall be supported.
10b	In the Process policy with infinite buffers, frames shall be delivered to the FC-4 or upper level in the order received. Process policy with infinite buffers shall only be allowed in Class 3.
11b	Obsolete

An Nx_Port, in the PLOGI sequence shall indicate process policy support. Discard policy shall be supported.

If the delivery order of Sequences, without gaps, is required by an FC-4 to match the transmission order of Sequences within an Exchange, then one of the two Discard multiple Sequence Error Policies is required. In the Discard a Single Sequence Error Policy, out of order Sequence delivery is to be expected and handled by the FC-4 or upper level.

The Abort Sequence Condition bits shall be set to a value other than zeros by the Sequence Recipient in an ACK frame to indicate to the Sequence Initiator that the Sequence Recipient has detected an abnormal condition, malfunction, or error.

The definition of the Abort Sequence Condition bits by the Sequence Recipient is given in table 49.

Table 49 - Abort Sequence Condition Bits Definition by Sequence Recipient

Encoding	Meaning
00b	Continue Sequence
01b	A request by the Sequence Recipient to the Sequence Initiator to terminate this Sequence using the Abort Sequence protocol and then optionally perform Sequence recovery. See FC-LS-4 and 22.5.5.2.2 for a description of the Abort Sequence protocol.
10b	A request by the Sequence Recipient to the Sequence Initiator to stop this Sequence. This allows for a request for an early termination by the Sequence Recipient. Some of the data received may have been processed and some of the data discarded. Aborting the Sequence using the ABTS command is not necessary and shall not be used. Both the Sequence Initiator and Recipient end the Sequence in a normal manner. See 22.5.5.3 for a description of the Stop Sequence protocol.
11b	Obsolete

12.7.11 Relative offset present

When relative offset present (bit 3) is set to one in a Data frame, the Parameter Field (see 12.13) contains the relative offset for the Payload of the frame as defined by the FC-4 protocol. Relative offset present is only meaningful on Data frames of a Sequence and shall be ignored on all other frames. Relative offset present is not meaningful on Link_Control or Basic Link Service Link Data frames. When relative offset present is set to zero on a Data frame, the value in the Parameter Field shall be passed to the upper level (e.g., for FCP-4 Task Retry Identification).

12.7.12 Exchange reassembly

The Sequence Initiator shall set the Exchange reassembly bit (bit 2) to zero to indicate that the Payload in this Data frame is associated with an Exchange between a single pair of Nx_Ports. Therefore, reassembly is confined to a single destination Nx_Port.

The Exchange reassembly bit being set to one is reserved for future use to indicate that the Payload in this Data frame is associated with an Exchange being managed by a single node using multiple Nx_Ports at either the source, destination, or both.

12.7.13 Fill Bytes

If the value of the Fill Bytes (bits 1-0) is non-zero, it notifies the Data frame receiver (Sequence Recipient) that one or more of the bytes following the Payload shall be ignored, except for CRC calculation. The number of fill bytes plus the length of the Payload in bytes shall be a multiple of four. The fill byte value is not specified by this standard.

Fill Bytes shall only be meaningful on the last Data frame of a series of consecutive Data frames of a single Information Category within a single Sequence (e.g., if a Sequence contains Data frames of a single Information Category, non-zero values Fill Bytes shall only be meaningful on the last Data frame of the Sequence). The Fill Bytes shall not be included in the Payload.

12.7.14 F_CTL bits on Data frames

Table 50 shows the interactions between specific bits within the F_CTL field. The top part of table 50 describes those bits that are unconditionally meaningful on the first, last, or any Data frame of a Sequence.

NOTE 22 - A control function may become effective when an F_CTL bit is set to one. The locations where the function is meaningful are indicated in the top part of the table 50.

The bottom part of table 50 describes those bits that are conditionally meaningful (e.g., Bit 19 set to one (column) is only meaningful on the last Data frame of a Sequence. Bit 16 set to one (column) is only meaningful on the last Data frame when bit 19 set to one).

Table 50 - F_CTL bit interactions on Data frames

Bits associated with Data frame order:	23	22	21 = 1	20 = 1	19 = 1	17 = 1	16 = 1	9 = 1	8 = 1	5- 4	3 = 1	1- 0
1st frame of Seq last frame of Seq any frame of Seq	M M M	M M M	M M M		M	M M M		M M M	M M	MF	M M M	M
First_Sequence 21 = 0 21 = 1										MF		
Last_Sequence 20 = 0 20 = 1												
End_Sequence 19 = 0 19 = 1				ML			ML					
Sequence Initiative 16 = 0 16 = 1												
Key: M = Meaningful MF = Only meaningful on first Data frame of a Sequence ML = Only meaningful on last Data frame of a Sequence												

12.7.15 F_CTL bits on Link_Control frames

Table 51 shows the interactions with F_CTL bits on ACK, BSY, and RJT frames and should be reviewed together with table 50. F_CTL bits 19 and 16 in an ACK frame are transmitted to reflect confirmation (1) or denial (0) of those indications by the Sequence Recipient (e.g., if bits 5-4 are set to 01b in response to a Data frame in which bit 19 is set one and bit 16 is set to one, setting bits 19 and 16 to zero in the ACK

frame indicates that the Data frame was not processed as the last Data frame and that Sequence Initiative was not accepted by the Sequence Recipient of the Data frame since the Sequence Recipient is requesting that the Sequence Initiator transmit an ABTS frame to Abort the Sequence). See 19.4.8, 19.4.10 and 22.5.5.2.2 for additional information on setting the Abort Sequence Condition bits.

A control function may become effective when a F_CTL bit is set to one. The locations where the function is meaningful are indicated in the top part of the table 51.

Table 51 - F_CTL bit interactions on ACK, BSY or RJT

Bits associated with ACK frame order:	23	22	21	20	19	16	9 = 1	8 = 1	5- 4	3	1- 0
ACK to 1st frame ACK to last frame ACK to any frame	V V V	V V V	E E E				M M M	M M M	Ma Ma Ma		
Exchange Context 23 = 0 23 = 1	 V V										
Sequence Context 22 = 0 22 = 1		 V V									
First_Sequence 21 = 0 21 = 1			 E E								
Last_Sequence 20 = 0 20 = 1				 E E							
End_Sequence 19 = 0 19 = 1					 E ML	 ML					
Sequence Initiative 16 = 0 16 = 1						 E ML					

Key: M = Meaningful
Ma = Meaningful only on ACK frames
ML = Meaningful only on last ACK, BSY and RJT frames of a Sequence
E = Echo (meaningful) - contains the same value as the received frame
V = Inverse or invert (meaningful) - contains the inverse of the received frame

12.8 Sequence_ID (SEQ_ID)

The SEQ_ID is a one byte field (Word 3, Bits 31-24) assigned by the Sequence Initiator. If the SEQ_ID unique per Exchange bit (see FC-LS-4) is set to zero in the PLOGI request or PLOGI LS_ACC, then the SEQ_ID shall have a value that is unique among all concurrently open Sequences between the Sequence Initiator and the Sequence Recipient, independent of the X_ID. If the SEQ_ID unique per Exchange bit is set to one in the PLOGI request and PLOGI LS_ACC, then the SEQ_ID shall have a value that is unique

among all concurrently open Sequences with the same X_ID. Both the Sequence Initiator and the Sequence Recipient track the status of frames within the Sequence using fields within the Sequence_Qualifier. If its X_ID is unassigned, it shall use any other field or fields (e.g., S_ID, D_ID, or the other Nx_Port's X_ID) for tracking (see 12.4.3, 12.4.4, 12.11 and 12.12).

If the Sequence Initiator initiates a new Sequence for an Exchange in any class of service while it already has Sequences open for that Exchange, it is termed a streamed Sequence. If streamed Sequences occur, it is the responsibility of the Sequence Initiator to use at least X+1 different SEQ_IDs before reusing a SEQ_ID, where X is the number of open Sequences per Exchange (see FC-LS-4) (e.g., if X = 2 from Login, then a series of SEQ_IDs of 11-93-22-11-93 is acceptable).

If consecutive non-streamed Sequences for the same Exchange occur during a single Sequence Initiative, it is the responsibility of the Sequence Initiator to use a different SEQ_ID for each consecutive Sequence (e.g., a series of SEQ_IDs of 21-74-21-74 is acceptable for consecutive Sequences. The examples show when a SEQ_ID is allowed to be repeated). A series of SEQ_IDs for the same Exchange may also be random and never repeat (see 19.4.4). See 19.7.3 for more discussion regarding reusing and timing out Recovery_Qualifiers following an aborted or abnormally terminated Sequence, or an aborted Exchange.

The combination of Initiator and Recipient Sequence Status Blocks identified by a single SEQ_ID describe the status of that Sequence for a given Exchange. See 19.9.2 for a description of the Sequence Status Block maintained by the Sequence Recipient.

12.9 Data Field Control (DF_CTL)

Data Field Control (DF_CTL) is a one-byte field (Word 3, Bits 23-16) that specifies the presence of optional headers at the beginning of the Data_Field. Control bit usage is shown in table 52.

Table 52 - DF_CTL bit definition

Word 3, Bit(s)	Optional Header	Applicability
23	Reserved	all frames
22	0 = Neither ESP_Header nor ESP_Trailer 1 = Both ESP_Header and ESP_Trailer	all frames
21	0 = No Network_Header 1 = Network_Header	Device_Data and Video_Data frames
20	Obsolete	
19-18	Reserved	all frames
17-16	00b = No Device_Header 01b = 16 Byte Device_Header 10b = 32 Byte Device_Header 11b = 64 Byte Device_Header	Device_Data and Video_Data frames

The Optional Headers, if present, shall be positioned in the Data_Field in the order specified with the bit 23 header as the first header in the Data_Field, bit 22 header as the second header in the Data_Field, and so forth, in a left to right manner corresponding to bits 23, 22, 21, and so forth as shown in figure 77 and figure 78.

If either bit 17 or 16 are set to one, then a Device_Header is present. The size of the Device_Header is specified by the encoded value of bits 17 and 16 as shown.

If an Optional Header is not present as indicated by the appropriate bit in DF_CTL, no space shall be allocated for the Header in the Data_Field of the frame (e.g., if bits 23 and 22 are zero and bit 21 is one, the first data byte of the Data_Field contains the first byte of the Network_Header).

See clause 14 for Optional Headers requirements.

12.10 Sequence count (SEQ_CNT)

The sequence count (SEQ_CNT) is a two-byte field (Word 3, Bits 15-0) that shall indicate the sequential order of Data frame transmission within a single Sequence or multiple consecutive Sequences for the same Exchange. The SEQ_CNT of the first Data frame of the first Sequence of the Exchange transmitted by either the Originator or Responder shall be binary zero. The SEQ_CNT of each subsequent Data frame in the Sequence shall be incremented by one.

If a Sequence is streamed, the SEQ_CNT of the first Data frame of the Sequence shall be incremented by one from the SEQ_CNT of the last Data frame of the previously sent Sequence (this is termed continuously increasing SEQ_CNT). If a Sequence is non-streamed, the starting SEQ_CNT may be continuously increasing or binary zero.

The same SEQ_ID and SEQ_CNT shall identify ACK and Link_Response frames as the frame to which it is responding. Frames are tracked on a SEQ_ID, SEQ_CNT basis within the scope of the Sequence_Qualifier for that Sequence.

The SEQ_CNT shall wrap to zero after reaching a value of 65 535. The SEQ_CNT shall then only be incremented to (but not including) the SEQ_CNT of an unacknowledged frame of the same Sequence. Otherwise, data integrity is not ensured. Sequences of Data frames and SEQ_CNT values are discussed in clause 19. In order to ensure frame identification integrity, SEQ_CNT is a 16-bit field while the End-to-end Credit field of the Login Class Service Parameters (see FC-LS-4) is defined as a 15-bit field. This ensures that EE_Credit never exceeds one-half of the maximum SEQ_CNT.

12.11 Originator Exchange_ID (OX_ID)

The Originator Exchange_ID is a two-byte field (Word 4, Bits 31-16) that shall identify the Exchange_ID assigned by the Originator of the Exchange. Each Exchange shall be assigned an identifier unique to the Originator or Originator-Responder pair. If the Originator is enforcing uniqueness via the OX_ID mechanism, it shall set a unique value for OX_ID other than FF FFh in the first Data frame of the first Sequence of an Exchange. An OX_ID of FF FFh indicates that the OX_ID is unassigned and that the Originator is not enforcing uniqueness via the OX_ID mechanism. If an Originator uses the unassigned value of FF FFh to identify the Exchange, it shall have only one Exchange (OX_ID set to FF FFh) with a given Responder.

An Originator Exchange Status Block associated with the OX_ID is used to track the progress of a series of Sequences that comprises an Exchange. See 19.9.1 for a description of the Exchange Status Block.

NOTE 23 - If FF FFh is used as the OX_ID throughout the Exchange, the Originator uses an alternate Sequence tracking mechanism. If the OX_ID is unique, it may be used as an index into a control structure that may be used in conjunction with other constructs to track frames.

12.12 Responder Exchange_ID (RX_ID)

The Responder Exchange_ID is a two byte field (Word 4, Bits 15-0) assigned by the Responder that shall provide a unique, locally meaningful identifier at the Responder for an Exchange established by an Originator and identified by an OX_ID. The Responder of the Exchange shall set a unique value for RX_ID other than FF FFh, if RX_ID is being used, by one of two methods:

a) in an ACK to a Data frame in the first Sequence of an Exchange in Class 2; or
b) in the first Sequence transmitted as a Sequence Initiator, if any, in Class 3.

An RX_ID of FF FFh shall indicate that the RX_ID is unassigned. If the Responder does not assign an RX_ID other than FF FFh by the end of the first Sequence, then the Responder is not enforcing uniqueness via the RX_ID mechanism.

When the Responder uses only FF FFh for RX_ID, it shall have the capability to identify the Exchange through the OX_ID and the S_ID of the Originator of the Exchange. Under all other circumstances, until a value other than FF FFh is assigned, FF FFh value for RX_ID shall be used indicating that RX_ID is unassigned. After a value other than FF FFh is assigned, the assigned value shall be used for the remainder of the Exchange (see 19.4.2 and 19.6.3).

A Responder Exchange Status Block associated with the RX_ID is used to track the progress of a series of Sequences that compose an Exchange. See 19.9.1 for a description of the Exchange Status Block.

NOTE 24 - If FF FFh is used as the RX_ID throughout the Exchange, the Responder uses an alternate Sequence tracking mechanism. If the RX_ID is unique, it may be used as an index into a control structure that may be used in conjunction with other constructs to track frames.

12.13 Parameter

The Parameter field (Word 5, Bits 31-0) has meanings based on frame type. For Link_Control frames, the Parameter field is used to carry information specific to the individual Link_Control frame. For Data frames with the relative offset present bit set to 1, the Parameter field specifies relative offset, a four-byte field that contains the relative displacement of the first byte of the Payload of the frame from the base address as specified by the ULP. Relative offset is expressed in terms of bytes (see 11.3.4). The use of the relative offset field is optional and is indicated as a Login Service Parameter. If relative offset is being used, the number of bytes transmitted relative to the protocol-specific base address shall be less than the maximum value of the relative offset (Parameter) field (2^{32}). For Data frames with the relative offset Present bit set to zero, the Parameter field shall be set and interpreted in a protocol specific manner that may depend on the type of Information Unit carried by the frame.

Continuously increasing relative offset is the relationship specified between relative offset values contained in frame (n) and frame (n+1) of an Information Category within a single Sequence. Continuously increasing relative offset (RO_I) for a given Information Category I is specified by the following:

$$RO_I(n+1) = RO_I(n) + \text{Length of } Payload_I(n)$$

where n is ≥ 0 and represents the consecutive frame count of frames for a given Information Category within a single Sequence. $RO_I(0)$ is the initial relative offset for the Information Category I.

See clause 21 for relative offset requirements. See clause 15 for requirements for using the Parameter field in Link_Control frames. See clause 16 for requirements for using the Parameter field in Basic Link Data frames.

13 Extended_Headers

13.1 Scope

Within the Extended_Headers, addressing information (e.g., the VF_ID in a VFT_Header) supports the functionality of the FC-2M sublevel and the FC-2V sublevel. All other Extended_Header information supports the functionality of the FC-2V sublevel.

13.2 Introduction

Extended_Headers, if present, shall immediately follow the SOF delimiter and precede the Frame_Header (see figure 71). The presence or absence of Extended_Headers in a frame shall not affect the size of the Data_Field as determined by the Buffer-to-Buffer Receive Data_Field Size negotiated at Fabric Login or N_Port Login.

Extended_Headers are used to extend the functionality provided by the Frame_Header. Extended_Headers may have different lengths, but each Extended_Header is word aligned within the frame and has a length that is a multiple of four bytes. Extended_Headers follows the general structure shown in table 53.

Table 53 - Extended_Headers General Structure

Bits Word	31 .. 24	23 .. 0
0	R_CTL	Extended_Header Specific Fields
1 .. N		

Specific Extended_Headers shall be used between FC_Ports only when negotiated. One or more Extended_Headers may be present in a single FC-2 frame. Each Extended_Header is identified by a specific value in the R_CTL field (see table 54), that specifies the Extended_Header length.

Table 54 - Extended_Headers Types

R_CTL	Description	Extended_Header Length
50h	VFT_Header (Virtual Fabric Tagging Header, see 13.3)	8 bytes
51h	IFR_Header (Inter-Fabric Routing Header, see 13.4)	8 bytes
52h	Enc_Header (Encapsulation Header, see 13.5)	24 bytes
53h .. 5Fh	Reserved	—

Devices may be required to add, delete, or modify Extended_Headers in a received FC-2 frame. Such actions require re-computation of the frame's CRC. The device shall have in place mechanisms to guarantee the integrity of the frame while the CRC is being recalculated using techniques that are beyond the scope of this standard. If a received FC-2 frame has an invalid CRC, the CRC recomputation shall not make the frame valid (e.g., the CRC of the frame may be kept invalid, the EOF may be changed to an invalid EOF delimiter (i.e., EOFni), or the frame may be discarded).

13.3 VFT_Header and Virtual Fabrics

13.3.1 Overview

The Virtual Fabric Tagging Header (VFT_Header) allows Fibre Channel frames to be tagged with the Virtual Fabric Identifier (VF_ID) of the Virtual Fabric (VF) to which they belong. Tagged frames (i.e., frames with a VFT_Header) belonging to different Virtual Fabrics may be transmitted over the same physical link (see figure 74). The VFT_Header may be supported by the Multiplexers associated with PN_Ports, PF_Ports and PE_Ports.

The use of the VFT_Header between PN_Ports and PF_Ports allows VN_Ports to share the same physical link while connected to different Virtual Fabrics, as shown in figure 74.

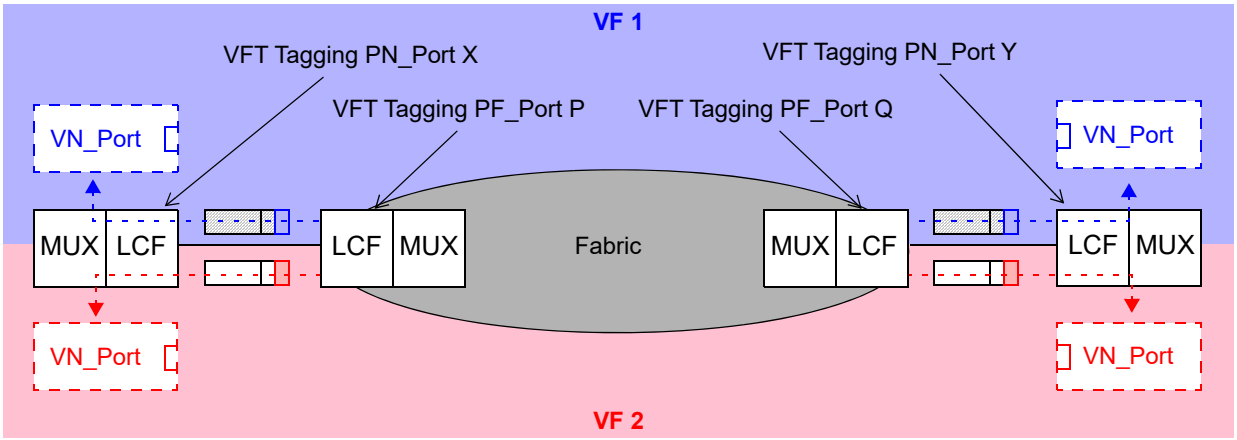

Figure 74 - VFT Tagging PN_Ports

As shown in figure 74, the Multiplexer for PN_Port X supports the VFT_Header and defines two internal VN_Ports, named A and B, respectively associated with the Virtual Fabrics having VF_ID 1 and 2. The FC-2 frames sent by VN_Port A are tagged with a VFT_Header carrying VF_ID 1 and sent to the VFT Tagging PF_Port P. The FC-2 frames sent by VN_Port B are tagged with a VFT_Header carrying VF_ID 2 and sent to the VFT Tagging PF_Port P. The VF_ID carried in the VFT_Header is used by the Multiplexer for PF_Port P to perform frame forwarding, together with the D_ID carried in the Frame_Header. In this example, VFT tagged frames are also transmitted to the destination VFT Tagging PN_Port Y by the VFT Tagging PF_Port Q. The Multiplexer for PN_Port Y uses the VF_ID carried in the VFT_Header to perform internal demultiplexing among the defined VN_Ports, and delivers the FC-2 frames to VN_Port associated with the received VF_ID and D_ID.

The use of the VFT_Header on a link shall be negotiated (see FC-LS-4 and FC-SW-7). When VFT_Header tagging is performed, all FC-2 frames on a link in both directions shall be tagged with the VFT_Header. When VFT_Header tagging is not performed, then no frame on the link, in either direction, shall contain a VFT_Header.

NOTE 25 - To maintain compatibility with existing devices, the behavior of a device erroneously receiving VFT_Header tagged frames is not defined. However, new designs should discard such frames.

When VFT tagging is enabled on a link, a Link Reset shall not change the tagging process, while a link initialization shall stop the tagging process.

Implementations may support a limited number (i.e., less than 4096) of Virtual Fabrics, but shall not limit the VF_IDs to be used.

13.3.2 VFT Tagging PN_Port Logical Model

A logical model of a VFT Tagging PN_Port is shown in figure 75.

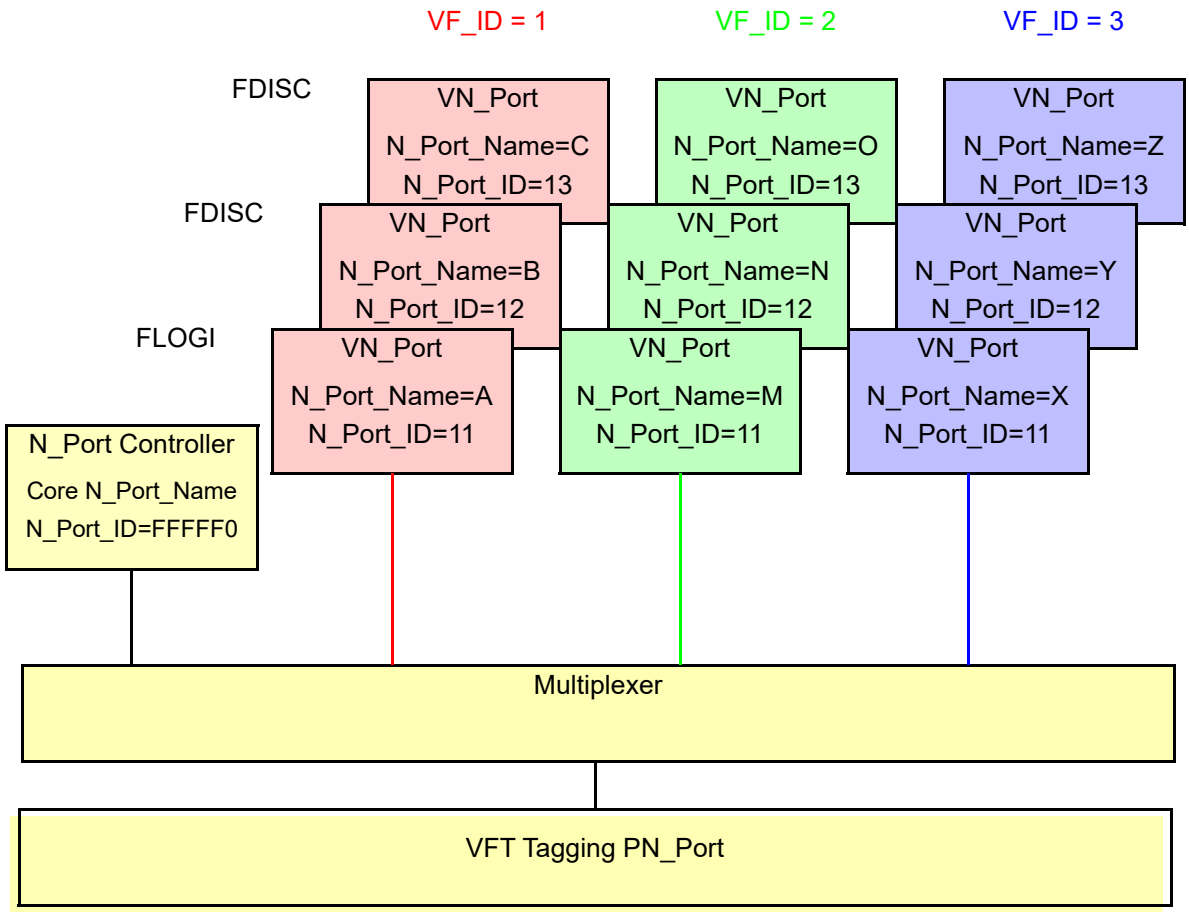

Figure 75 - Logical model of a VFT Tagging PN_Port

A VFT Tagging PN_Port is logically a collection of multiple VN_Ports communicating through the same PN_Port. There are one or more VN_Ports per each Virtual Fabric communicating through the PN_Port.

Each VN_Port is identified by a unique N_Port_Name. In addition, an additional VN_Port associated with the PN_Port is identified by the N_Port Controller N_Port_ID (e.g., FFFFF0h) and a unique Core N_Port_Name. Each Virtual Fabric is identified by a 12-bit Virtual Fabric Identifier (VF_ID).

NOTE 26 - Implementations may use the Node_Name as Core N_Port_Name, if the Node_Name is not used as N_Port_Name for any other PN_Port or VN_Port.

The Multiplexer allows sharing of a physical link across multiple Virtual Fabrics using the VFT_Header. Upon receiving a VFT tagged frame from the PN_Port, the Multiplexer delivers the frame to the appropriate VN_Port (i.e., the VN_Port associated with the Virtual Fabric whose VF_ID is carried in the VFT_Header and the D_ID in the Frame_Header).

Each VFT Tagging PN_Port shall have a configurable Port VF_ID. The Port VF_ID shall be associated with any untagged FC frame received by the VFT Tagging PN_Port. The Port VF_ID is then used by the Multiplexer to deliver the frame to the appropriate VN_Port.

13.3.3 Tagging Process

If the tagging process is performed on an untagged frame, the VFT_Header shall be applied as shown in figure 76. The Start Of Frame delimiter shall remain unchanged, and a VFT_Header shall be inserted between the SOF and the Frame_Header. The remainder of the original frame shall remain unchanged except the CRC, which shall be recalculated to also cover the VFT_Header.

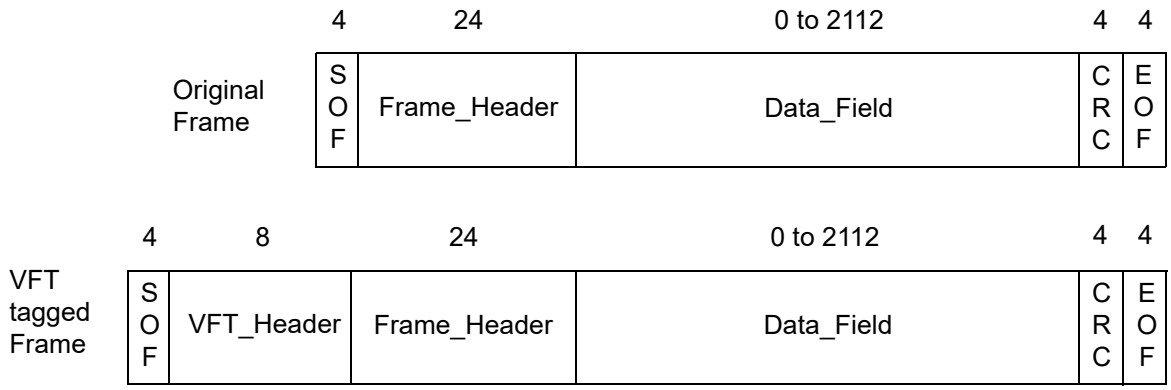

Figure 76 - The tagging process

The removal of a VFT_Header shall be performed by

1) revising the content of the frame:
   a) keeping unchanged the SOF delimiter;
   b) removing the VFT_Header; and
   c) keeping unchanged the remainder of the frame other than as required by Link-by-link ESP_Header processing (see 14.3.4);

   and
2) recomputing the CRC.

The modification of a VFT_Header shall be performed by

1) revising the content of the frame:
   a) keeping unchanged the SOF delimiter;
   b) modifying the VFT_Header; and

c) keeping unchanged the remainder of the frame other than as required by Link-by-link ESP_Header processing (see 14.3.4);

and

2) recomputing the CRC.

See 13.2 for how to perform the CRC recomputation.

13.3.4 VFT_Header Format

The format of the VFT_Header is shown in table 55.

Table 55 - VFT_Header Format

Bits Word	31 .. 24	23	22	21 .. 18	17	16	15..13	12 .. 01	0
0	R_CTL	Ver		Type	R	E	Priority	VF_ID	R
1	HopCt	Reserved							

R_CTL: shall be set to the value 50h to identify the VFT_Header Extended_Header.

Ver: specifies the version of the VFT_Header. For use according to this standard shall be set to 00b.

Type: specifies the kind of tagged frame. For use with Fibre Channel shall be set to 0h. The use of other values is beyond the scope of this standard. No device shall send a VFT tagged frame with a Type value in the VFT_Header other than 0h. A device receiving a VFT tagged frame with a Type value in the VFT_Header having a non-zero value shall discard the frame.

R: reserved. Shall be set to zero.

E: indicates whether Link-by-link ESP_Header processing is applied to the frame (see 14.3.4). If E is set to zero, Link-by-link ESP_Header processing is not applied to the frame and the VFT_Header is not followed by an ESP_Header. If E is set to one, Link-by-link ESP_Header processing is applied to the frame and the VFT_Header is followed by an ESP_Header.

Priority: specifies an optional QoS associated with the tagged frame. This field has the same format and meaning of the user_priority parameter defined in IEEE 802.1D.

VF_ID: specifies the Virtual Fabric Identifier of the Virtual Fabric to which the tagged frame belongs. Allowed values for this field are shown in table 56.

Table 56 - VF_ID Values

Value	Description
000h	Shall not be used as Virtual Fabric Identifier
001h .. EFFh	Available as Virtual Fabric Identifiers
F00h .. FEEh	Reserved
FEFh	Control VF_ID (see FC-LS-4 and FC-SW-7)
FF0h .. FFEh	Vendor Specific
FFFh	Shall not be used as Virtual Fabric Identifier

HopCt: specifies the number of remaining hops that may be traversed before the frame is discarded. A value of 00h indicates that the frame shall not be discarded due to number of hops traversed. A Switch receiving a VFT tagged frame with HopCt = 01h shall discard the frame. Each Switch, on forwarding a VFT tagged frame, shall decrement the HopCt by 1. The default initial value for the HopCt field is 16 and may be configured for each tagging port. If a frame passes from a tagging link to a second tagging link through one or more non tagging links, the HopCt value is reset to the initial value configured for the egress FC_Port attached to the second tagging link upon egress onto the second tagging link.

13.4 Inter-Fabric Routing Extended Header (IFR_Header)

13.4.1 Overview

The Inter-Fabric Routing Extended Header (IFR_Header) provides the necessary information to support fabric-to-fabric routing (see FC-IFR). The information includes:

a) the fabric identifier of the destination fabric (DF_ID);
b) the fabric identifier of the source fabric (SF_ID); and
c) information appropriate to determine the expiration time or hop count.

The IFR_Header is used at every Inter-Fabric Router to route the frame toward the destination fabric. For usage of the IFR_Header, see FC-IFR.

13.4.2 IFR_Header format

The format of the IFR_Header is shown in table 57.

Table 57 - IFR_Header format

Bits / Words	31..30	29..27	26	25	24	23..20	19..8	7..4	3..0
0	R_CTL = 51h					R	DF_ID	Exp_Time	
1	Ver	Pri	R	etv	hcv	R	SF_ID	R	Hop_Cnt

R_CTL: The Routing Control (R_CTL) field shall be set to the value 51h to identify the IFR_Header.

DF_ID: The Destination Fabric Identifier (DF_ID) field is set as specified in FC-IFR.

Ver: The Version (Ver) field specifies the version of the IFR_Header. For the format specified in table 57, the Version field shall be set to 00b.

Pri: The Priority (Pri) field specifies the Quality of Service (QoS) value for the frame (see IEEE 802.1D).

ETV: The Expiration Time Valid (ETV) bit shall be set to one if the Exp_Time field is valid. The Expiration Time Valid bit shall be set to zero if the Exp_Time field is not valid.

HCV: The Hop Count Valid (HCV) bit shall be set to one if the Hop_Cnt field is valid. The Hop Count Valid bit shall be set to zero if the Hop_Cnt field is not valid.

SF_ID: The Source Fabric Identifier (SF_ID) field is set as specified in FC-IFR.

Exp_Time: If the Expiration Time Valid (ETV) bit is set to one, the Expiration Time (Exp_Time) field is used by Inter-Fabric Routers to enforce frame lifetime requirements across the Inter-Fabric (see FC-IFR).

The Exp_Time value is the equivalent of bits 37 to 30 in the Network Time Protocol 64-bit timestamp field (see RFC 2030). This range of bits of the local clock is called the Expiration Timestamp (exp_timestamp) value. Table 58 shows where the exp_timestamp field is extracted from the Network Time Protocol 64-bit timestamp field. The exp_timestamp value has a resolution of 0.25 seconds.

Table 58 - exp_timestamp field

Bits Words	31	30	29	28	27	26	25	24	23	22	21	20	19	18	17	16	15	14	13	12	11	10	9	8	7	6	5	4	3	2	1	0
0																											exp_timest-					
1	amp																															

Hop_Cnt: If the Hop Count Valid (HCV) bit is set to one, the Hop Count (Hop_Cnt) field specifies the number of hops remaining before the frame is discarded (see FC-IFR).

R: Reserved. Shall be set to zero.

13.5 Encapsulation Extended Header (Enc_Header)

The Encapsulation Extended_Header is used to transmit frames between Inter-Fabric Routers when connected through intermediate Fabrics that do not support the IFR_Header (e.g., see FC-SW-6). To preserve backward compatibility, the Inter-Fabric Routers appear as N_Ports to the intermediate Fabrics.

The format of the Enc_Header is shown in table 59. For usage of the Enc_Header, see FC-IFR.

Table 59 - Enc_Header format

Bits Word	31 .. 24	23 .. 16	15 .. 08	07 .. 00
0	R_CTL = 52h	D_ID		
1	CS_CTL/Priority	S_ID		
2	TYPE	F_CTL		
3	SEQ_ID	DF_CTL	SEQ_CNT	
4	OX_ID		RX_ID	
5	Parameter			

The Enc_Header fields, with the exception of the Routing Control field, are identical in definition to the fields defined for the Fibre Channel Frame_Header (see clause 12).

R_CTL: The Routing Control (R_CTL) field shall be set to the value 52h to identify the Enc_Header.

14 Optional headers

14.1 Scope

Optional headers are a function of the FC-2V sublevel.

14.2 Introduction

Optional headers defined within the Data_Field of a frame are:

a) ESP_Header and ESP_Trailer;
b) Network_Header; and
c) Device_Header.

Control bits in the DF_CTL field of the Frame_Header define the presence of optional headers (see 12.9). The sum of the length in bytes of the Payload, the number of fill bytes, and the lengths in bytes of all optional headers shall not exceed 2 112. The sequential order of the optional headers, Payload, and their sizes are indicated in figure 77, figure 78, and figure 79.

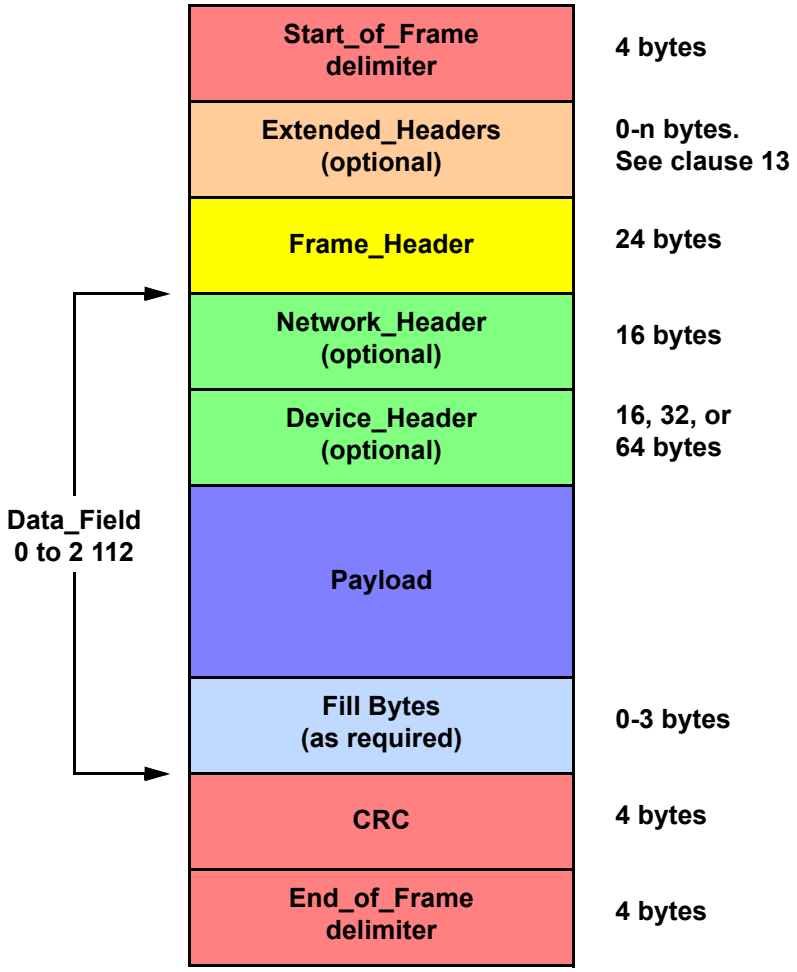

Figure 77 - Frame structure when ESP_Header is not used

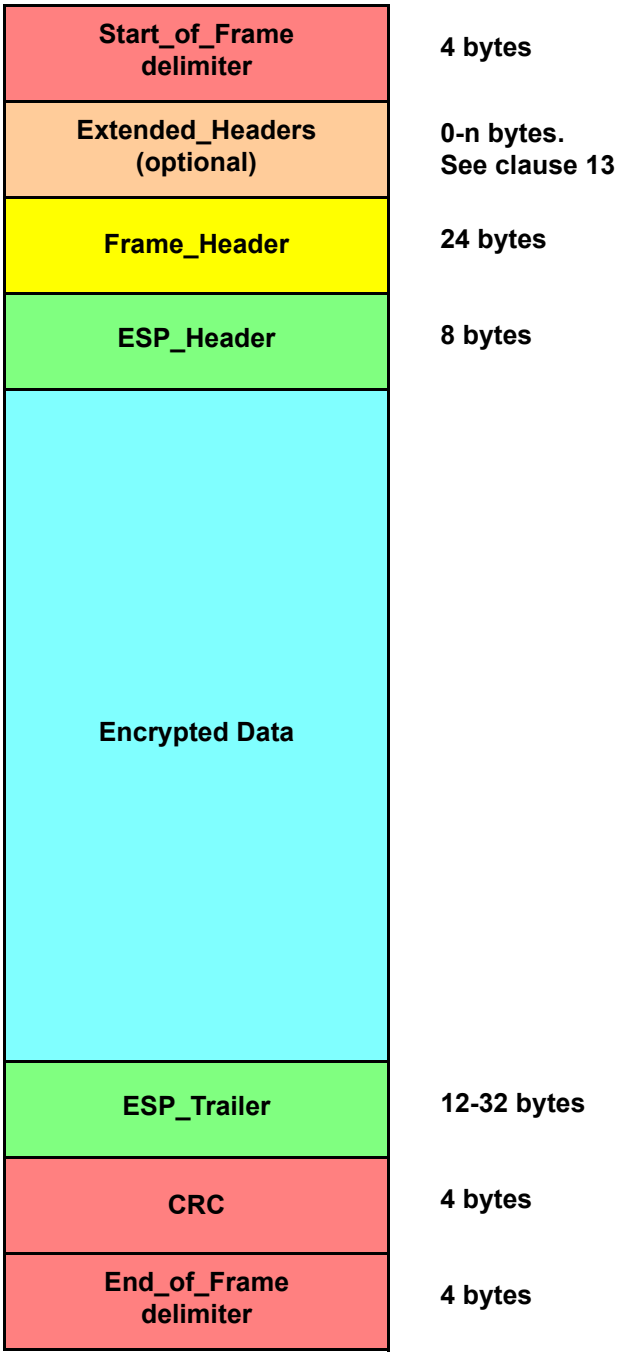

Figure 78 - Frame structure with End-to-end ESP_Header and ESP_Trailer

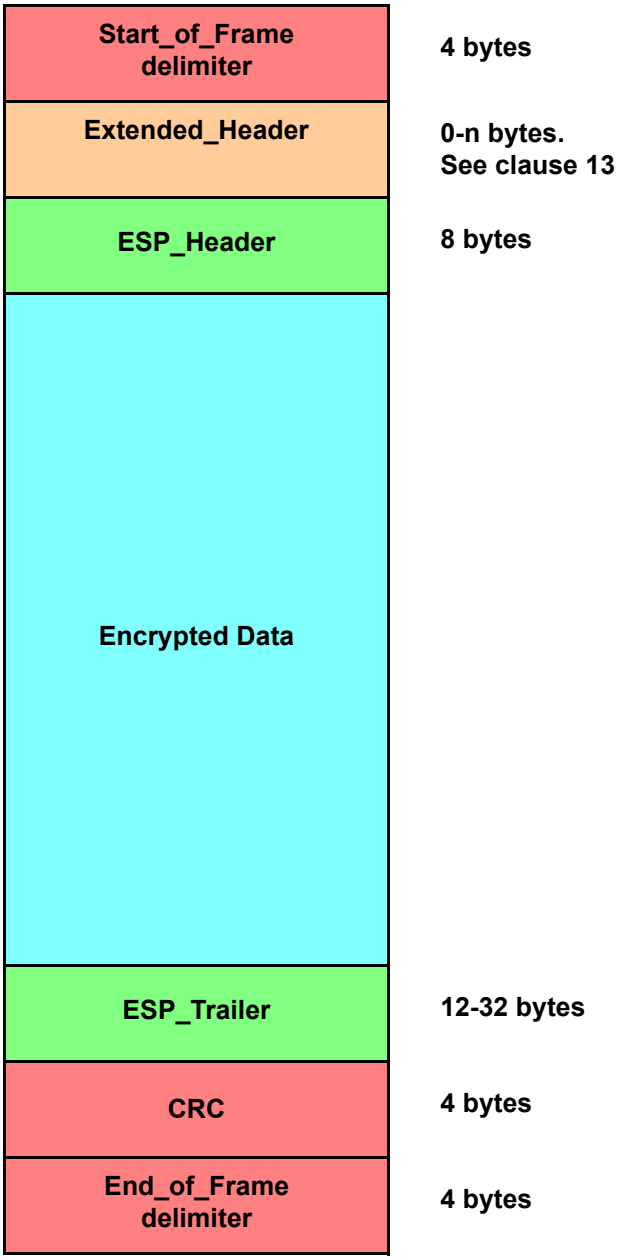

Figure 79 - Frame structure with Link-by-link ESP_Header and ESP_Trailer

Optional headers are provided for use of the FC-4 level. The use of the optional headers is not defined by this standard.

If the Payload is not a multiple of four bytes, fill bytes shall be appended to the Payload as necessary (see 12.7.13).

14.3 ESP_Header

14.3.1 Overview

The Encapsulating Security Payload (ESP) is defined in the IETF document RFC 4303. It is a generic mechanism to provide confidentiality, data origin authentication, and anti-replay protection to IP packets. FC-SP-2 defines how to use ESP in Fibre Channel, including any negotiation procedure, additional encryption/authentication algorithm and processing requirements. This clause defines the structure of a Fibre Channel frame conveying an ESP_Header.

End-to-end ESP_Header processing shall be applied to FC frames in transport mode (see RFC 4303), and Link-by-link ESP_Header processing shall be applied to FC frames in tunnel mode (see RFC 4303). The Authentication option shall be used, Confidentiality may be negotiated by the two communicating FC_Ports (see FC-SP-2).

ESP_Header processing may be applied End-to-end, Link-by-link, or both. End-to-end ESP_Header processing is indicated in the Frame_Header of the frame, is applied by the Nx_Port identified in the S_ID of the frame, and is removed by the Nx_Port identified in the D_ID of the frame. Link-by-link ESP_Header may be indicated in an Extended_Header of the frame, is applied to a frame at the transmitting end of a link, and removed at the receiving end of the link.

NOTE 27 - An intended application of Link-by-link ESP_Header processing is to secure a link in a Fabric or between Fabrics without requiring use of ESP by every Nx_Port.

This specification adheres to RFC 4303 except for the ICV coverage. Variations of ICV coverage are defined for each header in which a Fibre Channel ESP_Header is indicated.

14.3.2 Application of End-to-end ESP_Header processing

Table 60 shows the format of an FC frame to which End-to-end ESP_Header processing is applied. Presence of an End-to-end ESP_Header is indicated in the DF_CTL field of the Frame_Header. A sender shall apply End-to-end ESP_Header processing to an FC frame as follows:

1) Compute the ODP CRC if the feature is enabled (see 14.3.5);
2) Add a fixed length ESP_Header (8 bytes) following the Frame_Header, specifying a Security Parameter Index (SPI) and an ESP Sequence Number;
3) Pad the concatenation of any other optional headers, the Payload, and any required fill bytes to the block size required by the negotiated encryption/authentication algorithms. The Pad Length field shall contain the length of this ESP padding, if ODP is enabled, place the CRC calculated in 1) into the ESP padding (see 14.3.5);
4) Apply the negotiated encryption algorithm to the data resulting from item 3);
5) Compute an Integrity Check Value (ICV), using the negotiated authentication algorithm and parameters, covering:
   i) the Frame_Header, with the S_ID, D_ID, and CS_CTL/Priority fields set to zero for the purpose of the ICV computation;
   ii) the ESP_Header; and
   iii) the data resulting from item 4);

   and
6) Add an ESP_Trailer containing the ICV computed in item 5). The length of the ESP_Trailer shall be negotiated (see FC-SP-2) and shall be a multiple of 32 bits.

NOTE 28 - In step 5), the CS_CTL/Priority field is excluded because it is a mutable field, and the S_ID field and D_ID field are excluded to permit address translation.

A receiver shall apply End-to-end ESP_Header processing to an FC frame as follows:

1) Check the ESP_Header, using the SPI to retrieve the negotiated parameters required to interpret the received FC frame, and the ESP Sequence Number to avoid replay attacks (see RFC 4303). The length of the ESP_Trailer is one of the retrieved parameters;
2) Compute an ICV, using the retrieved parameters, covering:
   i) the Frame_Header, with the S_ID, D_ID, and CS_CTL/Priority fields set to zero for the purpose of the ICV computation;
   ii) the ESP_Header; and
   iii) the encrypted data;
3) Check the computed ICV with the content of the ESP_Trailer. If they are equal the authentication is successful, otherwise not;
4) Apply the negotiated decryption algorithm to the encrypted data;
5) Remove the ESP padding and process the resulting optional headers, Payload, and fill bytes that are present; and
6) Check the ODP CRC against the decrypted data if the feature is enabled (see 14.3.5).

Processing of the ESP_Header and ESP_Trailer shall be performed before removing any fill bytes determined by the F_CTL Fill Bytes field in the Frame_Header.

The End-to-end ESP_Header processing shall be transparent to the FC-4. On the sending side the End-to-end ESP_Header processing shall be applied to every frame of a sequence to be protected. On the receiving side, the End-to-end ESP_Header processing shall be applied to every frame that carries an ESP_Header, and only after that the sequence shall be reassembled and sent to the FC-4.

The ESP_Header and ESP_Trailer, if used, shall be present in every frame of a Sequence. If the receiving FC_Port does not support the ESP_Header function, it shall discard the FC frame.

Table 60 - End-to-end ESP_Header and ESP_Trailer

Word \ Bits	31 .. 24	23 .. 16	15 .. 08	07 .. 00
0	R_CTL	D_ID		
1	CS_CTL / Priority	S_ID		
2	TYPE	F_CTL		
3	SEQ_ID	DF_CTL	SEQ_CNT	
4	OX_ID		RX_ID	
5	Parameter			
6	Security Parameter Index (SPI)			
7	ESP Sequence Number			
8 .. M	Other Optional Headers (if present)			
M+1 .. N	Payload (variable length)			
		Fill Bytes (if present)		
N+1 .. P	ESP Padding (2-254 bytes)			
			Pad Length	Not meaningful
P+1 .. Q	Integrity Check Value			
Q+1	CRC			

NOTE 1 The D_ID, S_ID, and CS_CTL/Priority fields zeroed for the purposes of ICV computation.
NOTE 2 The ESP_Header consists of words 6 and 7.
NOTE 3 The ESP_Trailer consists of words P+1 through Q.
NOTE 4 Confidentiality covers words 8 through P.
NOTE 5 Authentication covers words 0 through P.
NOTE 6 Other Optional Headers are possibly present in words 8 to M as specified in 12.9.

14.3.3 Application of Link-by-link ESP_Header processing to a frame with an Enc_Header

Table 61 shows the format of an FC frame with an Enc_Header (see 13.5) to which Link-by-link ESP_Header processing is applied. In an Enc_Header carrying a Link-by-Link ESP_Header:

a) the D_ID and S_ID fields shall be set to FFFFFDh for an E_Port to E_Port link;
b) the D_ID field shall be set to FFFFFEh and S_ID field shall be set to FFFFF0h for an N_Port to F_Port link; and

c) the D_ID field shall be set to FFFFF0h and S_ID field shall be set to FFFFFEh for an F_Port to N_Port link.

Link-by-link ESP_Header processing is indicated in the DF_CTL field of an Enc_Header. If the ESP bit is set to one in the DF_CTL field of an Enc_Header, no bits shall be set to one other than the ESP bit. A sender shall apply Link-by-link ESP_Header processing to an FC frame with an Enc_Header as follows:

1) Add a fixed length ESP_Header (8 bytes) following the Enc_Header, specifying a Security Parameter Index (SPI) and an ESP Sequence Number;
2) Pad the concatenation of any other Extended_Headers, the Frame_Header, any optional headers in the frame content, the Payload, and any required fill bytes to the block size required by the negotiated encryption/authentication algorithms. The Pad Length field shall contain the length of this ESP padding;
3) Apply the negotiated encryption algorithm to the data resulting from item 2);
4) Compute an Integrity Check Value (ICV), using the negotiated authentication algorithm and parameters, covering:
   i) the Enc_Header, with the S_ID, D_ID, and CS_CTL/Priority fields unchanged for the purpose of the ICV computation;
   ii) the ESP_Header; and
   iii) the data resulting from item 3);

   and
5) Add an ESP_Trailer containing the ICV computed in item 4). The length of the ESP_Trailer shall be negotiated (see FC-SP-2) and shall be a multiple of 32 bits.

A receiver shall apply Link-by-link ESP_Header processing to an FC frame with an Enc_Header as follows:

1) Check the ESP_Header, using the SPI to retrieve the negotiated parameters required to interpret the received FC frame, and the ESP Sequence Number to avoid replay attacks (see RFC 4303). The length of the ESP_Trailer is one of the retrieved parameters;
2) Compute an ICV, using the retrieved parameters, covering:
   i) the Frame_Header, with the S_ID, D_ID, and CS_CTL/Priority fields unchanged for the purpose of the ICV computation;
   ii) the ESP_Header; and
   iii) the encrypted data;
3) Check the computed ICV with the content of the ESP_Trailer. If they are equal the authentication is successful, otherwise not;
4) Apply the negotiated decryption algorithm to the encrypted data; and
5) Remove the ESP padding and process the resulting other Extended_Headers if any, the Frame_-Header, any optional headers in the frame content, Payload, and fill bytes that are present.

On the sending side the Link-by-link ESP_Header processing shall be applied to every frame to be protected. On the receiving side, the Link-by-link ESP_Header processing shall be applied to every frame that carries an ESP_Header in which the presence of an ESP_Header is indicated in the DF_CTL field. Frames that are not successfully authenticated may be discarded.

If the receiving FC_Port does not support the ESP_Header function, it shall discard the FC frame.

Table 61 - Link-by-link ESP_Header and ESP_Trailer in a frame with an Enc_Header

Word \ Bits	31 .. 24	23 .. 16	15 .. 08	07 .. 00
0	R_CTL = 52h	D_ID		
1	CS_CTL / Priority	S_ID		
2	TYPE	F_CTL		
3	SEQ_ID	DF_CTL	SEQ_CNT	
4	OX_ID		RX_ID	
5	Parameter			
6	Security Parameter Index (SPI)			
7	ESP Sequence Number			
8	R_CTL	D_ID		
9	CS_CTL / Priority	S_ID		
10	TYPE	F_CTL		
11	SEQ_ID	DF_CTL	SEQ_CNT	
12	OX_ID		RX_ID	
13	Parameter			
14 .. M	Optional Headers (if present)			
M+1 .. N	Payload (variable length)			
		Fill Bytes (if present)		
N+1 .. P	ESP Padding (2-254 bytes)			
			Pad Length	Not meaningful
P+1 .. Q	Integrity Check Value			
Q+1	CRC			

NOTE 1 The ESP_Header consists of words 6 and 7.
NOTE 2 The ESP_Trailer consists of words P+1 through Q.
NOTE 3 Confidentiality covers words 8 through P.
NOTE 4 Authentication covers words 0 through P.
NOTE 5 Other Extended_Headers are possibly present in words 8 to M as specified in clause 13.

14.3.4 Application of Link-by-link ESP_Header processing to a frame with a VFT_Header

Table 62 shows the format of an FC frame with a VFT_Header (see 13.3) to which Link-by-link ESP_Header processing is applied. Link-by-link ESP_Header processing is indicated in the E field of a VFT_Header. A sender shall apply Link-by-link ESP_Header processing to an FC frame with a VFT_Header as follows:

1) Add a fixed length ESP_Header (8 bytes) following the VFT_Header, specifying a Security Parameter Index (SPI) and an ESP Sequence Number;
2) Pad the concatenation of any other Extended_Headers, the Frame_Header, any optional headers in the frame content, the Payload, and any required fill bytes to the block size required by the negotiated encryption/authentication algorithms. The Pad Length field shall contain the length of this ESP padding;
3) Apply the negotiated encryption algorithm to the data resulting from item 2);
4) Compute an Integrity Check Value (ICV), using the negotiated authentication algorithm and parameters, covering:
   i) the VFT_Header;
   ii) four words of zeros that are not transmitted;
   iii) the ESP_Header; and
   iv) the data resulting from item 3);

   and
5) Add an ESP_Trailer containing the ICV computed in item 4). The length of the ESP_Trailer shall be negotiated (see FC-SP-2) and shall be a multiple of 32 bits.

NOTE 29 - In step 4, four words of zeros that are not transmitted are included in the ICV computation to facilitate common hardware implementations of all applications of Fibre Channel ESP.

A receiver shall apply Link-by-link ESP_Header processing to an FC frame with a VFT_Header as follows:

1) Check the ESP_Header, using the SPI to retrieve the negotiated parameters required to interpret the received FC frame, and the ESP Sequence Number to avoid replay attacks (see RFC 4303). The length of the ESP_Trailer is one of the retrieved parameters;
2) Compute an ICV, using the retrieved parameters, covering:
   i) the received VFT_Header;
   ii) four words of zeros that are not received;
   iii) the ESP_Header; and
   iv) the encrypted data;
3) Check the computed ICV with the content of the ESP_Trailer. If they are equal the authentication is successful, otherwise not;
4) Apply the negotiated decryption algorithm to the encrypted data; and
5) Remove the ESP padding and process the resulting other Extended_Headers if any, the Frame_-Header, any optional headers in the frame content, Payload, and fill bytes that are present.

On the sending side the Link-by-link ESP_Header processing shall be applied to every frame to be protected. On the receiving side, the Link-by-link ESP_Header processing shall be applied to every frame that carries an ESP_Header in which the E bit is set to one. Frames that are not successfully authenticated may be discarded.

If the receiving FC_Port does not support the ESP_Header function, it shall discard the FC frame.

Table 62 - Link-by-link ESP_Header and ESP_Trailer in a frame with a VFT_Header

Bits Word	31 .. 24	23	22	21 .. 18	17	16	15..13	12 .. 8	7-1	0
0	R_CTL	Ver		Type	R	1	Priority	VF_ID		R
1	HopCt	Reserved								
	00 00 00 00h (see NOTE 1)									
	00 00 00 00h (see NOTE 1)									
	00 00 00 00h (see NOTE 1)									
	00 00 00 00h (see NOTE 1)									
2	Security Parameter Index (SPI)									
3	ESP Sequence Number									
4	R_CTL	D_ID								
5	CS_CTL / Priority	S_ID								
6	TYPE	F_CTL								
7	SEQ_ID	DF_CTL					SEQ_CNT			
8	OX_ID						RX_ID			
9	Parameter									
10 .. M	Optional Headers (if present)									
M+1 .. N	Payload (variable length)									
		Fill Bytes (if present)								
N+1 .. P	ESP Padding (2-254 bytes)									
							Pad Length		Not meaningful	
P+1 .. Q	Integrity Check Value									
Q+1	CRC									

NOTE 1 Four words of zero are appended to the VFT_Header for the purposes of ICV computation but are not transmitted or received.
NOTE 2 The ESP_Header consists of words 2 and 3.
NOTE 3 The ESP_Trailer consists of words P+1 through Q.
NOTE 4 Confidentiality covers words 4 through P.
NOTE 5 Authentication covers words 0 through P.
NOTE 6 Other Extended_Headers are possibly present in words 4 to M as specified in clause 13.

14.3.5 Overlapping Data Protection (ODP)

14.3.5.1 Overview

This sub-clause defines an optional mechanism for providing end-to-end data integrity protection while ESP encryption is enabled. The purpose of this mechanism is to provide for method of detecting bit errors introduced during the encryption/decryption process.

For ODP, there are the following components:

a) During Security Association negotiation, use of the ENCR_AES_GCM_ODP or ENCR_AES_AUTH_AES_GMAC_ODP Encryption Algorithms Transform_IDs indicates support of the feature (see FC-SP-2 AM2);
b) a 16-bit CRC is put in place of the first 16 bytes of the ESP Padding (see 14.3.5.2); and
c) processing rules for the ESP Padding CRC (see 14.3.5.3).

ESP End-to-end Protection is defined for the End-to-end ESP_Header (see 14.3.2).

14.3.5.2 ESP Padding CRC Placement

The format of the ESP Padding field when the ODP feature is enabled is shown in table 63.

Table 63 - ESP Padding field when ESP End-to-end protection enabled

Bits / Word	31 .. 24	23 .. 16	15 .. 08	07 .. 00
0	ESP Padding CRC			
..	ESP Padding (0-252 bytes)			
P			Pad Length	Not meaningful

ESP Padding CRC: When the ODP feature is enabled, the ESP Padding CRC shall replace the first 16 bits of the ESP Padding field (see 14.3.5.3).

ESP Padding: If there are more than two ESP Padding bytes, this field shall be set as defined in RFC 4303. As specified by RFC 4303, an increasing count is placed in each byte of the ESP Padding. If there are any ESP Padding field bytes beyond two, the count shall start at 03h (i.e., the CRC replaces the first two bytes of the padding field which are defined to have the values 01h and 02h respectively).

Pad Length: The total length, in bytes, of the ESP Padding field including the ESP Padding CRC.

14.3.5.3 ESP End-to-end protection processing

After building a frame for transmission, but before encrypting the data (see 14.3.2), the transmitting port shall:

1) Compute CRC, using the T10 Protection Information CRC (see SBC-5), covering:
   i) the Frame_Header, with the S_ID, D_ID, and CS_CTL/Priority fields set to zero for the purpose of the CRC computation;
   ii) optional headers other than the ESP_Header, if present; and
   iii) the Payload; and
2) place the computed CRC into the first 2 bytes of the ESP Padding field (see 14.3.5.2).

After decrypting the received data (see 14.3.2), the receiving port shall:

1) Compute CRC, using the T10 Protection Information CRC (see SBC-5), covering:
   i) the Frame_Header, with the S_ID, D_ID, and CS_CTL/Priority fields set to zero for the purpose of the CRC computation;
   ii) optional headers other than the ESP_Header, if present; and
   iii) the Payload; and
2) compare the CRC computed in 1) with the CRC received in the first 2 bytes of the ESP Padding field (see 14.3.5.2), if the values don't match an error should be indicated.

NOTE 30 - The mechanism by which a CRC mismatch is indicated is outside the scope of this standard.

14.4 Network_Header

A bridge or a gateway node that interfaces to an external Network may use the Network_Header. The Network_Header, if present, shall be 16 bytes in size.

The Network_Header, as shown in table 64, is an optional header within the Data_Field content. Its presence shall be indicated by bit 21 in the DF_CTL field being set to one. The Network_Header may be used for routing between Fibre Channel networks of different Fabric address spaces, or Fibre Channel and non-Fibre Channel networks. The Network_Header contains Name_Identifiers for Network_Destination_Address and Network_Source_Address. See clause 18 for the definition of these fields.

Table 64 - Network_Header

Bits Word	31 .. 28	23 .. 00
0	D_NAA	Network_Destination_Address (high order bits)
1	Network_Destination_Address (low order bits)	
2	S_NAA	Network_Source_Address (high order bits)
3	Network_Source_Address (low order bits)	

The Network_Header, if used, shall be present only in the first Data frame of a Sequence. If the receiving Nx_Port does not support the header function, it shall ignore the header and skip the Data_Field by the header length (16 bytes). Destination Network_Address_Authority (D_NAA) or Source Network_Address_Authority (S_NAA) field indicates the format of the Name_Identifier used for the network address. See clause 18 for a description of the Name_Identifier formats.

14.5 Device_Header

14.5.1 Overview

The Device_Header, if present, shall be 16, 32, or 64 bytes in size. The contents of the Device_Header are controlled at a level above FC-2 based on the TYPE field (see 12.6).

The Device_Header, if present, shall be present either in the first Data frame or in all Data frames of a Sequence. ULP types may use a Device_Header, requiring the Device_Header to be supported. The Device_Header may be ignored and skipped, if not needed. If a Device_Header is present for a ULP that does not require it, the related FC-4 may reject the frame with the reason code of “TYPE not supported”.

14.5.2 Application_Header

The Application_Header is constructed as a 16 byte Device_Header. The Application_Header, if present, shall be present in all Data frames of a Sequence. The Application_Header may be present on some Sequences of an Exchange, and not present on other Sequences of an Exchange. Application identifiers are allocated by the Application Server (see FC-GS-8).

An FC_Port indicates Application_Header support via the Application Header Support bit in the login Common Service Parameters (see FC-LS-4).

The format of the Application_Header is specified in table 65.

Table 65 - Application_Header

Bits Word	31 .. 00
0	Destination Application Identifier
1	Source Application Identifier
2	Reserved
3	Reserved

Source Application Identifier: contains an identifier specific to the source application.

Destination Application Identifier: contains an identifier specific to the destination application.

If an Application_Header is present, then for each Data frame in a Sequence an FC_Port shall set the Destination Application Identifier field to:

a) the last Source Application Identifier field value received in a previous Sequence for the Exchange; or
b) an application identifier value (see FC-GS-8).

If an Application_Header is present, then for each Data frame in the Sequence an FC_Port shall set the Source Application Identifier field to:

a) the last Destination Application Identifier field value received in a previous Sequence for the Exchange; or
b) an application identifier value (see FC-GS-8).

15 Data frames and responses

15.1 Scope

Data frames and responses are functions of the FC-2V sublevel.

15.2 Data frames

15.2.1 Introduction

When the term Data frame is used in this standard, it refers to any of the types of Data frames that may be transmitted.

Data frames may be used to transfer information (e.g., data, control, and status information from a source Nx_Port to a destination Nx_Port). In Class 2, each Data frame successfully transmitted shall be acknowledged to indicate successful delivery to the destination Nx_Port. An indication of unsuccessful delivery of a valid frame shall be returned to the transmitter by a Link_Response frame in Class 2.

Data frames may be streamed, (i.e., a single Nx_Port may transmit multiple frames before a response frame is received). The number of outstanding, unacknowledged Data frames allowed is specified by a Class Service Parameter during the Login protocol (see 4.10.5) (Nx_Port End-to-end Credit). See FC-LS-4 for the specification of Login and Service Parameters and clause 20 for the specification of flow control rules.

A set of one or more Data frames, related by the same SEQ_ID transmitted unidirectionally from one Nx_Port to another Nx_Port, is called a Sequence.

Regardless of the error policy, a Class 2 Data frame shall be retransmitted, only in response to a corresponding Busy (F_BSY, P_BSY) frame. Except as above, Data frame recovery shall be by means of Sequence retransmission under the control of FC-4. See 22.5.4.4, 22.5.4.5 and 22.5.5, respectively, for Sequence integrity, Sequence error detection, and Sequence recovery requirements.

Each Data frame within a Sequence shall be transmitted within an E_D_TOV timeout period to avoid timeout errors at the destination Nx_Port.

15.2.2 Frame Delimiters

Table 66 specifies, by class, the allowable frame delimiters for Data frames (see 11.3.7 and 11.3.8).

Table 66 - Allowable Data frame delimiters

Data frame	Delimiters
Class 2	SOF_{i2}, SOF_{n2}, EOF_n
Class 3	SOF_{i3}, SOF_{n3}, EOF_n, EOF_t

15.2.3 Addressing

The S_ID field designates the source Nx_Port of the Data frame. The D_ID field designates the destination Nx_Port of the Data frame.

15.2.4 Data_Field

The Data_Field is a multiple of four bytes and variable in length. The Data_Field may contain optional headers whose presence is indicated by the DF_CTL field in the Frame_Header (see clause 14).

In order to accommodate message content within the Payload that is not a multiple of four bytes, fill bytes shall be appended to the end of the Payload. The number of fill bytes plus the length of the Payload in bytes shall be a multiple of four. The number of fill bytes is specified by F_CTL bits 1-0 (see 12.7) and shall only be meaningful on the last frame of an instance of an Information Category. The fill byte value is not specified by this standard. Any field that follows the fill bytes shall be a multiple of four bytes in length (see 14.3).

15.2.5 Payload size

The Payload size is determined by the number of bytes between the SOF and EOF minus the 24-byte Frame_Header, any Optional Headers, the fill bytes (0, 1, 2, or 3) and the CRC.

15.2.6 Responses

15.2.6.1 Introduction

Responses to Data frames are called Link_Control response frames (see 15.3). There are two types:

a) ACK frames - ACK_0 and ACK_1; and
b) Link_Response frames - P_BSY, P_RJT, F_BSY, and F_RJT.

All Link_Control response frames shall be transmitted in the same class as the frame to which it is responding.

15.2.6.2 ACK frames - successful Data frame delivery

Table 67 defines what ACK frames shall be used for each class for successful Data frame delivery.

Table 67 - ACK Frames by Class

Data frame	ACK
Class 2	ACK_0, ACK_1
Class 3	No Response

15.2.6.3 Link_Response frames - Unsuccessful Data frame delivery

Table 68 defines what RJT or BSY frames shall be used for each class for unsuccessful Data frame delivery.

Table 68 - Link_Response Frames by Class

Data frame	ACK
Class 2	F_BSY (Fabric Busy) P_BSY (Nx_Port Busy) F_RJT (Fabric Reject) P_RJT (Nx_Port Reject)
Class 3	No Response

15.3 Link_Control Frames

15.3.1 Introduction

Link_Control frames (ACK and Link_Response frames) shall be used by the Nx_Port to control Class 2 frame transfers.

ACK and Link_Response frames indicate successful or unsuccessful frame delivery of a valid frame to the FC-2V sublevel in Nx_Ports. The ACK and Link_Response frames also participate in end-to-end flow control. ACK frames shall indicate successful delivery to the destination Nx_Port, while Link_Response frames shall indicate unsuccessful delivery to the Fabric and Nx_Port.

Link_Control frames are identified by the ROUTING field being set to Ch and the INFORMATION field as shown in table 69.

Table 69 - Link_Control Information Categories

ROUTING	INFORMATION	Description	Abbr.
Ch	0h	Acknowledge_1	ACK_1
	1h	Acknowledge_0	ACK_0
	2h	Nx_Port Reject	P_RJT
	3h	Fabric Reject	F_RJT
	4h	Nx_Port Busy	P_BSY
	5h	Fabric Busy to Data frame	F_BSY
	6h	Fabric Busy to Link_Control frame	F_BSY
	7h	Link Credit Reset	LCR
	8h	Notify - obsolete	NTY
	9h	End - Obsolete	END
	others	reserved	

The Parameter field is reserved except for ACK_1 (see 15.3.2.2.2) and ACK_0 (see 15.3.2.2.3).

The TYPE field for Link_Control frames other than F_BSY shall be reserved.

The DF_CTL field for a Link_Control frame shall be set to 00h or to 40h.

An Nx_Port shall provide sufficient resources to receive Link_Control frames in response to Data frames it originated. An Nx_Port shall not transmit P_BSY in response to Link_Control frames

NOTE 31 - It is not necessary to save information in order to retransmit a Link_Control frame since F_BSY to a Link_Control frame contains all information required to retransmit and P_BSY is not allowed for Link_Control frames.

LCR (see 15.3.4.2) may always be retransmitted in response to an F_BSY. For ACK and RJT frames, see individual commands for any restrictions on frame retransmission in response to F_BSY. Link_Control frames shall be transmitted within an E_D_TOV timeout period of the event that causes transmission of the Link_Control frame.

Table 70 indicates allowable delimiters for Class 2 Link_Control frames.

Table 70 - Link_Control frame delimiters

Frame	Delimiters
ACK, BSY, RJT	SOF_{n2}, EOF_n, EOF_t
LCR	SOF_{n2}, EOF_n

15.3.2 Link_Continue function

15.3.2.1 Introduction

The Link_Continue function provides a positive feedback mechanism to control the end-to-end flow of Data frames on the link. A Data frame shall only be transmitted when the applicable Nx_Port has indicated that a buffer is available for frame reception. The following list specifies flow control elements:

a) ACK_0 - successful or unsuccessful delivery of a Sequence (see 15.3.2.2) between Initiator and Recipient Nx_Ports, with or without a Fabric present. ACK_0 is only applicable to Class 2 frames; and
b) ACK_1 - end-to-end flow control for a single Data frame transfer between Initiator and Recipient Nx_Ports with or without a Fabric present. The ACK_1 frame is transmitted on receipt of a Class 2 frame. An FC_Port should transmit R_RDY and Link_Control frames before Data frames in order to avoid buffer-to-buffer and end-to-end Credit problems.

15.3.2.2 Acknowledge (ACK)

15.3.2.2.1 General

ACK_0 or ACK_1 may be used for acknowledgment of Data frames between Initiator and Recipient Nx_Ports for a given Sequence, but usage shall follow the allowable forms based on support defined in Login. Prior to N_Port Login, ACK_1 shall be used. Following N_Port Login, the decision to use ACK_0 or ACK_1 shall be made based on the results of N_Port Login.

The ACK frame shall indicate that one or more valid Data frames were received by the destination Nx_Port for the corresponding Sequence_Qualifier and SEQ_CNT of a valid Exchange as specified in the Sequence_Qualifier, and that the interface buffers that received the frame or frames are available for further frame reception. ACK frames shall be used in Class 2, and transmitted in the same class as the Data frame or frames that are being acknowledged.

When multiple ACK forms are supported by both the Sequence Initiator N_Port Login parameters and the Sequence Recipient N_Port Login parameters, ACK_0 usage shall take precedence over ACK_1. ACK_1 shall be the default, if both ends support no other ACK form. Mixing ACK forms within a given Sequence is not allowed (i.e., only one ACK form shall be used within a single Sequence). ACK precedence is summarized in table 71.

Table 71 - ACK precedence

Sequence Recipient word 1, bit 31 (ACK_0 Capable)	Sequence Initiator word 0, bit 11 (ACK_0 Capable)	ACK form required
0	0	ACK_1
0	1	ACK_1
1	0	ACK_1
1	1	ACK_0

For all forms of ACK, when the History bit (bit 16) of the Parameter Field is set to zero, it shall indicate that the Sequence Recipient has transmitted all previous ACKs (i.e., lower SEQ_CNT), if any, for this Sequence. When the History bit (bit 16) of the Parameter Field is set to one, it shall indicate that at least one previous ACK has not been transmitted (e.g., Data frame not processed, or Data frame not received) by the Sequence Recipient. Using this historical information allows an Nx_Port to reclaim end-to-end Credit for a missing ACK frame.

Being able to reclaim end-to-end Credit does not relieve the Nx_Port of accounting for all ACK frames of a Sequence in Class 2. ACK frames shall not be retransmitted in response to an F_BSY (Class 2). The F_BSY frame to an ACK shall be discarded.

Support for ACK_0 may not be symmetrical for a single Nx_Port as a Sequence Initiator and Sequence Recipient (see FC-LS-4).

NOTE 32 - Throughout this standard, ACK refers to one of the two forms (ACK_1 or ACK_0) and although there are two command codes in R_CTL, the Parameter Field History bit (bit 16) and ACK_CNT (bits 15-0) are used in a consistent manner.

The ACK frame provides end-to-end flow control for one or more Data frames between Initiator and Recipient Nx_Ports as defined in ACK_0 or ACK_1. See 20.3.3.3 for usage rules. A specific Data frame shall be acknowledged once and only once. ACK reception does not imply Data delivery to a higher level.

15.3.2.2.2 ACK_1

All Nx_Ports, as the default, prior to Login shall support ACK_1. The SEQ_CNT of the ACK_1 shall match the single Data frame being acknowledged. If an Nx_Port only supports ACK_0, it shall Logout any Nx_Port that attempts to Login that does not support ACK_0. The Parameter Field contains a value of 0001h in ACK_CNT (bits 15-0) to indicate that a single Data frame is being acknowledged. The INFORMATION field (Word 0, bits 27-24) shall be set to 0h.

15.3.2.2.3 ACK_0

ACK_0 is the designation used when the ACK_CNT (bits 15-0) of the Parameter Field of the ACK_0 frame contains a value 0000h to indicate that all Data frames of a Sequence are being acknowledged. The SEQ_CNT of the ACK_0 shall match the SEQ_CNT of the last Data frame received within the Sequence. The INFORMATION field (Word 0, bits 27-24) shall be set to 1h.

The ACK_0 frame may be used for both Discard and Process Exchange Error Policies. For both policy types, ACK_0 support as indicated by Login also specifies that infinite buffering shall be used.

When multiple ACK forms are supported by both Sequence Initiator N_Port Login parameters and the destination Nx_Port Sequence Recipient N_Port Login parameters, ACK_0 usage shall take precedence over ACK_1. ACK_1 shall be the default, if both ends support no other common ACK form.

If both Sequence Initiator and Sequence Recipient support ACK_0, a single ACK_0 per Sequence shall be used to indicate successful Sequence delivery or to set Abort Sequence Condition bits. An additional ACK_0 shall be used within a Sequence to perform X_ID interlock.

ACK_0 shall not participate in end-to-end Credit management. Mixing ACK forms in a Sequence is not allowed.

Although infinite buffers is indicated at the level specified by this standard within an Nx_Port, individual FC-4s (e.g., FCP-4) may agree on a maximum Information Unit size that limits the maximum Sequence size. By further controlling the maximum number of concurrent Sequences, each Nx_Port may limit the amount of buffering that is actually required.

15.3.2.2.4 Header definition for all ACK forms

15.3.2.2.4.1 Addressing

The D_ID field designates the source of the Data frame (Sequence Initiator) being replied to by the ACK, while the S_ID field designates the source of the ACK frame (Sequence Recipient).

15.3.2.2.4.2 F_CTL

The F_CTL field is returned with both Sequence and Exchange Context bits inverted in the ACK frame. Other bits may also be set according to table 51.

15.3.2.2.4.3 SEQ_ID

Equal to the SEQ_ID of the frame being replied to by ACK.

15.3.2.2.4.4 SEQ_CNT

Shall be equal to the SEQ_CNT of the highest Data frame being replied to by the ACK.

15.3.2.2.4.5 Parameter field

The Parameter Field is defined as follows:

a) History Bit (bit 16):
   A) 0 = all previous ACKs transmitted; or

B) 1 = at least one previous ACK not transmitted;

and

b) ACK_CNT (bits 15 - 0):

A) N = 0 All Data frames (ACK_0);

B) N = 1 Data frame (ACK_1); or

C) N > 1 Reserved.

15.3.2.2.5 Responses

The responses to ACK are F_RJT, P_RJT or F_BSY.

15.3.3 Link_Response

15.3.3.1 Introduction

Link_Response frames shall be sent for Class 2. An FC_Port shall only send Link_Response frames in reply to valid frames (see 11.3.9.2).

A Link_Response frame indicates that the frame identified by the Sequence_Qualifier and SEQ_CNT was not delivered to or processed by the destination Nx_Port. When an FC_Port generates a Link_Response frame, it is routed to the Nx_Port indicated by the D_ID in the frame. Link_Response frames may be:

a) Busy - indicates a busy condition was encountered by the FC_Port; or

b) Reject - indicates that delivery of the frame is being denied.

15.3.3.2 Fabric Busy (F_BSY)

15.3.3.2.1 Description

The F_BSY frame shall indicate that the FC_Port generating the F_BSY is temporarily occupied with other link activity and is unable to deliver the frame. A reason code is identified in the TYPE field (word 2, bits 31-28). In Class 2, any Data frame or ACK frame may receive an F_BSY response. A Busy response shall not be used in Class 3.

There are two different Link_Control codes defined for F_BSY as shown in table 69. When word 0, bits 27-24 has a value of 5h, the F_BSY is in response to a Data frame. When word 0, bits 27-24 has a value of 6h, F_BSY is in response to a Link_Control frame.

A F_BSY frame shall not be transmitted in response to another busy frame (either F_BSY or P_BSY). If the Fabric is unable to deliver the F_BSY frame, it shall be discarded.

When an Nx_Port receives an F_BSY frame in response to a Data frame, the Nx_Port shall retransmit the busied frame if it has not exhausted its ability to retry. Therefore, an Nx_Port shall save sufficient information for Data frames with a SOF_{x2} delimiter for retransmission until an ACK or RJT is received or retry is exhausted.

If an Nx_Port has exhausted its ability to retry Data frames in response to an F_BSY, it shall notify the FC-4 or an upper level. The Nx_Port may perform the Abort Sequence Protocol based on the Exchange Error Policy.

It is not necessary to save information in order to retransmit a Link_Control frame, since F_BSY to a Link_Control frame contains all information required to retransmit and P_BSY is not allowed in response to Link_Control frames. In Class 2, if an Nx_Port receives an F_BSY in response to an ACK frame, it shall discard the F_BSY frame.

If a Fabric determines it needs to send an F_BSY in response to a frame, it shall set fields in the header as follows:

a) copy the S_ID and D_ID fields from the busied frame into the D_ID and S_ID fields, respectively (i.e., interchange them). Thus, the D_ID field designates the source of the frame encountering the busy condition while the S_ID field designates the destination of the frame encountering the busy condition;
b) invert the Exchange and Sequence Context bits in the F_CTL field. Other F_CTL bits may also be set in accordance with table 51;
c) select the correct Link_Control code value for the F_BSY depending on whether it is in response to a Data frame or Link_Control frame;
d) the SEQ_ID, SEQ_CNT and Parameter fields shall be copied unchanged from the frame being busied;
e) the Data_Field (if any) shall be discarded;
f) select the most appropriate reason code (see table 72) and place it in the TYPE field (Word 2, bits 31-28); and
g) if the frame being busied is a Link_Control frame, the Link_Control command code (see table 69) of the busied frame in the INFORMATION field (Word 0, bits 27-24) shall be copied to the TYPE field (Word 2, bits 27-24) of the F_BSY frame.

The Fabric shall use EOF_n for Class 2 F_BSY frames.

Table 72 - F_BSY Reason Codes

Encoded Value Word 2, bits 31-28	Name	Description
1h	Fabric busy	The Fabric is unable to deliver the frame to the destination Nx_Port due to conditions internal to the Fabric.
3h	Obsolete	
Others	Reserved	

15.3.3.2.2 Responses

There is no response to an F_BSY.

15.3.3.3 N_Port Busy (P_BSY)

15.3.3.3.1 Description

The P_BSY shall indicate that the destination Nx_Port is temporarily occupied with other link activity and is not able to accept the frame. A reason code shall be identified in the Parameter field of a P_BSY frame. In Class 2, any Data frame may receive a P_BSY response. A Busy response shall not be used in Class 3.

A P_BSY frame shall not be transmitted in response to another Busy frame (either F_BSY or P_BSY). If the Nx_Port is unable to accept the P_BSY frame, it shall be discarded.

When an Nx_Port receives P_BSY in response to a frame transmission, the Nx_Port shall retransmit the busied frame if it has not exhausted its ability to retry. Therefore, an Nx_Port shall save sufficient information for Data frames with a SOF_{x2} delimiter for retransmission until an ACK or RJT is received or retry is exhausted.

If an Nx_Port has exhausted its ability to retry Data frame transmission in response to a P_BSY, it shall notify the FC-4 or an upper level. The Nx_Port may perform the Abort Sequence protocol based on the Exchange Error Policy.

P_BSY indicates that the Busy was issued by the destination Nx_Port. P_BSY shall not be issued in response to a Link_Control frame. An Nx_Port shall process a Link_Control frame for each unacknowledged Data frame transmitted.

If an Nx_Port determines it needs to send a P_BSY in response to a frame, it shall set fields in the header as follows:

a) copy the S_ID and D_ID fields from the busied frame into the D_ID and S_ID fields, respectively (i.e., interchange them). Thus, the D_ID field designates the source of the frame encountering the busy condition while the S_ID field designates the destination of the frame encountering the busy condition;
b) invert the Exchange and Sequence Context bits in the F_CTL field. Other F_CTL bits may also be set in accordance with table 51;
c) the SEQ_ID and SEQ_CNT fields shall be copied unchanged from the frame being busied;
d) the four bytes of the Parameter field shall indicate the action and reason code for the P_BSY response as defined in table 73. Table 74 and table 75 specify the P_BSY action and reason codes, respectively; and
e) the Data_Field (if any) shall be discarded.

Table 73 - P_BSY code format

Parameter field	
Bits	**Value**
31 -24	Action Code (see table 74)
23 - 16	Reason Code (see table 75)
15 - 8	Reserved
7 - 0	Vendor Unique Code

Table 74 - P_BSY action codes

Encoded Value Word 5, bits 31-24	Description
01h	Action 1: indicates that the Sequence Recipient has busied the Sequence (EOF_t). The Sequence Recipient shall only terminate the Sequence on a Busy in response to an interlocked Data frame associated with X_ID assignment (SOF_{i2}). The frame and Sequence are retryable at a later time.
02h	Action 2: indicate that the Sequence Recipient has busied a Class 2 frame and that the Sequence has not been terminated (EOF_n). The frame is retryable at a later time.
Others	Reserved

Table 75 - P_BSY Reason Codes

Encoded Value Word 5, bits 23-16	Definition	Description
01h	PN_Port busy (P_BSY)	The destination Nx_Port LCF is currently busy and is unable to accept of the frame.
03h	N_Port Resource busy	The destination Nx_Port is unable to process the Data frame at the present time.
07h	Obsolete	
FFh	Vendor specific Busy (See Bits 7-0)	May be used to specify vendor unique reason codes.
Others	Reserved	

15.3.3.3.2 Responses

None.

15.3.3.4 Reject (P_RJT, F_RJT)

15.3.3.4.1 Introduction

The Reject Link_Response shall indicate that delivery of a frame is being denied. A four-byte reject action and reason code shall be contained in the Parameter field. Rejects may be transmitted for a variety of conditions. For certain conditions retry is possible, whereas other conditions it is not and intervention beyond the scope of this standard may be required.

In Class 2, if an FC_Port detects an error in a Data frame, it shall transmit a Reject frame with one of the reason codes specified in table 78. If an error is detected in a Link_Control frame, a Reject frame shall only be transmitted under specific conditions.

A Fabric shall only reject a Link_Control frame for the following reasons:

a) Class not supported;
b) Invalid D_ID;
c) Invalid S_ID;
d) Nx_Port not available-temporary;
e) Nx_Port not available-permanent; or
f) Login required (Fabric).

An Nx_Port shall only reject a Link_Control frame if it is an unexpected ACK. If an Nx_Port rejects an unexpected ACK, it shall use Reject Action code 2 as specified in table 77.

If an Nx_Port detects an error in a Link_Control frame for a valid Exchange for a reason not listed above, it shall initiate the Abort Sequence Protocol and not transmit a Reject frame. For an unidentified or invalid Exchange, if an error is detected in a Link_Control frame, the Nx_Port shall discard the frame and ignore the Link_Control frame error. If a Class 3 frame satisfies a rejectable condition, the frame shall be discarded. A Reject frame (F_RJT, P_RJT) shall not be transmitted in response to another Reject frame (either F_RJT or P_RJT); the received Reject frame in error shall be discarded.

If an Nx_Port determines it needs to send a Reject (either F_RJT or P_RJT) in response to a frame, it shall set fields in the header as follows:

a) copy the S_ID and D_ID fields from the rejected frame into the D_ID and S_ID fields, respectively (i.e., interchange them). Thus, the D_ID field designates the source of the frame encountering the reject condition while the S_ID field designates the destination of the frame encountering the reject condition;
b) invert the Exchange and Sequence Context bits in the F_CTL field. Other F_CTL bits may also be set in accordance with table 51;
c) the SEQ_ID and SEQ_CNT shall be copied unchanged from the frame being rejected;
d) the four bytes of the Parameter field shall indicate the action and reason for the Reject response as defined in table 76. Table 77 and table 78 specify the Reject Action codes and Reject Reason Codes respectively; and
e) the Data_Field (if any) shall be discarded.

15.3.3.4.2 Parameter field

15.3.3.4.2.1 Reject Code format

The four bytes of this field shall indicate the action code and reason for rejecting the request (see table 76, table 77 and table 78).

The first error detected shall be the error reported; the order of checking is not specified.

Table 76 - Reject Code format

Parameter field	
Bits	**Value**
31 -24	Action Code (see table 77)
23 - 16	Reason Code (table 78)
15 - 8	Reserved
7 - 0	Vendor Unique Code

Table 77 - Reject Action Codes

Encoded Value Word 5, bits 31-24	Description	Action
01h	Retryable error	Action 1: indicates that if the condition indicated in the reject Reason code is changed or corrected, the sequence may be retryable. Applicability: by Fabric when D_ID = Fabric by Fabric when D_ID = Nx_Port by Nx_Port when D_ID = Nx_Port
02h	Non-retryable error	Action 2: indicates that the Sequence is non-retryable and further recovery (e.g., Abort Exchange) may be required Applicability: by Fabric when D_ID = Fabric by Nx_Port when D_ID = Nx_Port
Other codes	Reserved	

Table 78 - Reject Reason Codes (part 1 of 2)

Encoded Value Word 5, bits 23-16	Description	By	Action Code
01h	Invalid D_ID	B	R
02h	Invalid S_ID	B	R
03h	Nx_Port not available, temporary	F	R
04h	Nx_Port not available, permanent	F	R
05h	Class not supported	B	R
06h	Delimiter usage error	B	N
07h	TYPE not supported	B	N
08h	Invalid Link_Control	P	N
09h	Invalid R_CTL field	P	N
0Ah	Invalid F_CTL field	P	N
0Bh	Invalid OX_ID	P	N
0Ch	Invalid RX_ID	P	N
0Dh	Invalid SEQ_ID	P	N
0Eh	Invalid DF_CTL	F	N
0Fh	Invalid SEQ_CNT	P	N
10h	Invalid Parameter field	P	N
11h	Exchange error	P	N
12h	Protocol error	P	N
13h	Incorrect length	B	N
14h	Unexpected ACK	P	N
15h	Class of service not supported by entity at FF FF FEh	F	R
16h	Login Required	B	R
17h	Excessive Sequences attempted	P	R
18h	Unable to Establish Exchange	P	R
19h	Reserved	N/A	N/A
1Ah	Fabric path not available	F	R
1Bh	Invalid VC_ID (Class 4) - Obsolete	N/A	N/A

Key:
F = F_RJT (Fx_Port)
P = P_RJT (Nx_Port)
B = Both F_RJT and P_RJT
R = Retryable
N = Non-retryable

Table 78 - Reject Reason Codes (part 2 of 2)

Encoded Value Word 5, bits 23-16	Description	By	Action Code
1Ch	Invalid CS_CTL field	B	N
1Dh	Insufficient resources for VC (Class 4) - Obsolete	N/A	N/A
1Fh	Invalid class of service	B	N
20h	Obsolete	N/A	N/A
21h	Obsolete	N/A	N/A
22h	Obsolete	N/A	N/A
23h	Obsolete	N/A	N/A
24h	Process Login required	P	R
25h	Invalid Attachment	F	N
FFh	Vendor specific reject (See bits 7-0)	P	R
Others	Reserved	N/A	N/A

Key:
F = F_RJT (Fx_Port)
P = P_RJT (Nx_Port)
B = Both F_RJT and P_RJT
R = Retryable
N = Non-retryable

If a frame within a Sequence is rejected, the Sequence shall be abnormally terminated or aborted. If an EOF_t ends the RJT frame, the FC_Port transmitting the RJT frame has terminated the Sequence. In Class 2 an FC_Port shall only terminate the Sequence on a Reject in response to an interlocked Data frame associated with X_ID assignment (SOF_{i2}). If an EOF_n ends the RJT frame, the Nx_Port receiving the RJT frame shall perform the Abort Sequence protocol to abort the Sequence. Rejects shall only be transmitted in response to valid frames.

15.3.3.4.2.2 Invalid D_ID

F_RJT: The Fabric is unable to locate the destination Nx_Port address.

P_RJT: The Nx_Port that received this frame does not recognize the D_ID as its own Identifier.

15.3.3.4.2.3 Invalid S_ID

F_RJT: The S_ID does not match the N_Port_ID assigned by the Fabric.

P_RJT: The destination Nx_Port does not recognize the S_ID as valid.

15.3.3.4.2.4 Nx_Port not available, temporary

F_RJT: The Nx_Port specified by the D_ID is a valid destination address but the Nx_Port is not functionally available (e.g., the Nx_Port is online and may be performing a Link Recovery Protocol).

15.3.3.4.2.5 Nx_Port not available, permanent

F_RJT: The Nx_Port specified by the D_ID is a valid destination address but the Nx_Port is not functionally available. The Nx_Port is Offline or Powered Down.

15.3.3.4.2.6 Class not supported

F_RJT or P_RJT: The class specified by the SOF delimiter of the frame being rejected is not supported.

15.3.3.4.2.7 Delimiter usage error

F_RJT or P_RJT: The SOF or EOF is not appropriate for the current conditions. See tables 66 and 70 for allowable delimiters by class.

15.3.3.4.2.8 TYPE not supported

F_RJT or P_RJT: The TYPE field of the frame being rejected is not supported by the FC_Port replying with the Reject frame.

15.3.3.4.2.9 Invalid Link_Control

P_RJT: The command specified in the Information Category bits within R_CTL field in the frame being rejected is invalid or not supported as a Link_Control frame.

15.3.3.4.2.10 Invalid R_CTL field

P_RJT: The R_CTL field is invalid or inconsistent with the other Frame_Header fields or conditions present.

15.3.3.4.2.11 Invalid F_CTL field

P_RJT: The F_CTL field is invalid or inconsistent with the other Frame_Header fields or conditions present.

15.3.3.4.2.12 Invalid OX_ID

P_RJT: The OX_ID specified is invalid or inconsistent with the other Frame_Header fields or conditions present.

15.3.3.4.2.13 Invalid RX_ID

P_RJT: The RX_ID specified is invalid or inconsistent with the other Frame_Header fields or conditions present.

15.3.3.4.2.14 Invalid SEQ_ID

P_RJT: The SEQ_ID specified is invalid or inconsistent with the other Frame_Header fields or conditions present.

15.3.3.4.2.15 Invalid DF_CTL

P_RJT: The DF_CTL field is invalid.

15.3.3.4.2.16 Invalid SEQ_CNT

P_RJT: The SEQ_CNT specified is inconsistent with the other Frame_Header fields or conditions present. A SEQ_CNT reject is not used to indicate out of order or missing Data frames (see 12.7 bits 5-4 (F_CTL Abort Sequence Condition)).

15.3.3.4.2.17 Invalid Parameter field

P_RJT: The Parameter field is incorrectly specified or invalid.

15.3.3.4.2.18 Exchange Error

P_RJT: An error has been detected in the identified Exchange (OX_ID). This could indicate Data frame transmission without Sequence Initiative or other logical errors in handling an Exchange.

15.3.3.4.2.19 Protocol Error

P_RJT: This indicates that an error has been detected that violates the rules of FC-2 signaling protocol that are not specified by other error codes.

15.3.3.4.2.20 Incorrect length

F_RJT or P_RJT: The frame being rejected is an incorrect length for the conditions present.

15.3.3.4.2.21 Unexpected ACK

P_RJT: An ACK was received from:

a) an Nx_Port that is not Logged in (i.e., an unexpected S_ID);
b) an Nx_Port that is Logged-in but not for an open Sequence or Exchange referenced in the ACK; or
c) an Nx_Port that is Logged-in, for an open Sequence or Exchange referenced in the ACK, but that has no outstanding frames to acknowledge.

The EOF delimiter for the P_RJT shall be EOFn.

15.3.3.4.2.22 Class of service not supported by entity at FF FF FEh

F_RJT: The class specified by the SOF delimiter of the frame being rejected is not supported by the Fx_Port (FF FF FEh)

15.3.3.4.2.23 Login Required

F_RJT or P_RJT: An Exchange is being initiated before the interchange of Service Parameters (i.e., Login) has been performed. The Fabric may issue F_RJT in order to notify an Nx_Port that a Login with the Fabric is required due to changes within the Fabric. The Fabric shall not issue F_RJT in order to convey Login status of a destination Nx_Port.

15.3.3.4.2.24 Excessive Sequences attempted

P_RJT: A new Sequence was initiated by an Nx_Port that exceeded the capability of the Sequence Recipient as specified in the Service Parameters during Login.

15.3.3.4.2.25 Unable to Establish Exchange

P_RJT: A new Exchange was initiated by an Nx_Port that exceeded the capability of the Responder facilities.

15.3.3.4.2.26 Fabric path not available

F_RJT: The speed of the source and destination PN_Ports do not match. Other Fabric characteristics related to multiple Fabric domains may also use this reason code.

15.3.3.4.2.27 Invalid CS_CTL Field

F_RJT or P_RJT: The CS_CTL field is invalid.

15.3.3.4.2.28 Invalid class of service

F_RJT or P_RJT: The class of service indicated by the SOF is invalid for the conditions present

15.3.3.4.2.29 Invalid Attachment

F_RJT: The attached Port has failed a security check and become an Invalid Attachment.

15.3.3.4.2.30 Vendor Specific Reject

F_RJT or P_RJT: The Vendor specific Reject bits (bits 7-0) may be used to specify vendor specific reason codes.

15.3.3.4.3 Responses

The responses to F_RJT or P_RJT are F_BSY or none.

15.3.4 Link_Control commands

15.3.4.1 Introduction

Link_Control commands are Link_Control frames that initiate a low-level action at the destination Nx_Port. These commands are limited in scope and are normally associated with functions such as reset. Link_Control commands do not require end-to-end Credit and do not participate in end-to-end flow control with regard to incrementing or decrementing EE_Credit_CNT. Link_Control commands shall not be considered to be part of any existing Exchange or Sequence.

15.3.4.2 Link Credit Reset (LCR)

15.3.4.2.1 Description

The LCR frame shall indicate that the Nx_Port specified by the S_ID requests that the Nx_Port specified by the D_ID reset any buffers containing Data frames from the S_ID in order to allow the S_ID to set its EE_Credit_Count to zero. Both Nx_Ports abnormally terminate all active Sequences with the S_ID as Sequence Initiator and the D_ID as Sequence Recipient for all classes of service.

The Nx_Port specified by the S_ID shall perform Exchange and Sequence recovery at the discretion of the appropriate Upper Level Protocol. After transmitting the LCR frame, the Nx_Port that requested the Credit Reset shall wait R_A_TOV before initiating Sequences with the destination Nx_Port. The LCR frame shall not be transmitted as part of an existing Sequence or Exchange. All fields other than R_CTL, D_ID, and S_ID are reserved and ignored by the receiver except for CRC calculation.

Link Credit Reset shall only be transmitted in Class 2. See 22.5.3.4 for a discussion of end-to-end Credit loss in Class 2 resulting from Sequence timeout. Any Class 3 Data frames in the destination Nx_Port buffers with the S_ID equal to the S_ID in the LCR and the D_ID equal to the D_ID in the LCR are also reset. LCR shall be transmitted with SOF_{n2} and EOF_n.

15.3.4.2.2 Protocol

a) LCR; and
b) no reply frame.

15.3.4.2.3 Request Sequence

Addressing: The S_ID field designates the Nx_Port that is requesting a buffer reset by the destination Nx_Port or D_ID.

15.3.4.2.4 Responses

The possible responses are:

a) none;
b) F_RJT, P_RJT; or
c) F_BSY.

NOTE 33 - F_RJT may be returned for any of the reasons allowed by the Fabric. P_RJT is only returned for "Invalid D_ID" or "Class not supported" in order to allow an Nx_Port to avoid special casing LCR in Class 2. However, the Nx_Port transmitting LCR should be aware of possibility of F_RJT or P_RJT in order to avoid EE_Credit_CNT problems. In particular, the zero values of OX_ID, RX_ID, SEQ_ID, and SEQ_CNT should be noted for possible conflict with an existing Exchange.

15.4 ACK generation assistance

15.4.1 Introduction

If a Sequence Recipient supports multiple ACK forms, an indication about the required ACK form by the Sequence Initiator as indicated during Login may be of assistance to the Sequence Recipient in generating it. This shall be done in accordance with table 71. See FC-LS-4 for definition of the Login bits referenced in table 71.

15.4.2 Capability Indication

The ACK generation assistance capability is indicated during N_Port Login in the Nx_Port Class Service Parameters.

The Initiator Control Flags are specified in FC-LS-4.

15.4.3 Applicability

The ACK precedence determined during Login is applicable to all Class 2 Data frames.

ACK form is meaningful on all Class 2 Data frames of a Sequence. ACK form is not meaningful on Class 2 Link_Control frames or any Class 3 frames.

15.4.4 F_CTL bits

F_CTL Bits 13-12 (ACK_Form bits) are set by Sequence Initiator to provide an optional assistance to the Sequence Recipient by indicating in this F_CTL field (see table 47) its ACK capability determined during N_Port Login.

15.4.5 Login rules

Only ACK_1 shall be used during or before the establishment of Login parameters. Additional rules are specified for ACK_Form bits usage during these conditions:

a) in Class 2, ACK_1 shall be used to acknowledge PLOGI and FLOGI and the corresponding LS_ACC;
b) if ACK generation assistance is not provided, the ACK_Form bits shall be set to 00b on the FLOGI or PLOGI frame and the corresponding LC_ACC frame;
c) if ACK generation assistance is provided, the ACK_Form bits shall be set to 01b on the FLOGI or PLOGI frame and the corresponding LC_ACC frame; and
d) once established, the ability or inability to provide ACK generation assistance shall not change until logout or Relogin occurs.

15.4.6 ACK_Form errors

If a Sequence Recipient receives an ACK_Form value that it does not support, it shall issue a P_RJT with the reason code "Protocol error".

16 Basic Link Services

16.1 Scope

Basic Link Services are FC-3 functions.

16.2 Introduction

Link Services are low-level operations to manage the communications between Fibre Channel devices and the interaction between a device and the Fabric to which it is attached. There are three Link Service types:

a) Basic Link Services -- single frame, single Sequence commands, which may be embedded in an unrelated Exchange;
b) Extended Link Services -- commands sent by means of a dedicated Exchange; and
c) FC-4 Link Services -- Link Services performed by a specific FC-4 protocol.

Basic Link Services are specified in this standard. The set of Extended Link Services (ELSs) along with the frame format and protocol for both ELSs and FC-4 Link Services are described in FC-LS-4. FC-4 Link Service functions are specified in the applicable FC-4 specification.

Link Service frames and Sequences are composed of Link_Data frames and shall operate according to the ACK and Link_Response rules specified in clause 15 and the flow control rules specified in clause 20.

Basic Link Service commands consist of only a single Basic Link_Data frame and are interspersed or are part of a Sequence for an Exchange performing a specific protocol other than Basic Link Service. In such cases, the Basic Link Service command does not constitute a separate Information Category in specifying the number of Information Categories in a Sequence as a Login parameter. Basic Link Service commands support low-level functions (e.g., passing control bit information in a NOP, or aborting a Sequence using ABTS). Login shall not be required prior to using Basic Link Service commands.

16.3 Basic Link Service commands

16.3.1 Introduction

Nx_Ports shall support Basic Link Service commands as specified in table 79.

The DF_CTL field shall be set to 00h or to 40h.

The R_CTL field shall be set as defined in table 79 to indicate Basic Link Service commands.

The TYPE field (Word 1 bits 31-24) shall be set to zero.

The timeout for a Basic Link Service shall be 2 • R_A_TOV except for FLUSH and RED, that do not have a timeout.

Table 79 - Basic Link Service Information Categories

R_CTL		Description	Abbreviation	Mandatory/ Optional
ROUTING	INFORMATION			
8h	0h	No Operation	NOP (see 16.3.5)	M
	1h	Abort Sequence	ABTS (see 16.3.2)	M
	2h	Obsolete		M
	4h	Basic_Accept	BA_ACC (see 16.3.3)	M
	5h	Basic_Reject	BA_RJT (see 16.3.4)	M
	6h	Obsolete		
	7h	Flush Exchange and verify status	FLUSH (see 16.3.6)	O
	8h	Flush Exchange and verify status response	FLUSH_RSP (see 16.3.7)	O
	9h	Responder Error Detected	RED (see 16.3.8)	O
	Others	Reserved		

16.3.2 Abort Sequence (ABTS)

16.3.2.1 Overview

The ABTS frame shall be used by:

a) the Sequence Initiator to request that the Sequence Recipient abort one or more Sequences (see 16.3.2.2 and 22.5.5.2.2); and
b) the Sequence Recipient to request that the ABTS Recipient abort the entire Exchange (see 16.3.2.3).

The decision to attempt to abort one or more Sequences may be determined by the Sequence Initiator (Sequence timeout) or the Sequence Recipient (ACK frame Abort Sequence Condition bits 5-4 or P_RJT frame).

The Sequence Initiator may require that the Sequence Recipient abort one or more sequences by setting bit 0 in the Parameter field to one. If bit 0 in the Parameter field is set to zero, the Sequence Recipient may elect to abort one or more Sequences or elect to abort the entire Exchange in a protocol specific manner.

An ABTS Initiator may specify the reason for transmitting the ABTS by providing an abort reason code in the Parameter field (see table 80).

The Sequence Recipient may request that one or more Sequences in progress be aborted by setting the Abort Sequence Condition bits to a value of 01b on an ACK frame (see 12.7.10). The ABTS frame may be transmitted without regard to which Nx_Port holds, or may hold, the Sequence Initiative.

Whether a Sequence or Exchange is aborted shall be based on the value of bit 0 in the Parameter field.

The Parameter field for an ABTS frame shall be as specified in table 80.

Table 80 - ABTS Parameter field

Bit(s)	Description	Meaning
31 - 16	Reserved	
15 to 8	Abort reason code	See table 81
7 to 1	Reserved	
0	Abort type	0 = Abort Exchange 1 = Abort Sequence

The ABTS abort reason codes are specified in table 81.

Table 81 - ABTS abort reason codes

Value	Description
00h	No explanation (i.e., default value)
01h	Invalid frame
02h	Out of context frame (e.g., Sequence number/count inconsistency)
03h	Non-existent Exchange (e.g., unknown OX_ID, RX_ID)
04h	Out of resources
05h	Sequence timeout
06h	Internal error (e.g., DMA error)
07h	Invalid relative offset
08h	Command timeout
81h	SB protocol timeout (see FC-SB-6) [a]
8h2	SB Reserved [a]
83h	SB Reserved [a]
84h	SB Reserved [a]
85h	SB Reserved [a]
86h	SB length error (see FC-SB-6) [a]
87h	SB LRC error (see FC-SB-6) [a]
88h	SB CRC error (see FC-SB-6) [a]
89h	SB IU count error (see FC-SB-6) [a]
8Ah	SB link-level protocol error (see FC-SB-6) [a]
8Bh	SB device-level protocol error (see FC-SB-6) [a]
8Ch	SB Receive ABTS (see FC-SB-6) [a]

Table 81 - ABTS abort reason codes

Value	Description
8Dh	SB Cancel function timeout (see FC-SB-6) [a]
8Eh	SB Abnormal termination of Exchange (see FC-SB-6) [a]
8Fh	SB Host storage error (see FC-SB-6) [a]
90h	SB Software termination of Exchange due to halt request (see FC-SB-6) [a]
91h	SB Software termination of Exchange due to clear request (see FC-SB-6) [a]
92h	SB Interrogate operation error (see FC-SB-6) [a]
93h	SB Transport operation error (see FC-SB-6) [a]
94h	SB Transport error (see FC-SB-6) [a]
95h	SB REC error (see FC-SB-6) [a]
all others	Reserved
[a] Values 81 – 9F are used in association with FC-SB-6	

16.3.2.2 Aborting Sequences using ABTS

16.3.2.2.1 Introduction

When aborting sequences using ABTS:

a) none, one or multiple Sequences are aborted;
b) ABTS is transmitted by the Sequence Initiator of the last Sequence; and
c) ABTS is transmitted as part of the open Sequence.

The SEQ_ID of the ABTS frame shall match the SEQ_ID of the last Sequence transmitted by the Sequence Initiator of the ABTS frame. Since ABTS is a continuation of the last transmitted Sequence, it shall be transmitted in the same class. Since Sequences shall not be streamed in more than one class, the class in which the ABTS is transmitted shall be the same class in which an error, if any, occurred. The RX_ID and OX_ID specified in the ABTS Frame_Header shall be associated with the Exchange in which the Sequence Initiator has detected a potential error.

F_CTL bits, (e.g., First_Sequence), shall be set to match previous Data frames within this Sequence since the ABTS frame is part of the Sequence. F_CTL bits for Sequence Initiative (bit 16) and End_Sequence (bit 19) shall be set to one in order to transfer Sequence Initiative.

16.3.2.2.2 ABTS Initiator

Since ABTS is used for error recovery, the following relaxed behaviors are allowed. An ABTS Initiator may transmit ABTS, even if:

a) there is no end-to-end Credit available;

b) it does not hold the Sequence Initiative;
c) there is no Sequence open; and
d) maximum number of Concurrent Sequences supported are in use.

After transmitting the ABTS frame, an Nx_Port shall consider the status of the Exchange in which it was transmitted to be in an indeterminate condition and shall not deliver any Sequences or notification of Sequence delivery to an upper level until the BA_ACC is received, processed, and recovery, if any, is performed. Due to out of order delivery and special ACK transmission rules, an ACK to a Data frame within the range of a Recovery_Qualifier may mislead the Sequence Initiator of the ABTS prior to reception of the BA_ACC.

NOTE 34 - The ABTS frame may be transmitted after a Sequence timeout. The Sequence Initiator of the ABTS frame should reset the E_D_TOV and R_A_TOV timers when the ABTS frame is transmitted, just as any other Data frame transmitted for a Sequence.

16.3.2.2.3 ABTS Recipient

When the ABTS Request frame is received, the Sequence Recipient may abort no Sequences, one Sequence, or multiple Sequences based on the status of each Sequence within an Exchange and the Exchange Error Policy (see 22.5.4.3). After receiving the ABTS frame, the Recipient shall determine a range of SEQ_CNT values found in error, if any, associated with the identified Exchange. Data frames for any deliverable Sequences (see 19.4.1) may be processed after the ABTS frame is received based on the policy for the Exchange, but before the BA_ACC is transmitted.

Transmission of the BA_ACC to the ABTS frame is an atomic function in that any Data frames identified in the range of the Recovery_Qualifier (identified in the BA_ACC Payload) shall be discarded after the BA_ACC is transmitted to the Sequence Initiator. The BA_ACC provides a synchronization point between the Sequence Initiator and Sequence Recipient. The ABTS Sequence Recipient is not required to timeout waiting for any missing frames before transmitting the BA_ACC. The ABTS Sequence Recipient shall set F_CTL bit 16 to zero in the BA_ACC to indicate that it holds the Sequence Initiative for the Exchange or set it to one to indicate that the ABTS Sequence Initiator holds the Sequence Initiative.

The format of the BA_ACC Payload is shown in table 82. The SEQ_ID, if indicated as valid, shall be the last deliverable Sequence transmitted by the Sequence Initiator (of ABTS). If the SEQ_ID is indicated as invalid, then the Sequence Recipient has no information on the last deliverable Sequence. The low SEQ_CNT value shall be equal to the SEQ_CNT of the last Data frame of the last deliverable Sequence. The high SEQ_CNT value shall be equal to the SEQ_CNT of the ABTS frame.

In the BA_ACC Payload, if the low SEQ_CNT equals high SEQ_CNT and the last valid SEQ_ID in the BA_ACC matches the last Sequence that was transmitted, then no Sequences have been aborted (i.e., all were deliverable), no Recovery_Qualifier is identified, and no recovery is required. If the low SEQ_CNT is not equal to the high SEQ_CNT or the last SEQ_ID is not the last Sequence transmitted, then at least one Sequence is in error.

16.3.2.2.4 Recovery Qualifier

If the ABTS frame was transmitted and and at least one Sequence is in error as indicated by the sequence counts in the BA_ACC, a Recovery_Qualifier shall be established for both Nx_Ports. A Recovery_Qualifier range is identified by the S_ID, D_ID, OX_ID and RX_ID in combination with a range of SEQ_CNT values (low and high). If a Recovery_Qualifier exists, the Sequence Initiator of the ABTS frame shall discard ACK and Link_Response frames received that correspond to the Recovery_Qualifier between the low and high SEQ_CNT values. After transmission of the BA_ACC to the ABTS frame the Sequence Recipient of the

ABTS frame shall discard Data frames received that correspond to the Recovery_Qualifier between the low and high SEQ_CNT values if a Recovery_Qualifier exists. While the Recovery_Qualifier exists, the Sequence Initiator shall not transmit Data frames for the Recovery_Qualifier within the specified low and high SEQ_CNT values.

If a Recovery_Qualifier has been established, based on the BA_ACC Payload, the Sequence Initiator of the ABTS shall issue a Reinstate Recovery Qualifier (RRQ) ELS Request Sequence (see FC-LS-4) after waiting an R_A_TOV timeout period after reception of the BA_ACC.

After the BA_ACC has been transmitted and the Sequence status has been posted in the Exchange Status Block as Aborted, if the Sequence Recipient receives any Data frames for the Aborted Sequence or Aborted Sequences (based on the range of a Recovery_Qualifier), the frames shall be discarded. See 22.5.5.2 and 22.5.3 for more discussion on abnormal termination of Sequences and Sequence timeout. See 22.5.5.2.2 for examples of the ABTS protocol that include several special cases (e.g., the start of an Exchange and Class 3). Additional information regarding Sequence recovery and the effects of ABTS based on different Exchange Error Policies is also discussed.

Following reception of the BA_ACC to the Abort Sequence frame, the Sequence Initiator may perform Sequence recovery under guidance from the appropriate FC-4.

16.3.2.2.5 Protocol

a) Abort Sequence Request frame; and
b) BA_ACC or BA_RJT Reply frame.

16.3.2.2.6 Request Sequence

Addressing: The D_ID field designates the Sequence Recipient Nx_Port. The S_ID field designates the source Sequence Initiator Nx_Port that is requesting that a Sequence or Sequences be aborted.

X_ID: Both the RX_ID and OX_ID shall correspond to the current values as determined by the Sequence Initiator of the ABTS frame.

SEQ_ID and SEQ_CNT: The SEQ_ID shall be the same as the last Sequence transmitted for this Exchange by the Nx_Port transmitting ABTS, even if the last Data frame has been transmitted. The SEQ_CNT shall be set to a value one greater than the previous Data frame transmitted, indicating the highest SEQ_CNT transmitted for this SEQ_ID and the highest SEQ_CNT for this range of SEQ_CNTs over multiple Sequences.

Parameter: The Parameter field shall be set as specified in table 80.

Payload: The Abort Sequence Basic Link Service command has no Payload.

16.3.2.2.7 Reply Sequence

BA_RJT: BA_RJT signifies rejection of the ABTS command, however, the Sequence may have been aborted without Sequence information (see 16.3.4).

The SEQ_ID, if indicated as valid, shall be the last deliverable Sequence transmitted by the Sequence Initiator. If the SEQ_ID is indicated as invalid, then the Sequence Recipient has no information on the last deliverable Sequence.

BA_ACC: BA_ACC signifies that the destination Nx_Port has aborted and discarded no Sequences, one Sequence, or multiple Sequences.

The high SEQ_CNT shall be equal to the SEQ_CNT of the ABTS frame. The low SEQ_CNT value shall be one of the following:

a) same as SEQ_CNT of the ABTS frame;
b) equal to the SEQ_CNT of the last Data frame of the last deliverable Sequence; or
c) set to 00 00h.

The Payload is specified for each of the permitted cases:

a) to indicate that the current Sequence in which ABTS has been received is the last deliverable Sequence, and no Sequences are aborted at its end, the Sequence Recipient shall set, in the BA_ACC Payload:
   A) SEQ_ID Validity equal valid (80h);
   B) SEQ_ID equal the SEQ_ID of the Sequence in which the ABTS has been received from the Sequence Initiator; and
   C) low SEQ_CNT equal High SEQ_CNT equal SEQ_CNT of the ABTS frame;
b) to indicate that it has the information on the last deliverable Sequence but one or more Sequences are aborted at its end, the Sequence Recipient shall set, in the BA_ACC Payload:
   A) SEQ_ID Validity equal valid (80h);
   B) SEQ_ID equal the SEQ_ID of the last deliverable Sequence received from the Sequence Initiator but is not equal to the SEQ_ID of the Sequence in which ABTS frame has been received;
   C) low SEQ_CNT equal the SEQ_CNT of the last Data frame of the last deliverable Sequence; and
   D) high SEQ_CNT equal the SEQ_CNT of the ABTS frame;

   and
c) to indicate that it has no information on the last deliverable Sequence, and one or more Sequences are aborted at its end, the Sequence Recipient shall set, in the BA_ACC Payload, independent of continuously increasing SEQ_CNT use:
   A) SEQ_ID Validity equal invalid (00h);
   B) SEQ_ID equal invalid in this case;
   C) low SEQ_CNT equal 00 00h; and
   D) high SEQ_CNT equal the SEQ_CNT of the ABTS frame.

16.3.2.3 Aborting Exchanges using ABTS

16.3.2.3.1 Introduction

Using ABTS to abort an Exchange is specified in this section. In this method,

a) an entire Exchange is aborted;
b) ABTS is transmitted by the Sequence Initiator or the Sequence Recipient of the last Sequence; and
c) ABTS is transmitted as part of the open Sequence or in a new Sequence.

16.3.2.3.2 ABTS sent by the last Sequence Initiator in an open Sequence

If the last Sequence is open and the Sequence Initiator of the last Sequence transmits the ABTS frame, the SEQ_ID of this ABTS frame shall match the SEQ_ID of the last Sequence transmitted by the last Sequence Initiator. The SEQ_CNT of the ABTS frame shall be one greater than the SEQ_CNT of the last Data frame transmitted for this last Sequence.

16.3.2.3.3 ABTS sent by the last Sequence Initiator in a new Sequence

If the last Sequence has been completed and is therefore not open, and the Sequence Initiator of the last Sequence transmits the ABTS frame, the ABTS shall be transmitted in a new Sequence with a valid SEQ_ID not in use at that time.

16.3.2.3.4 ABTS sent in an open or new Sequence

Since ABTS is a continuation of the last transmitted Sequence, it shall be transmitted in the same class. Since Sequences shall not be streamed in more than one class, the class in which the ABTS is transmitted shall be the same class in which an error, if any, occurred. The RX_ID and OX_ID specified in the ABTS Frame_Header shall be associated with the Exchange in which the Sequence Initiator has detected a potential error.

F_CTL bits for Sequence Initiative (bit 16) and End_Sequence (bit 19) shall be set to one in order to transfer Sequence Initiative. If the ABTS frame is part of the last Sequence, F_CTL bits (e.g., First_Sequence) shall be set to match previous Data frames within this Sequence. If the ABTS is transmitted in a new Sequence, F_CTL bits shall be set to match the new Sequence.

16.3.2.3.5 ABTS by the last Sequence Recipient

If the last Sequence Recipient transmits an ABTS frame, it shall transmit ABTS in a new Sequence with a SEQ_ID available for use from its Nx_Port as the Sequence Initiator. The new Sequence shall follow applicable rules for the Sequence. The class in which the ABTS is transmitted shall be the same class in which an error, if any, occurred. The RX_ID and OX_ID specified for the new Sequence shall be associated with the Exchange in which the Sequence Recipient has detected a potential error.

If the Sequence Initiator has not transferred the Sequence Initiative or has transferred the Sequence Initiative but has not received the confirmation, but receives the ABTS frame then the Sequence Initiator shall abort the Exchange by setting the Last_Sequence bit to one in the BA_ACC.

NOTE 35 - If the Sequence Initiator has transferred the Sequence Initiative, received the confirmation but receives ABTS, then it is treated as the ABTS sent by the new Sequence Initiator and the corresponding rules are followed.

16.3.2.3.6 Request Sequence

Addressing: The D_ID field designates the ABTS Recipient Nx_Port. The S_ID field designates the ABTS Initiator Nx_Port that is requesting that an Exchange be aborted.

X_ID: Both the RX_ID and OX_ID shall correspond to the current values as determined by the Sequence Initiator of the ABTS frame.

SEQ_ID and SEQ_CNT: If the Sequence Initiator is the ABTS initiator and a Sequence is open, the SEQ_ID shall be the same as the last Sequence transmitted for this Exchange by the Nx_Port transmitting ABTS, even if the last Data frame has been transmitted. The SEQ_CNT shall be set to a value one greater than the previous Data frame transmitted, indicating the highest SEQ_CNT transmitted for this SEQ_ID and the highest SEQ_CNT for this range of SEQ_CNTs over multiple Sequences.

If the Sequence Initiator is the ABTS Initiator and no Sequence is open, the SEQ_ID shall be a new valid value unused at that time and the SEQ_CNT shall be either continuously increasing from the latest Data frame transmitted in the last Sequence or binary zero.

If the Sequence Recipient is the ABTS Initiator, the SEQ_ID shall be a new valid value unused at that time by that Nx_Port as a Sequence Initiator and the SEQ_CNT shall be either continuously increasing from the latest Data frame transmitted in the last Sequence or binary zero.

Payload: The Abort Sequence Basic Link Service command has no Payload.

16.3.2.3.7 Reply Sequence

BA_RJT: BA_RJT signifies rejection of the ABTS command, however, the Exchange may have been aborted without Sequence information (see 16.3.4).

BA_ACC: BA_ACC signifies that the destination Nx_Port has aborted and discarded no Sequences, one Sequence, multiple Sequences, or the entire Exchange. The BA_ACC Payload is shown in table 82.

Table 82 - BA_ACC Payload

Bits Word	31 .. 24	23 .. 16	15 .. 08	07 .. 00
0	SEQ_ID Validity 80h = valid 00h = invalid	SEQ_ID of last Sequence deliverable to ULP (if valid indicated)	Reserved	
1	OX_ID		RX_ID	
2	Low SEQ_CNT		High SEQ_CNT	

The SEQ_ID, if indicated as valid, shall be the last deliverable Sequence received from the Sequence Initiator. If the SEQ_ID is indicated as invalid, then the Sequence Recipient has no information on the last deliverable Sequence. To abort an Exchange, the Last_Sequence bit shall be set to 1 and Low SEQ_CNT shall be 00 00h and High SEQ_CNT shall be FF FFh.

The Payload is specified for each of the permitted cases:

a) to indicate that it has the information on the last deliverable Sequence, and nothing is aborted at its end, the ABTS Recipient shall set, in the BA_ACC Payload:
   A) SEQ_ID Validity = valid (80h);
   B) SEQ_ID = the SEQ_ID of the last deliverable Sequence received from the ABTS Initiator; and
   C) low SEQ_CNT = High SEQ_CNT = SEQ_CNT of ABTS frame;
b) to indicate that it has no information on the last deliverable Sequence, and it is aborting the entire Exchange, the ABTS Recipient shall set the Last_Sequence F_CTL bit to one and shall set, in the BA_ACC Payload:

A) SEQ_ID Validity = invalid (00h);

B) SEQ_ID = invalid in this case;

C) low SEQ_CNT = 00 00h; and

D) high SEQ_CNT = FF FFh;

and

c) to indicate that it has information on the last deliverable Sequence, but it is aborting the entire Exchange due to uncertainty (e.g., Sequence Initiative ownership or lack of its capability to resolve the conflict), the ABTS Recipient shall set the Last_Sequence F_CTL bit to 1 and shall set, in the BA_ACC Payload:

A) SEQ_ID Validity = valid (80h);

B) SEQ_ID = the SEQ_ID of the last deliverable Sequence received from the ABTS Initiator;

C) low SEQ_CNT = 00 00h; and

D) high SEQ_CNT = FF FFh.

16.3.3 Basic Accept (BA_ACC)

16.3.3.1 Description

BA_ACC is a single frame Link Service Reply Sequence that notifies the transmitter of a Basic Link Service Request frame that the request has been completed. The BA_ACC Link Service Reply Sequence shall transfer the Sequence Initiative by setting the Sequence Initiative bit (Bit 16) to one in F_CTL on the last Data frame of the Reply Sequence if the Sequence Initiative for the Exchange is held by the transmitter of the ABTS frame. The Sequence Initiative (Bit 16) shall be set to zero to indicate that the transmitter of the BA_ACC holds the Sequence Initiative for the Exchange. The OX_ID and RX_ID shall be set to match the Exchange in which the ABTS frame was transmitted. The SEQ_ID shall be assigned following the normal rules for SEQ_ID assignment.

16.3.3.2 Protocol

BA_ACC is the Reply Sequence to Abort Sequence Basic Link Service command.

16.3.3.3 Request Sequence

Addressing: The D_ID field designates the source of the Link Service frame being accepted while the S_ID field designates the destination of the request Data frame Sequence being accepted.

Payload: The Payload content is defined within individual Basic Link Service command (ABTS).

16.3.3.4 Reply Sequence

none

16.3.4 Basic Reject (BA_RJT)

16.3.4.1 Description

BA_RJT is a single frame Link Service Reply Sequence that notifies the transmitter of a Basic Link Service Request frame that the request has been rejected. A four-byte reason code is contained in the Payload. Basic Reject may be transmitted for a variety of conditions that may be unique to a specific Basic Link Service Request. The OX_ID and RX_ID shall be set to match the Exchange in which the Basic Link Service Request frame was transmitted. The SEQ_ID shall be assigned following the normal rules for SEQ_ID assignment.

The first error condition detected shall be the error reported.

16.3.4.2 Protocol

BA_RJT may be a Reply Sequence to ABTS.

16.3.4.3 Request Sequence

Addressing: The D_ID field designates the source of the Basic Link Service Request being rejected while the S_ID field designates the destination of the request Data frame Sequence being rejected.

Payload: The first word of the Payload shall contain four bytes to indicate the reason for rejecting the request (see table 83, table 84 and table 85).

16.3.4.4 Reply Sequence

none

Table 83 - BA_RJT Payload Format

Bits	Description
31 -24	Reserved
23 - 16	Reason Code (see table 84)
15 - 8	Reason Explanation (see table 85)
7 - 0	Vendor Unique Code

Table 84 - BA_RJT reason codes

Encoded Value (Bits 23-16)	Name	Description
01h	Invalid command code	The Command code in the Sequence being rejected is invalid.
03h	Logical error	The request identified by the Command code is invalid or logically inconsistent for the conditions present.
05h	Logical busy	The Basic Link Service is logically busy and unable to process the request at this time.
07h	Protocol error	This indicates that an error has been detected that violates the rules of FC-2 protocol that are not specified by other error codes.
09h	Unable to perform command request	The Recipient of a Link Service command is unable to perform the request at this time.
FFh	Vendor specific error (see bits 7-0)	The Vendor specific error bits may be used to specify vendor unique reason codes.
Others	Reserved	

Table 85 - BA_RJT Reason Code Explanation

Encoded Value (Bits 15-8)	Description	Applicable commands
00h	No additional explanation	ABTS
03h	Invalid OX_ID-RX_ID combination	ABTS
05h	Sequence aborted, no sequence information provided	ABTS
Others	Reserved	

16.3.5 No Operation (NOP)

16.3.5.1 Description

The NOP Basic Link Service frame shall be used with delimiters appropriate to the class in which it is being used. The Data_Field of a NOP frame shall be of zero size. However, the F_CTL field and the SOF and EOF delimiters shall be examined and the appropriate action shall be taken by both the Nx_Port and Fabric, if present. A NOP frame may be used to initiate Sequences or terminate Sequences in place of a normal Data frame when there is no Data to send.

The OX_ID and RX_ID shall be set to match the Exchange in which the NOP is being transmitted. The SEQ_ID shall be assigned following the normal rules for SEQ_ID assignment.

16.3.5.2 Protocol

a) No Operation Request; and
b) No Reply frame.

16.3.5.3 Request Sequence

Addressing: The D_ID field designates the destination of the frame while the S_ID field designates the source of the frame.

Payload: The NOP Basic Link Service command has no Payload.

16.3.5.4 Reply Sequence

none

16.3.6 Flush Exchange and verify status (FLUSH)

16.3.6.1 Overview

The FLUSH command may be transmitted by an Nx_Port to ensure all Exchange frames for a specified OX_ID/RX_ID have been received by the FLUSH Recipient, and may be used to verify the state of the Exchange. This command may be used to indicate or determine if error recovery is required. Use of this command is defined by the FC-4 (e.g., FC-NVMe-2).

16.3.6.2 Description

The FLUSH command:

a) shall only be transmitted within an open Exchange;
b) the OX_ID and RX_ID in the Frame_Header shall be associated with the open Exchange; and
c) may be transmitted even if the Nx_Port does not hold Sequence Initiative.

The FLUSH command may be issued periodically. For each FLUSH command issued, the Count field (see table 86) is incremented by one. The FLUSH Recipient shall send a FLUSH_RSP corresponding to the FLUSH command with the highest received Count value and is not required to respond to earlier FLUSH commands on the Exchange. This may occur if a prior FLUSH command was not delivered to the FLUSH Recipient.

If the HT bit in the FLUSH Payload (see table 86) is set to one, then the F_CTL bit for Sequence Initiative (i.e., bit 16) shall be set to one and the bit for End_Sequence (i.e., bit 19) shall be set to one. If the HT bit in the FLUSH Payload is set to zero, then the F_CTL bit for Sequence Initiative (i.e., bit 16) shall be set to zero (i.e., to not affect Sequence Initiative) and the F_CTL bit for End_Sequence (i.e., bit 19) shall be set to one. The FLUSH command may be transmitted as part of the last Sequence or in a new Sequence.

NOTE 36 - The F_CTL bit for Sequence Initiative (i.e., bit 16) when set to zero has a different meaning for the FLUSH command. Instead of indicating that Sequence Initiative is held, it indicates that Sequence Initiative for the Exchange is not affected by the FLUSH command.

The value of the Parameter field in the Frame_Header of a FLUSH command is described by the FC-4 (e.g., FC-NVMe-2). The F_CTL Relative offset present bit of a FLUSH command shall be set to zero.

16.3.6.3 Request Sequence

Addressing: The D_ID field designates the FLUSH Recipient Nx_Port. The S_ID field designates the FLUSH Initiator Nx_Port that is requesting Exchange verification.

X_ID: Both the OX_ID and RX_ID shall correspond to the current values of the Exchange being verified as determined by the FLUSH Initiator.

SEQ_ID and SEQ_CNT: If a Sequence is active and the Sequence Initiator is the FLUSH Initiator, the SEQ_ID shall be the same as the most recent Data frame transmitted for this Exchange. The SEQ_CNT shall be set to a value one greater than the most recent Data frame transmitted (e.g., used when a RED command is received, see 16.3.8).

If the FLUSH Initiator holds Sequence Initiative and no Sequence is active, the SEQ_ID shall be a new valid value unused at that time and the SEQ_CNT shall be either continuously increasing from the most recent Data frame transmitted by the Sequence Initiator or binary zero (see 12.10).

If the FLUSH Initiator does not hold Sequence Initiative, the SEQ_ID shall be a new valid value unused at that time by that Nx_Port as a Sequence Initiator and the SEQ_CNT shall be either continuously increasing from the most recent Data frame transmitted by the Sequence Recipient or binary zero (see 12.10).

Payload: The FLUSH Basic Link Service command payload is shown in table 86.

Table 86 - FLUSH Payload

Bits Word	31	30 .. 24	23 .. 16	15 .. 08	07 .. 00
0	HT	Reserved		Count	

HT: Halt Transmission: The HT bit is set to zero to verify the state of the Exchange. The HT bit is set to one to perform FC-4 specific error recovery on the Exchange. The Exchange Responder shall not set the HT bit to one.

If the HT bit is set to one, then the FLUSH Recipient shall:

1) halt transmit operations on the Exchange;
2) transmit a FLUSH_RSP indicating the state of the Exchange; and
3) wait for an FC-4 specific event before further processing of the Exchange.

While the FLUSH Recipient is waiting for the FC-4 specific event, the FLUSH Recipient shall continue to respond to ABTS and FLUSH commands.

If the HT bit is set to zero then the FLUSH Recipient shall:

1) complete transmission of any active Sequence on the Exchange; and
2) transmit a FLUSH_RSP indicating the state of the Exchange.

Count: This field specifies the number of times the FLUSH command has been issued by a specific Nx_Port on this Exchange. The value of the Count field shall be generated and maintained independently by the Exchange Originator and Responder. The first time this command is issued on an Exchange, the Count value shall be set to one, and the Count value shall be incremented by one each time this command is issued on the same Exchange.

16.3.6.4 Reply Sequence

FLUSH_RSP: FLUSH_RSP is the Reply Sequence for a FLUSH BLS command (see 16.3.7).

16.3.7 Flush Exchange and verify status response (FLUSH_RSP)

16.3.7.1 Description

FLUSH_RSP is a single frame Link Service Reply Sequence transmitted in response to a FLUSH command. FLUSH_RSP may be transmitted even if the Nx_Port does not hold Sequence Initiative. FLUSH_RSP may be transmitted as part of the last Sequence or in a new Sequence.

The OX_ID and RX_ID shall be set to match the Exchange in which the FLUSH command was transmitted. The SEQ_ID shall be assigned following the normal rules for SEQ_ID assignment (see 12.8). SEQ_CNT shall be assigned following the normal rules for SEQ_CNT assignment (see 12.10). The value of the Parameter field in the Frame_Header of a FLUSH_RSP is described by the FC-4 (e.g., FC-NVMe-2). The F_CTL Relative offset present bit in the Frame_Header of a FLUSH_RSP shall be set to zero.

Sequence Initiative is transferred if the FLUSH Recipient is waiting for an FC-4 specific event (i.e., WSE bit in the FLUSH_RSP Payload (see table 87) is set to one) or if the Exchange is not open (i.e., the OE bit in the FLUSH_RSP Payload is set to zero). To transfer Sequence Initiative, the F_CTL bit for Sequence Initiative (i.e., bit 16) shall be set to one and the bit for End_Sequence (i.e., bit 19) shall be set to one.

Sequence Initiative is not affected if the WSE bit in the FLUSH_RSP Payload is set to zero and the OE bit in the FLUSH_RSP Payload is set to one. To not affect Sequence Intiative the F_CTL bit for Sequence Initiative (i.e., bit 16) shall be set to zero and the F_CTL bit for End_Sequence (i.e., bit 19) shall be set to one.

> NOTE 37 - The F_CTL bit for Sequence Initiative (i.e., bit 16) when set to zero has a different meaning for FLUSH_RSP. Instead of indicating that Sequence Initiative is held, it indicates that Sequence Initiative for the Exchange is not affected by FLUSH_RSP.

If a FLUSH command is received by the FLUSH Recipient before the first Sequence of the Exchange referenced by the FLUSH command, the FLUSH Recipient shall transmit a FLUSH_RSP indicating that the Exchange is not open (i.e., the OE bit, the SIS bit, the SE bit, the WSE bit, the CAP bit, the FC4INFO field, and the FC4VALUE field are all set to zero).

Addressing: The D_ID field designates the FLUSH Initiator Nx_Port. The S_ID field designates the FLUSH Recipient Nx_Port.

Payload: The FLUSH_RSP payload is shown in table 87.

Table 87 - FLUSH_RSP Payload

Bits Word	31 .. 24	23 .. 16	15 .. 08	07 .. 00
0	Flags	FC4INFO	Count	
1	FC4VALUE			
2	Reserved			
3	Reserved			

Flags: The Flags field is defined as shown in table 88.

Table 88 - Flags Field Definition

Bits	Bit Name	Description
31	SIS	**Sequence Initiative State:** The Sequence Initiative State bit shall be set to one if the FLUSH Recipient holds Sequence Initiative for the Exchange after the FLUSH_RSP is transmitted. The SIS bit shall be set to zero if the Exchange is not open, or if the FLUSH Recipient does not hold Sequence Initiative for the Exchange after the FLUSH_RSP is transmitted.
30	OE	**Open Exchange:** The Open Exchange bit shall be set to zero if the FLUSH Recipient does not have an open Exchange for the S_ID, OX_ID, RX_ID and any other qualifiers specified by the FC-4 provided in the FLUSH command. If the RX_ID field in the FLUSH command is set to FFFFh, then the FLUSH Recipient shall not use the RX_ID field to qualify the Exchange. If the Exchange is open, the OE bit shall be set to one.
29	SE	**Sequence Error:** If the FLUSH Recipient has not detected a Sequence error for the Exchange or if the FLUSH Recipient is the Exchange Originator, then the SE bit shall be set to zero. If the FLUSH Recipient is the Exchange Responder and has detected a Sequence error for the Exchange, then the SE bit shall be set to one. If the SE bit is set to one, then the FLUSH Recipient shall: 1) transmit a FLUSH_RSP indicating the state of the Exchange; and 2) wait for an FC-4 specific event before further processing of the Exchange. While the FLUSH Recipient is waiting for the FC-4 specific event, the FLUSH Recipient shall continue to respond to ABTS and FLUSH commands. If the SE bit has been set to one in a prior FLUSH_RSP for this Exchange and a subsequent FLUSH command is received for this Exchange before the FC-4 specific event occurs, then the SE bit shall be set to one in the subsequent FLUSH_RSP.
28	WSE	**Waiting for FC-4 Specific Event:** This bit, when set to one, indicates that the FLUSH Recipient is waiting for the FLUSH Initiator to send an FC-4 specific event before further processing of the Exchange. The WSE bit shall be set to one: a) if the FLUSH command is received with the HT bit set to one; b) if the FLUSH_RSP is sent with the SE bit set to one; or c) if the WSE bit has been set to one in a prior FLUSH_RSP for this Exchange and a subsequent FLUSH command is received for this Exchange before the FC-4 specific event occurs. Otherwise, the WSE bit shall be set to zero
27	CAP	**FC-4 Capability:** The CAP field is described by the FC-4 protocol (e.g., FC-NVMe-2).
All others	Reserved	

FC4INFO: The FC4INFO field is described by the FC-4 protocol (e.g., FC-NVMe-2).

Count: The Count field shall be set to the Count value received in the FLUSH command.

FC4VALUE: The FC4VALUE field is described by the FC-4 protocol (e.g., FC-NVMe-2).

16.3.8 Responder Error Detected (RED)

16.3.8.1 Overview

The RED command may be transmitted by an Exchange Responder to indicate to the Exchange Originator that a Sequence error was detected on an open Exchange. This command shall be used only for purposes specific to an FC-4 and may be used to indicate that FC-4 specific error recovery is required.

16.3.8.2 Introduction

The RED command:

a) shall be transmitted within an open Exchange;
b) the S_ID, D_ID, OX_ID, and RX_ID in the Frame_Header shall be associated with the open Exchange;
c) shall only be transmitted by the Exchange Responder if a Sequence error was detected;
d) shall not be transmitted if this Sequence error has already been reported to the Exchange Originator in a FLUSH_RSP;
e) may be transmitted even if the Nx_Port does not hold Sequence Initiative; and
f) shall have the F_CTL bit for Sequence Initiative (i.e., bit 16) set to one and the bit for End_Sequence (i.e., bit 19) set to one.

After the Exchange Responder transmits a RED command, it shall wait for an FC-4 specific event before further processing of the Exchange. While the Exchange Responder is waiting for the FC-4 specific event, the Exchange Responder shall continue to respond to ABTS and FLUSH commands.

The RED command may be reissued until a FLUSH command or an FC-4 specific event is received for the Exchange associated with the Sequence error. If a FLUSH command is received after transmission of a RED command and before an FC-4 specific event is received, a FLUSH_RSP shall be transmitted with the OE, SE, and WSE bits set to one.

If a new Sequence error is detected on the Exchange after an FC-4 specific event is received for the Exchange, a RED command may be transmitted indicating the new Sequence error.

16.3.8.3 Request Sequence

Addressing: The D_ID field designates the RED Recipient Nx_Port. The S_ID field designates the RED Initiator Nx_Port that is transmitting the Sequence error detected notification.

X_ID: Both the OX_ID and RX_ID shall correspond to the current values as determined by the Exchange Responder. If the Exchange Initiator has not received an IU with an assigned RX_ID (i.e., an RX_ID other than FFFFh) from the Exchange Responder, then the Exchange Initiator shall not use the RX_ID field to qualify the Exchange.

SEQ_ID and SEQ_CNT: The SEQ_ID shall be a new valid value unused at that time and the SEQ_CNT shall be either continuously increasing from the most recent frame transmitted by the Exchange Responder or binary zero (see 12.10).

Payload: The RED Basic Link Service command shall have a zero size Payload.

16.3.8.4 Reply Sequence

There is no Reply Sequence for a RED command.

17 Classes of service

17.1 Scope

Classes of service are functions of the FC-2V sublevel.

17.2 Introduction

Two classes of service are specified in this standard. These classes of service are distinguished primarily by the level of delivery integrity required for an application.

A given Fabric or Nx_Port may support one or both of the following classes of service:

a) Class 2 - Multiplex; and
b) Class 3 - Datagram.

Class 2 and Class 3 may be supported with any of the three topologies.

In both classes of service, the FC-2V Segmentation and Reassembly function makes available to the receiving ULP the same image of application data as transmitted by the sending ULP (see clause 21).

In both classes of service, for each frame received, the Fabric shall do one of the following:

a) deliver only one instance of the frame to any single Nx_Port;
b) issue a F_BSY;
c) issue a F_RJT; or
d) discard the frame without issuing any response.

17.3 Class 2 - Multiplex

17.3.1 Function

This class of service provides frame delivery service with notification of non-delivery between two Nx_Ports. This class of service allows one Nx_Port to transmit consecutive frames to multiple destinations. Conversely, this class of service also allows one Nx_Port to receive consecutive frames from one or more Nx_Ports.

A Class 2 service is requested by an Nx_Port on a frame by frame basis. The Fabric, if present, routes each frame to the Nx_Port indicated by the D_ID of the frame.

NOTE 38 - The Fabric routes a Class 2 frame to its D_ID even if the D_ID is assigned to the same PN_Port from which the Fabric received the frame.

Class 2 Delimiters are used to indicate the requested service and to initiate and terminate one or more Sequences as described in 17.3.3.

17.3.2 Rules

To provide Class 2 service, the transmitting and receiving Nx_Ports, and the Fabric shall obey the following rules:

a) except as explicitly stated in FC-LS-4 for a given Link Service protocol, an Nx_Port supporting Class 2 service is required to have logged in with the Fabric and the Nx_Ports with which it intends to communicate, either explicitly or implicitly. To Login explicitly, the requesting Nx_Port shall use Fabric and N_Port Login protocols;

b) the Fabric routes the frames between communicating Nx_Ports. To obtain Class 2 service from the Fabric, the Nx_Port shall use the Class 2 Delimiters as specified in 17.3.3;

c) an Nx_Port may send consecutive frames to one or more destinations. This enables an Nx_Port to demultiplex multiple Sequences to a single or multiple destinations concurrently (see 17.3.3);

d) a given Nx_Port may receive consecutive frames from different sources. Each source may send consecutive frames for one or more Sequences;

e) a destination Nx_Port shall provide an acknowledgement to the source for each valid Data frame received. The destination Nx_Port shall use ACK for the acknowledgement (see 17.3.5). If unable to deliver ACK, the Fabric shall return a F_BSY or F_RJT;

f) the Sequence Initiator shall increment the SEQ_CNT field of each successive frame transmitted within a Sequence. However, the Fabric may not guarantee delivery to the destination in the same order of transmission (see 19.4.6);

g) an Nx_Port may originate multiple Exchanges and initiate multiple Sequences with one or more destination Nx_Ports. The Nx_Port originating an Exchange shall set the OX_ID in accord with 12.11 and the Responder of the Exchange shall set the RX_ID in accord with 12.12. The Sequence Initiator shall assign a SEQ_ID, for each Sequence it initiates in accord with 19.7.3;

h) if the Fabric is unable to deliver the frame to the destination Nx_Port, the source is notified of each frame not delivered by an F_BSY or F_RJT frame from the Fabric with corresponding D_ID, S_ID, OX_ID, RX_ID, SEQ_ID, and SEQ_CNT. The source is also notified of valid frames busied or rejected by the destination Nx_Port by P_BSY or P_RJT;

i) a busy or reject may be issued by an Fx_Port or the destination Nx_Port with a valid reason code. (see 15.3);

j) if a Class 2 Data frame is busied, the sender shall retransmit the busied frame up to the ability of the sender to retry, including zero;

k) the Credit established during Login by interchanging Service Parameters shall be honored (see 20.2.4 for more on Credit). Class 2 may share buffer-to-buffer Credit with Class 3 frames;

l) effective transfer rate between any given Nx_Port pair is dependent upon the number of Nx_Ports a given Nx_Port is demultiplexing to and multiplexing from;

m) frames within a Sequence are tracked on a Sequence_Qualifier (see 19.7.1) and SEQ_CNT (see 12.10) basis;

n) an FC_Port shall be able to recognize SOF delimiters for both classes of service, whether or not the FC_Port supports both classes of service, and provide appropriate responses for both classes of service with appropriate delimiters. An Nx_Port that supports only Class 2 shall discard Class 3 frames, while obeying the buffer-to-buffer flow control rules. An Fx_Port that supports only Class 2 shall discard Class 3 frames, while obeying the buffer-to-buffer flow control rules; and

o) the Class 2 PREF field is a class of service specific use of the CS_CTL field. When PREF is set to zero, the Fabric shall deliver the frame normally. When PREF is set to one, the Fabric may deliver the frame to the destination Nx_Port prior to frames that have PREF set to zero.

17.3.3 Delimiters

Sequences are initiated by transmitting a frame started by a SOF_{i2}. A SOF_{n2} starts subsequent frames within a Sequence. A Sequence is normally terminated with a frame ended by EOF_t. All frames other than the last frame within the Sequence are ended with an EOF_n.

17.3.4 Data_Field size

The number of bytes in the Data_Field of each frame transmitted is limited by the smaller value of the Buffer-to-Buffer Receive Data_Field Size (see FC-LS-4) of the Fabric or the Receive Data_Field Size (see FC-LS-4) of the receiving Nx_Port. Each frame is routed through the Fabric, if present, as a separate entity.

17.3.5 Flow control

All Class 2 frames shall follow both buffer-to-buffer flow control rules (see 20.4) and end-to-end flow control rules (see 20.3).

ACK frames are used to perform end-to-end flow control. ACK frames shall begin with SOF_{n2}. The ACK used to terminate a Sequence shall end with EOF_t. All ACK frames that do not terminate a Sequence shall end with EOF_n.

17.4 Class 3 - Datagram

17.4.1 Function

This class of service provides frame delivery service without any notification of non-delivery (BSY or RJT), delivery (ACK), or end-to-end flow control between two communicating Nx_Ports. The Fabric, if present, and the destination Nx_Port are allowed to discard Class 3 frames without any notification to the transmitting Nx_Port. This class of service allows one Nx_Port to transmit consecutive frames to multiple destinations. Conversely, this class of service also allows one Nx_Port to receive consecutive frames from one or more Nx_Ports.

A Class 3 service is requested by an Nx_Port on a frame by frame basis. The Fabric, if present, routes each frame to the Nx_Port indicated by the D_ID of the frame.

NOTE 39 - The Fabric routes a Class 3 frame to its D_ID even if the D_ID is assigned to the same PN_Port from which the Fabric received the frame.

Class 3 Delimiters are used to indicate the requested service and to initiate and terminate one or more Sequences as described in 17.4.3.

17.4.2 Rules

To provide Class 3 service, the transmitting and receiving Nx_Ports, and the Fabric shall obey the following rules:

a) except as explicitly stated in FC-LS-4 for a given Link Service protocol specification, an Nx_Port supporting Class 3 service is required to have logged in with the Fabric or the Nx_Ports, either explicitly or implicitly. To Login explicitly, the requesting Nx_Port shall use Fabric and N_Port Login protocols (see FC-LS-4);
b) the Fabric routes the frames between communicating Nx_Ports. To obtain Class 3 service from the Fabric, the Nx_Port shall use the Class 3 Delimiters as specified in 17.4.3;

c) a given Nx_Port may send consecutive frames to one or more destinations. This enables an Nx_Port to demultiplex multiple Sequences to single or multiple destinations concurrently;

d) a given Nx_Port may receive consecutive frames from one or more source Nx_Ports. Each source Nx_Port may send consecutive frames for one or more Sequences;

e) a destination Nx_Port shall not provide acknowledgement (ACK) to the source for any valid frame received;

f) the Sequence Initiator shall increment the SEQ_CNT field of each successive frame transmitted within a Sequence. However, the Fabric may not guarantee delivery at the receiver in the same order of transmission (see 19.4.6);

g) an Nx_Port may originate Exchanges and initiate Sequences with one or more destination Nx_Ports. The Nx_Port originating an Exchange shall set the OX_ID in accord with 12.11 and the Responder of the Exchange shall set the RX_ID in accord with 12.12. The Responder may assign an RX_ID in the first Sequence it transmits. The Sequence Initiator shall assign a SEQ_ID for each Sequence it initiates in accord with 19.7.3;

h) the local Fx_Port exercises buffer-to-buffer flow control with the transmitting Nx_Port. The remote Fx_Port exercises buffer to-buffer flow control with the receiving Nx_Port. R_RDY is used for buffer-to-buffer flow control;

i) if the Fabric is unable to deliver the frame to the destination Nx_Port, the frame is discarded and the source is not notified. If the destination Nx_Port is unable to receive the frame, the frame is discarded and the source is not notified;

j) effective transfer rate between any given Nx_Port pair is dependent upon the number of Nx_Ports a given Nx_Port is demultiplexing to and multiplexing from;

k) neither the Fx_Port nor Nx_Port shall issue busy or reject to Class 3 frames;

l) frames within a Sequence are tracked on a Sequence_Qualifier (see 19.7.1) and SEQ_CNT (see 12.10) basis;

m) an Nx_Port or Fx_Port shall be able to recognize SOF delimiters of both classes of service, whether or not the Nx_Port or Fx_Port supports both classes of service, and provide appropriate responses for both classes of service with appropriate delimiters. An Nx_Port that supports only Class 3 shall issue a P_RJT for Class 2 frames with appropriate Class 2 delimiters while obeying the buffer-to-buffer flow control rules. An Fx_Port that supports only Class 3 shall issue a F_RJT for Class 2 frames with appropriate Class 2 delimiters, while obeying the buffer-to-buffer flow control rules;

n) an Nx_Port may obtain the delivery status of Class 3 Sequences transferred by using Abort Sequence protocol (see 22.5.5.2.2) and thus verify the integrity of the delivered Sequences; and

o) the Class 3 PREF field is a class specific use of the CS_CTL field. When PREF is set to zero, the Fabric shall deliver the frame normally. When PREF is set to one, the Fabric may deliver the frame to the destination Nx_Port prior to frames that have PREF set to zero.

17.4.3 Delimiters

Sequences are initiated by transmitting a frame started by a SOF_{i3}. A SOF_{n3} starts subsequent frames within a Sequence. A Sequence is terminated with a Data frame ended by EOF_t. An EOF_n terminates all frames other than the last frame within the Sequence.

17.4.4 Data_Field size

The number of bytes in the Data_Field of each frame transmitted is limited by the smaller value of the Buffer-to-Buffer Receive Data_Field Size (see FC-LS-4) of the Fabric or the Receive Data_Field Size (see FC-LS-4) of the receiving Nx_Port. Each frame is routed through the Fabric, if present, as a separate entity.

17.4.5 Flow control

All Class 3 frames shall follow buffer-to-buffer flow control rules (see 20.4). Class 3 frames are not subject to end-to-end flow control (see 20.3).

17.4.6 Sequence integrity

With a missing Class 3 Data frame, the Sequence Recipient is capable of detecting the error of non-receipt of the frame, but has no method to communicate it to the Sequence Initiator due to absence of ACK in Class 3. However, using Abort Sequence protocol (see 19.4.11 and 22.5.5), the Sequence Initiator may verify if one or more transmitted Sequences were received without any Sequence error. This usage of Abort Sequence protocol makes it possible to verify the integrity of Class 3 Sequences delivered.

If a sending ULP relies on the receiving ULP for ensuring Sequence integrity, the Sequence Initiator may not use the Abort Sequence protocol to confirm Sequence delivery.

18 Name_Identifier Formats

18.1 Scope

Name_Identifier Formats are functions of the FC-2V sublevel.

18.2 Introduction

Name_Identifiers are used to identify entities in Fibre Channel such as an N_Port, node, F_Port, Fabric or other Fibre Channel objects. The Name_Identifier for an entity shall be unique within the Fibre Channel interaction space.

The Name_Identifier format is specified in table 89.

Table 89 - Name_Identifier format

Bits Word	31 .. 28	27 .. 24	23 .. 16	15 .. 08	07 .. 00
0	NAA	Name Value			
1	Name Value				

The NAA field specifies the NAA identifier format and length. A list of supported the NAA identifier formats is specified in table 90.

Table 90 - NAA identifiers

Words 0, bits 31 - 28	NAA	Length (bits)	Reference
0h	Name not present	-	table 89
1h	IEEE 48-bit Address	64	18.3
2h	IEEE Extended	64	18.4
3h	Locally Assigned	64	18.5
4h	Reserved		
5h	IEEE Registered	64	18.6
6h	IEEE Registered Extended	128	18.7
7h to Bh	Reserved		
Ch	EUI-64 Mapped	64	18.8
Dh	EUI-64 Mapped	64	18.8
Eh	EUI-64 Mapped	64	18.8
Fh	EUI-64 Mapped	64	18.8

An NAA field value of "Name not present” (0h) indicates that the Name Value field does not contain a valid Name_Identifier, and shall be ignored.

18.3 IEEE 48-bit Address

When the Name_Identifier format is IEEE 48-bit Address, the name value field shall contain an ELI-48 or EUI-48 (EI-48). The ELI-48 or EUI-48 shall be represented as an ordered string of six bytes numbered from 0 to 5.

Table 91 shows how the bytes of an ELI-48 or EUI-48 shall be mapped to two words in the Name_Identifier.

An IEEE 48-bit Address Name_Identifier is a Worldwide_Name.

Table 91 - NAA IEEE 48-bit Address Name_Identifier format

Bits Word	31 .. 28	27 .. 24	23 .. 16	15 .. 08	07 .. 00
0	1h	0 00h		EI-48 Byte 0	EI-48 Byte 1
1	EI-48 Byte 2		EI-48 Byte 3	EI-48 Byte 4	EI-48 Byte 5

Example -

A company has an EUI-48 of:

AC DE 48 00 00 80h

Using this EUI-48, the following 64-bit Fibre Channel IEEE 48-bit Address Name_Identifier is created:

10 00 AC DE 48 00 00 80h

18.4 IEEE Extended

When the Name_Identifier format is IEEE Extended, the name value field shall contain an ELI-48 or EUI-48 (EI-48) by a 12-bit value that is an extension to the company assigned address portion of the ELI-48 or EUI-48 that shall form a unique 60-bit value. This format is described in table 92.

An IEEE Extended Name_Identifier is a Worldwide_Name.

Table 92 - NAA IEEE Extended Name_Identifier format

Bits Word	31 .. 28	27 .. 24	23 .. 16	15 .. 08	07 .. 00
0	2h	Vendor Specific		EI-48 Byte 0	EI-48 Byte 1
1	EI-48 Byte 2		EI-48 Byte 3	EI-48 Byte 4	EI-48 Byte 5

Example -

A company has an EUI-48 of:

AC DE 48 00 00 80h

Using this EUI-48 and a vendor specified value of B17h, the following 64-bit Fibre Channel IEEE Extended Name_Identifier format is created:

2B 17 AC DE 48 00 00 80

18.5 Locally Assigned

When the Name_Identifier format is locally assigned, the name value field shall be assigned in a manner determined by the administration of the Fabric in which it is assigned. This format is described in table 93.

A locally assigned Name_Identifier shall be unique within the Fibre Channel interaction space wherein it is assigned.

Table 93 - NAA Locally Assigned Name_Identifier format

Bits Word	31 .. 28	27 .. 24	23 .. 16	15 .. 08	07 .. 00
0	3h	Locally administered value			
1	Locally administered value				

18.6 IEEE Registered

When the Name_Identifier format is IEEE Registered, the name value field shall contain an AOI followed by a 36-bit unique vendor specified identifier (VSID). This format is described in table 94.

An IEEE Registered Name_Identifier is a Worldwide_Name.

Table 94 - NAA IEEE Registered Name_Identifier format

Bits Word	31 .. 28	27 .. 24	23 .. 16	15 .. 8	07 .. 04	03 .. 00
0	5h	AOI				VSID (35-32)
1	VSID (31-0)					

Example -

A company has an AOI value:

AC DE 48h

The VSID value selected by the identified company is B 17 34 F6 2Dh.

The resulting Fibre Channel IEEE Registered format is:

5A CD E4 8B 17 34 F6 2Dh

18.7 IEEE Registered Extended

When the Name_Identifier format is IEEE Registered Extended, the name value field shall contain an AOI followed by a 36-bit unique vendor specified id (VSID). An additional 64-bit vendor specified identifier extension (VSID Extension) is defined. Name_Identifiers that identify Fibre Channel nodes or FC_Ports are limited to 64 bits and therefore shall not use the IEEE Registered Extended format. Fibre Channel FC-4 applications may extend IEEE Registered format Fibre Channel Name_Identifiers by concatenating the VSID extension field to construct IEEE Registered Extended format identifiers specific to the FC-4 application. The format of IEEE Registered Extended is described table 95.

An IEEE Registered Extended Name_Identifier is a Worldwide_Name.

Table 95 - NAA IEEE Registered Extended Name_Identifier format

Bits Word	31 .. 28	27 .. 24	23 .. 16	15 .. 8	07 .. 04	03 .. 00
0	6h	AOI				VSID (35-32)
1	VSID (31-0)					
2	VSID Extension (63-32)					
3	VSID Extension (31-0)					

Example -

A company has an AOI value:

AC DE 48h

The VSID value selected by the identified company is B 17 34 F6 2Dh and the VSID extension is 12 34 56 78 90 AB CD EFh.

The resulting Fibre Channel IEEE Registered Extended format is:

6A CD E4 8B 17 34 F6 2D 12 34 56 78 90 AB CD EFh

18.8 EUI-64 Mapped

When the Name_Identifier format is EUI-64 Mapped, the NAA field shall contain either 0Ch, 0Dh, 0Eh, or 0Fh. The other bytes (i.e., the EUI bytes) in an EUI-64 Mapped Name_Identifier shall contain mapped values from an EUI-48 or EUI-64 (see the IEEE-SA Registration Authority identifiers tutorial).

The EUI-64 Mapped Name_Identifier uses the following modifications to specified formats in order to preserve all the unique bits in an EUI-64:

a) two bits of the NAA field are used to contain part of the EUI-64 identifier; and
b) two bits that are known to contain zeros are removed from the EUI-64 identifier, specifically:
   A) the low order bit of the first byte (i.e., the Individual/Group bit if the byte is contained in a MAC Address, and the M bit in the "Structure of an OUI" figure in the IEEE-SA Registration Authority identifiers tutorial); and

B) B) the second lowest order bit of the first byte (i.e., the Universal/Local bit if the byte is contained in a MAC Address, and the X bit in the "Structure of an OUI" figure in the IEEE-SA Registration Authority identifiers tutorial).

In this way, the requirements in this standard for a four-bit NAA field in each 64-bit a Name_Identifier are met through the modified usage of two bits in the NAA field and removal of two bits that are always zero in the EUI-64 identifier that is being mapped to a Name_Identifier.

When creating EUI-64 Mapped Name_Identifier values EUI-64, EUI-48, or MAC Address use as inputs shall conform to the requirements in the IEEE-SA Registration Authority identifiers tutorial.

NOTE 40 - The use of some of the Company_IDs provided before January 2014 as 24-bit OUIs in the IEEE-SA Registration Authority identifiers tutorial result in EUI-64s and EUI-48s that have the necessary two zero bits as described in this subclause. As a result, these EUI-64s and EUI-48s are able to be processed as described in this subclause.

The format of EUI-64 Mapped Name_Identifier is described in table 96.

An EUI-64 Mapped Name_Identifier is a Worldwide_Name.

Table 96 - NAA EUI-64 Mapped Name_Identifier Format

Bits Word	31 .. 30	29 .. 24	23 .. 16	15 .. 8	7 .. 0
0	11b	EUI byte 0 [a]	EUI bytes 1-3		
1	EUI bytes 4-7				

[a] Bits 7-2 only, bits 0 and 1 are discarded.

Table 97 shows how an EUI-64 is converted to an NAA EUI-64 Mapped Name_Identifier and then back to an EUI-64.

Table 97 - EUI-64 conversions to and from an NAA EUI-64 Mapped Name_Identifier

Byte Position	Bit Position	Input EUI-64	Name_ Identifier	Restored EUI-64
0	7	EUI 63	1b	EUI 63
	6	EUI 62	1b	EUI 62
	5	EUI 61	EUI 63	EUI 61
	4	EUI 60	EUI 62	EUI 60
	3	EUI 59	EUI 61	EUI 59
	2	EUI 58	EUI 60	EUI 58
	1	EUI 57 [a]	EUI 59	0b [a]
	0	EUI 56 [b]	EUI 58	0b [b]
1	7-0	EUI 55-48		
2	7-0	EUI 47-40		
3	7-0	EUI 39-32		
4	7-0	EUI 31-24		
5	7-0	EUI 23-16		
6	7-0	EUI 15-8		
7	7-0	EUI 7-0		

[a] Universal/Local bit in a MAC Address, discarded in creation of the Name_Identifier and restored as 0b.

[b] Individual/Group bit in a MAC Address, discarded in creation of the Name_Identifier and restored as 0b.

Table 98 shows how an EUI-48 is converted to an NAA EUI-64 Mapped Name_Identifier and then back to an EUI-48.

Table 98 - EUI-48 conversions to and from an NAA EUI-64 Mapped Name_Identifier

Byte Position	Bit Position	Input EUI-48 [a]	Name_ Identifier	Restored EUI-48 [a]
0	7	EUI 47	1b	EUI 47
	6	EUI 46	1b	EUI 46
	5	EUI 45	EUI 47	EUI 45
	4	EUI 44	EUI 46	EUI 44
	3	EUI 43	EUI 45	EUI 43
	2	EUI 42	EUI 44	EUI 42
	1	EUI 41 [b]	EUI 43	0b [b]
	0	EUI 40 [c]	EUI 42	0b [c]
1	7-0	EUI 39-32		
2	7-0	EUI 31-24		
3	7-0	EUI 23-16		
4	7-0	EUI 15-8		
5	7-0	EUI 7-0		
6	7-0	n/a	00h	n/a
7	7-0	n/a	00h	n/a

[a] This is equally applicable to a MAC Address.
[b] Universal/Local bit in a MAC Address, discarded in creation of the Name_Identifier and restored as 0b.
[c] Individual/Group bit in a MAC Address, discarded in creation of the Name_Identifier and restored as 0b.

19 Exchange, Sequence, and sequence count management

19.1 Scope

Exchange, Sequence, and sequence count management are functions of the FC-2V sublevel.

19.2 Introduction

19.2.1 Data frame transfer

Transfer of information between two Nx_Ports is based on transmission of:

1) a Data frame by a source Nx_Port; and
2) in Class 2 only, an ACK response frame by the Nx_Port receiving the Data frame, to acknowledge Data frame delivery.

19.2.2 Frame identification

D_ID, S_ID, SEQ_ID, SEQ_CNT, and Sequence Context (see clause 12) uniquely identify a single frame. The OX_ID and RX_ID fields (collectively defined as X_ID, see 19.6.4) may be used by a Sequence Initiator or Recipient Nx_Port to provide a locally assigned value that may be used in place of S_ID, D_ID, and SEQ_ID to identify frames in a non-streamed Sequence or when only one Sequence is open. When Sequences are streamed, or more than one Sequence is open, the X_ID field may be used in place of the S_ID and D_ID to identify the Sequence Initiator and Recipient Nx_Ports associated with a specific frame. The X_ID field may also be used in conjunction with S_ID, D_ID, or SEQ_ID to relate one or more Sequences to actions initiated by Upper Level Protocols.

19.2.3 Sequence

A Sequence is a set of one or more related Data frames transmitted unidirectionally from one Nx_Port to another Nx_Port within an Exchange. The relationship between Sequences and Exchanges is shown in figure 80. In Class 2 an ACK_1 frame is transmitted in response to each Data frame or a single ACK_0 is transmitted for all Data frames of a Sequence. A Sequence is assigned a SEQ_ID by the Sequence Initiator. A Sequence shall only be initiated when an Nx_Port holds the Sequence Initiative for a given Exchange.

19.2.4 Streamed Sequences

This standard allows an Nx_Port to initiate a new Sequence for the same Exchange while it already has Sequences open for that Exchange. The new Sequence is termed a streamed Sequence. See 12.8 for more information regarding the assignment of SEQ_IDs for additional rules when streaming Sequences.

19.2.5 SEQ_CNT

Each frame within a Sequence contains a SEQ_CNT that represents the sequential number of each Data frame within one or multiple Sequences transmitted by an Exchange Originator or Responder. In Class 2, an ACK response frame contains a SEQ_CNT that is set equal to the Data frame SEQ_CNT to which it is responding.

19.2.6 Exchange

An Exchange is the fundamental mechanism for coordinating the interchange of information and data between two Nx_Ports. All Data transmission shall be part of an Exchange. This discusses Exchanges between Nx_Ports. This standard does not address the means to manage Exchanges across multiple Nx_Ports within a node.

An Exchange is a set of one or more related Sequences. All frames within an Exchange are delivered in order. In the case of a change in a Fabric topology (e.g., a link is removed from or is introduced into a Fabric topology), in order delivery may be temporarily suspended and out of order delivery may occur (see Annex E). Sequences for the same Exchange may flow in the same or opposite direction between a pair of Nx_Ports but not simultaneously (i.e., Data flows in one direction at a time within an Exchange for a single Nx_Port pair). An Exchange may be unidirectional or bi-directional. Within a single Exchange only one Sequence shall be active at any given time for a single initiating Nx_Port (i.e., a Sequence Initiator shall complete transmission of Data frames for a Sequence before initiating another Sequence for the same Exchange).

Unless stated otherwise by the upper level, Class 3 Sequences shall not be transmitted in the same Exchange with Class 2 Sequences. The ability to send or receive Class 3 Sequences in the same Exchange as Class 2 Sequences is not a requirement of this standard. A Sequence Initiator shall not stream Sequences that are in different classes of service.

NOTE 41 - In Class 2, when Sequences are streamed, a Recipient Nx_Port may see multiple active Sequences for the same Initiator because of out of order delivery.

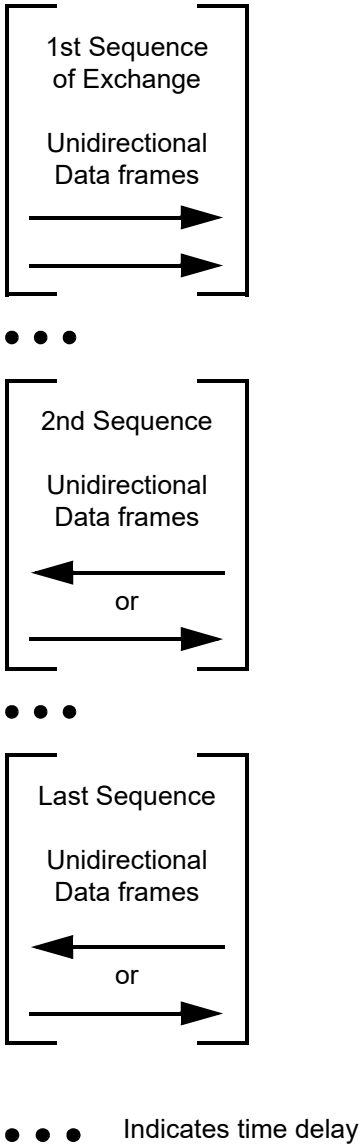

Figure 80 - Exchange - Sequence relationship

The Sequence Initiator shall use continuously increasing SEQ_CNT if Sequences are streamed. If the Sequence Initiator does not stream Sequences, it may also use continuously increasing SEQ_CNT to allow the Sequence Recipient to track delivery order.

In the Discard multiple Exchange Policy, the Sequence Recipient shall deliver consecutive Sequences within an Exchange in the order transmitted. The Sequence Recipient shall preserve transmission order from one Sequence to the next even if the Sequence Initiator does not use continuously increasing SEQ_CNT. Should frames arrive out of order, the Sequence Recipient may delay transmission of the last ACK until the order is re-established.

An Exchange is assigned an OX_ID by the Originator and an RX_ID by the Responder. When an Exchange is originated, there is a binding of resources in both the Originator and Responder.

An Exchange Status Block exists throughout the life of an Exchange and is located by using one or more fields of the Sequence_Qualifier (e.g., an Nx_Port's X_ID).

19.2.7 Sequence Initiative

The Exchange Originator is the Initiator of the first Sequence of the Exchange and holds the initiative to transmit Sequences. At the end of each Sequence of the Exchange, the Initiator of the Sequence may transfer the initiative to transmit the next Sequence to the other Nx_Port, or it may retain the initiative to transmit the next Sequence.

19.3 Applicability

FC-2V manages:

a) opening and closing of Exchanges;
b) initiation and termination of Sequences;
c) assignment of X_IDs;
d) Sequence Initiative;
e) assignment of SEQ_IDs;
f) Segmentation and Reassembly;
g) Sequences;
h) SEQ_CNT of frames; and
i) detection of frame Sequence errors.

In addition to the above, for Class 2 FC-2V manages notification of frame Sequence errors.

For Class 2, the Sequence Initiator shall assign SEQ_IDs from 0 to 255. The Sequence Recipient assigns the SEQ_ID to an available Recipient Sequence Status Block.

For Class 3, the Sequence Initiator shall assign SEQ_IDs from 0 to 255.

19.4 Exchange rules

19.4.1 Exchange management

The following rules apply to Exchange management:

a) over the life of an Exchange, the Sequence Recipient shall deliver Data to FC-4 or an upper level on a Sequence basis;
b) in the Discard multiple Sequences Error Policy, each Sequence shall be delivered in the order in which the Sequence was transmitted relative to other Sequences transmitted for the Exchange;
c) in the Discard multiple Sequences Error Policy, a Sequence shall be deliverable if the Sequence completes normally and the previous Sequence, if any, is deliverable;
d) in the Discard a single Sequence Error Policy, each Sequence shall be delivered in the order in which the Sequence was received relative to other Sequences received for the Exchange;

e) in the Discard a single Sequence Error Policy, a Sequence shall be deliverable if the Sequence completes normally without regard to the deliverability of other Sequences within the same Exchange;

f) in all discard policies, a Sequence is complete with regard to Data content if all valid Data frames for the Sequence were received without rejectable errors being detected;

g) in Process policy with infinite buffers in Class 3, a sequence is complete if a frame of another sequence is received or E_D_TOV expires before the last frame of the current sequence is received; and

h) the ordering relationship and deliverability of Sequences between two separate Exchanges is outside the scope of this standard. Certain specific cases of Basic Link Services and Extended Link Services do, however, specify collision cases (e.g., FLOGI, PLOGI, and RSI).

19.4.2 Exchange origination

The following rules apply to Exchange origination:

a) an Exchange being originated for ELSs before Login is complete or for the purpose of Login shall follow default Login parameters and special ELSs rules specified in FC-LS-4;

b) a new Exchange, other than ELSs, may be originated if three conditions are met:

   A) the originating Nx_Port has performed Login with the destination Nx_Port;

   B) the originating Nx_Port has an OX_ID and Exchange resources available for use; and

   C) the originating Nx_Port is able to initiate a new Sequence;

c) each frame within the first Sequence of an Exchange shall set the First_Sequence F_CTL bit to one;

d) the first frame of the first Sequence of the Exchange shall specify the Error Policy for the Exchange in F_CTL bits 5-4 of the Frame_Header. The Exchange Error Policy shall be consistent with the error policies supported by both the Originator and Responder;

e) the Originator shall transmit the first Data frame of the Exchange with its assigned OX_ID and an unassigned RX_ID of FF FFh;

f) if the Responder requires X_ID interlock (Login), the Originator (and Sequence Initiator) shall not transmit additional Data frames for this Exchange until the ACK to the first frame of the Exchange is received. The RX_ID in the ACK frame shall be used in subsequent frames of the Exchange;

g) if the Responder (Login) does not require X_ID interlock, the Originator may transmit additional frames of the Sequence. In Class 2, the Responder shall return its X_ID no later than in the ACK corresponding to the last Data frame of the Sequence. The next Sequence of the Exchange shall contain both the OX_ID and RX_ID assigned in the previous Sequence;

h) in Class 2, the Sequence Initiator shall receive at least one ACK from the Recipient before the Initiator attempts to initiate subsequent Sequences for the Exchange; and

i) the rules specified in Sequence initiation and termination specify the method for assigning X_IDs.

19.4.3 Sequence delimiters

For a more complete description of Data frame and Link_Control delimiters see tables 66 and 70. The following rules summarize the management of frame delimiters within a Sequence:

a) A Sequence shall be initiated by transmitting the first frame with a SOF_{ix};

b) Intermediate frames within a Sequence shall be transmitted with SOF_{nx} and EOF_{n}; and

c) The Sequence shall be complete when an EOF_t has been transmitted or received for the appropriate SEQ_ID and all previous Data frames and ACKs (if any) have been accounted for by the Initiator and Recipient, respectively.

19.4.4 Sequence initiation

The following rules apply to Sequence initiation:

a) a new Sequence may be initiated if three conditions are met:
   A) the initiating Nx_Port holds the initiative to transmit (Sequence Initiative);
   B) the initiating Nx_Port has a SEQ_ID available for use; and
   C) the total number of active Sequences initiated by the initiating Nx_Port with the Recipient Nx_Port does not exceed any of the following:
      a) total concurrent Sequences (see FC-LS-4);
      b) concurrent Sequences per class (see FC-LS-4); and
      c) open Sequences per Exchange (see FC-LS-4);
b) a SOF_{ix} shall start the first Data frame of the Sequence;
c) the Sequence Initiator shall assign a SEQ_ID. If the SEQ_ID unique per Exchange bit (see FC-LS-4) is set to zero in the PLOGI request or PLOGI LS_ACC, then the SEQ_ID shall have a value that is unique among all concurrently open Sequences between the Sequence Initiator and the Sequence Recipient, independent of the X_ID. If the SEQ_ID unique per Exchange bit is set to one in the PLOGI request and PLOGI LS_ACC, then the SEQ_ID shall have a value that is unique among all concurrently open Sequences with the same X_ID. The SEQ_ID shall not match the last SEQ_ID transmitted by the Sequence Initiator for this Exchange for the current Sequence Initiative. For streamed Sequences for the same Exchange, the Sequence Initiator shall use X+1 different subsequent SEQ_IDs where X is the number of open Sequences per Exchange so that the Exchange Status Block contains status of the last deliverable Sequence;
d) the Sequence Initiator shall not initiate the (X+1)th streamed Sequence until the first Sequence status is known (e.g., if X = 3 and the Sequence Initiator transmits SEQ_ID = 3, then 4, then 7, it shall not initiate another Sequence for the same Exchange until it resolves the completion status of SEQ_ID = 3, regardless of the completion status of SEQ_ID = 4 or 7);
e) the Sequence_Qualifier shall be unique until an open Sequence is ended normally or until the Recovery_Qualifier is determined by the Abort Sequence Protocol (ABTS);
f) in Class 2 and 3, each Data frame of the Sequence shall be limited in size to the lesser of the Fx_Port and destination Nx_Port capabilities as specified by Login;
g) sequence status shall be associated with the Exchange in which the Sequence is being transmitted; and
h) frame transmission shall follow Flow Control Rules specified in clause 20.

19.4.5 Sequence management

The Sequence Recipient and the Sequence Initiator shall verify that frames received for a Sequence adhere to the items listed. If the Sequence Recipient determines that one of the following conditions is not met in Class 2, it shall transmit a P_RJT. If the Sequence Initiator determines that one of the following conditions is not met, it shall abort the Sequence (Abort Sequence Protocol).

a) each frame shall contain the assigned SEQ_ID, OX_ID, and RX_ID values;
b) FF FFh shall be used for unassigned X_ID values;
c) each frame shall indicate the Exchange context;

d) each frame shall indicate the Sequence context;
e) each frame shall contain a SEQ_CNT that follow the rules as defined in 19.4.6;
f) frame transmission shall follow Flow Control Rules as defined in clause 20;
g) the Data_Field size of each frame of the Sequence shall be less than or equal to the maximum allowable Data_Field size for the type of frame indicated by the SOF delimiter (see 17.3.4 and 17.4.4);
h) a Sequence shall be transmitted in one class; or
i) each Data frame in a Sequence shall be transmitted within an E_D_TOV timeout period of the previous Data frame transmitted within the same Sequence. Otherwise, a Sequence timeout shall be detected.

19.4.6 SEQ_CNT

Within a Data frame Sequence, SEQ_CNT is used to identify each Data frame for verification of delivery and transmission order. The following rules specify the SEQ_CNT of each frame of a Sequence:

a) the SEQ_CNT of the first Data frame of the first Sequence of the Exchange transmitted by either the Originator or Responder shall be binary zero;
b) the SEQ_CNT of each subsequent Data frame within the Sequence shall be incremented by one from the previous Data frame;
c) the SEQ_CNT of the first Data frame of a streamed Sequence shall be incremented by one from the last Data frame of the previous sent Sequence;
d) the SEQ_CNT of the first Data frame of a non-streamed Sequence may be incremented by one from the last Data frame of the previous sent Sequence or may be zero;
e) the SEQ_CNT of each Link_Response in Class 2 shall be set to the SEQ_CNT of the Data frame to which it is responding;
f) the SEQ_CNT of each ACK_1 frame in Class 2 shall be set to the SEQ_CNT of the Data frame to which it is responding. See 20.3.3.3 for ACK_1 rules;
g) the SEQ_CNT of each ACK_0 frame in Class 2 shall be set to the SEQ_CNT of the last Data frame transmitted (End_Sequence = 1) for the Sequence. See 20.3.3.2 for ACK_0 rules;
h) if infinite buffers and ACK_0 is being used for Sequences in which the SEQ_CNT may wrap, frame uniqueness is not being ensured (See 20.3.3.2 and FC-LS-4 for ACK_0 rules); and
i) within an acknowledged class of service, the SEQ_CNT of any frame shall not be reused until that frame is acknowledged.

19.4.7 Normal ACK processing

The following rules apply to normal ACK processing:

a) based on N_Port Login parameters (Initiator support indicated in Initiator Control and Recipient support in Recipient Control in Class Service Parameters), if both Nx_Ports support multiple ACK forms, ACK_0 usage shall take precedence over ACK_1. ACK_0 use may be asymmetrical between two Nx_Ports (see FC-LS-4);
b) mixing ACK forms in a Sequence is not allowed;
c) ACK_0 may be used for both Discard and Process Error Policies. A single ACK_0 per Sequence shall be used to indicate successful Sequence delivery or to set Abort Sequence Condition bits to a value other than 00b. ACK_0 shall not participate in end-to-end Credit management. An additional ACK_0 shall be used within a Sequence to perform X_ID interlock;

d) ACK frames may be transmitted in the order in which the Data frames are processed and need not be transmitted in SEQ_CNT order, however, the History bit (bit 16) of the Parameter Field shall indicate transmission status of previous ACK frame transmission for the current Sequence;

e) the final ACK of a Sequence shall be terminated with EOF_t and shall be transmitted according to the rules for normal Sequence completion in the absence of detected errors;

f) ACK_1 or ACK_0 shall be transmitted during X_ID interlock (see 19.6.5);

g) if a Sequence Recipient receives a Data frame in Class 2 that falls within the SEQ_CNT range of a Recovery_Qualifier, it shall discard the Data_Field of the frame and shall not deliver the Payload. The Sequence Recipient may transmit an ACK for the corresponding Data frame;

h) if a Sequence Initiator receives an ACK for a Data frame in Class 2 that falls within the SEQ_CNT range of a Recovery_Qualifier, it shall discard and ignore the ACK frame;

i) see 20.3.3.2 and 20.3.3.3 for the role of acknowledgement frames (ACK) in flow control; and

j) each ACK shall be transmitted within an E_D_TOV timeout period of the event that prompts the initiative to transmit an ACK frame (i.e., when using ACK_1, it shall be transmitted within E_D_TOV of the Data frame reception, and when using ACK_0, it shall be transmitted within E_D_TOV of receiving the last Data frame of the Sequence).

19.4.8 Normal Sequence completion

The following rules apply to normal Sequence completion:

a) the Last Data frame of a Sequence shall be indicated by setting the F_CTL End_Sequence bit (F_CTL Bit 19) to one;

b) an Exchange Event shall be defined when the End_Sequence bit (Bit 19) = 1, and any of the following F_CTL bits are set as indicated:

   A) Sequence Initiative (Bit 16) = 1; or

   B) Last Sequence (Bit 20) = 1;

c) a Sequence Event shall be defined when the End_Sequence bit (Bit 19) = 1 in the absence of an Exchange Event;

d) in Class 2 the Sequence Initiator shall consider a Sequence as deliverable (to the ULP) and complete when it receives the final ACK for the Sequence (ACK with EOF_t delimiter). However, the Sequence Initiator shall account for all ACKs before reusing the SEQ_ID for this Exchange;

e) for Class 3 Sequences, this standard provides no deliverability guarantees;

f) a Class 2 Sequence shall be considered complete by the Sequence Recipient if:

   A) all Data frames are received;

   B) no Sequence errors are detected; and

   C) acknowledgements, if any, prior to acknowledgment of the last Data frame received have been transmitted;

g) a Class 3 Sequence shall be considered complete by the Sequence Recipient if:

   A) all Data frames are received;

   B) no Sequence errors are detected; and

   C) an EOF_t terminates the last Data frame;

h) in Class 2, if the last Data frame (End_Sequence = 1) transmitted is the last Data frame received for the Sequence, or if the last Data frame (End_Sequence = 1) received indicates an Exchange event (item b), the Sequence Recipient shall transmit an ACK frame (i.e., ACK_1 or ACK_0) with EOF_t in response to the last Data frame of the Sequence (i.e., End_Sequence bit in F_CTL = 1) when the Sequence is deliverable. The End_Sequence bit in F_CTL of the ACK shall be set to one. A Sequence is deliverable:

A) in Discard multiple Sequences Error Policy, when all preceding ACK frames have been transmitted and the previous Sequence, if any, is deliverable; and

B) in Discard a single Sequence Error Policy, when all preceding ACK frames have been transmitted without regard to a previous Sequence;

i) in Class 2, if a frame with the End_Sequence bit set to one is received, and this frame causes a Sequence Event, and not all frames of the Sequence have been received, the Sequence Recipient may either:

A) withhold transmission of the ACK corresponding to the Data frame with the End_Sequence bit set to one until all previous ACKs have been transmitted and the Sequence is deliverable; or

B) transmit the ACK corresponding to the Data frame with the End_Sequence bit set to one. This ACK shall have EOF_n and the End_Sequence bit set to zero. When the last missing Data frame of the Sequence is received and the Sequence is deliverable, the Sequence Recipient shall transmit an ACK with EOF_t, the End_Sequence bit set to one, and the SEQ_CNT and other fields that match the last missing Data frame of the Sequence;

j) in Class 2, the Sequence Initiator shall transmit the last Data frame with an EOF_n;

k) in Class 3 the Sequence Initiator shall transmit the last Data frame with an EOF_t;

l) in the last Data frame of a Sequence, the Sequence Initiator shall set the:

A) Sequence Initiative bit in F_CTL to 0 to hold or not affect Sequence Initiative (see 12.7.8); or

B) Sequence Initiative bit in F_CTL to 1 to transfer Sequence Initiative;

m) in Class 2, the Sequence Initiative is considered to be passed to the Sequence Recipient when the Sequence Initiator receives the final ACK (EOF_t) of the Sequence with the Sequence Initiative bit = 1; and

n) Sequence status in the Exchange Status Block is available until X+2 Sequences have been completed (where X is the number of open Sequences per Exchange supported by the Sequence Recipient as specified during Login) or the Exchange is terminated.

19.4.9 Detection of missing frames

The following methods of detecting missing frames apply to a non-streamed Sequence or multiple streamed Sequences with continuously increasing SEQ_CNT:

a) with out of order delivery, a potentially missing Data frame is detected if a frame is received with a SEQ_CNT that is not one greater than the previously received frame, except when a SEQ_CNT wrap to zero occurs. If the potentially missing Data frame is not received within the E_D_TOV timeout period, a missing frame error is detected;

b) in Class 2, with in order delivery, a potentially missing Data frame is detected if a frame is received with a SEQ_CNT that is not one greater than the previously received frame, except when a SEQ_CNT wrap to zero occurs. If the potentially missing Data frame is not received within the E_D_TOV timeout period, a missing frame error is detected;

NOTE 42 - With in order delivery, a Class 2 frame may be delivered with its SEQ_CNT that is not one greater than the previously received frame, if a Class 2 frame that was transmitted earlier has been issued F_BSY or F_RJT. This frame is potentially missing, since it may be retransmitted.

c) in Class 3, with in order delivery, a missing Data frame is detected if a frame is received with a SEQ_CNT that is not one greater than the previously received frame, except when a SEQ_CNT wrap to zero occurs; and

d) a Sequence Recipient may also detect missing Data frames through the use of a missing frame window. The size of the missing frame window, W, is set by the Sequence Recipient and is not specified by this standard. A frame is considered missing by a Sequence Recipient if its SEQ_CNT

is less than the highest SEQ_CNT received for that Sequence minus W. It is suggested that W be at least equal to End-to-end Credit.

NOTE 43 - Fabric characteristics should be taken into account when attempting to establish a missing frame window - W. Too small a value may give false errors, whereas too large a value may create out of Credit conditions.

When a missing frame error is detected, the expected SEQ_CNT is saved in the Error SEQ_CNT field of the appropriate Sequence Status Block and a Sequence error is posted in the S_STAT field in the same Sequence Status Block for a given Exchange (OX_ID, RX_ID). Only the first error is saved.

19.4.10 Sequence errors - Class 2

19.4.10.1 Rules common to all discard policies

Either the Sequence Initiator or the Sequence Recipient may detect errors within a Sequence.

In discard policy, the Recipient shall discard the Data_Field portion of Data frames (FC-2 Header is processed) received after the point at which the error is detected and including the frame in which the error was detected. In all cases except the Stop Sequence condition, the Sequence Recipient shall discard the entire Sequence. The following rules apply:

a) the types of Sequence errors that shall be detected by an Nx_Port include:
   A) detection of a missing frame based on SEQ_CNT;
   B) detection of a missing frame based on a timeout (E_D_TOV);
   C) detection of an error within a frame (P_RJT);
   D) reception of a Reject frame (F_RJT or P_RJT); or
   E) detection of an internal malfunction;
b) if a Recipient receives a Data frame for a Sequence that the Recipient ULP wishes to stop receiving, the Recipient shall indicate the Stop Sequence condition to the Initiator by using the Abort Sequence Condition bits (10b) in F_CTL (see 22.5.5.3);
c) if a Recipient detects an error within a valid frame of a Sequence, it shall indicate that error to the Initiator by transmitting a P_RJT with a reason code;
d) if a Recipient receives a Data frame for an active Sequence that has previously had one or more Data frames rejected, the Recipient shall indicate that previous error to the Initiator on subsequent ACK frames using the Abort Sequence Condition bits (01b) in F_CTL in the same manner as it would if a missing frame were detected;
e) if the Recipient has transmitted an ACK with the Abort Sequence Condition bits set, or a P_RJT in response to a Data frame, it shall post that information in the Sequence Status;
f) if an Initiator receives an ACK with the Abort Sequence Condition bits in F_CTL requesting Stop Sequence (10b), it shall end the Sequence by transmitting the End_Sequence bit set to 1 in the next Data frame. If the last Data frame has already been transmitted, the Sequence Initiator shall not respond to the Stop Sequence request but shall notify the FC-4;
g) if an Initiator detects a missing frame, internal error, or receives an ACK with a detected rejectable condition, it shall abort the Sequence by transmitting an Abort Sequence (ABTS) Basic Link Service command (see 16.3.2);
h) if an Initiator receives an ACK with the Abort Sequence Condition bits (01b) in F_CTL requesting that the Sequence be aborted, it shall abort the Sequence by transmitting an Abort Sequence (ABTS) Basic Link Service command (see 16.3.2);

i) if an Initiator receives a Reject frame (F_RJT, or P_RJT), it shall abort the Sequence by transmitting an Abort Sequence (ABTS) Basic Link Service command (see 16.3.2) if the Sequence has not been terminated by the Sequence Recipient or Fabric using an EOF_t on the RJT; and

j) if the Sequence Initiator detects a Sequence timeout (see 22.5.3), it shall:

   A) abort the Sequence using ABTS; or

   B) transmit Link Credit Reset to the Recipient if no end-to-end Credit is available.

   End-to-end Credit is not required in order to exercise option A; however, if ABTS is sent in absence of end-to-end Credit, it is possible that the ABTS frame may be lost, forcing further error recovery process.

19.4.10.2 Discard multiple Sequences Error Policy

These rules apply to Discard multiple Sequences Error Policy:

a) if a Sequence Recipient detects a missing frame error, transmits a P_RJT, or detects an internal malfunction for a Sequence within an Exchange that requested Discard multiple Sequences Error Policy, it shall request that the Sequence be aborted by setting the Abort Sequence Condition bits to 01b in F_CTL on the ACK corresponding to the Data frame during which the missing frame error was detected. For detected errors other than missing frame, the Abort Sequence Condition bits shall be set to 01b in F_CTL for any subsequent ACKs transmitted. The Sequence Recipient may continue to transmit ACKs for subsequent frames of the Sequence and any subsequent streamed Sequences until the ABTS frame is received. Any ACKs transmitted for frames in this Sequence or any subsequent Sequences shall continue to set the Abort Sequence Condition bits to 01b (see 22.5.5.2). If an ACK is transmitted for the last Data frame of a Sequence, F_CTL bit 19 (End_Sequence), F_CTL bit 17 (Priority Enable), and F_CTL bit 16 (Sequence Initiative) settings on the Data frame shall be ignored, and in the ACK frame those bits shall be set to zero in addition to setting F_CTL bits 5-4 (Abort Sequence Condition) to 01b.

19.4.10.3 Discard a single Sequence Error Policy

If a Sequence Recipient detects a missing frame error, or detects an internal malfunction for a Sequence within an Exchange that requested Discard a single Sequence Error Policy, it shall request that the Sequence be aborted by setting the Abort Sequence Condition bits to 01b in F_CTL on the ACK corresponding to the Data frame during which the missing frame error was detected. For errors detected other than missing frame, the Abort Sequence Condition bits 01b in F_CTL shall be transmitted for any subsequent ACKs transmitted for this Sequence.

The Sequence Recipient may continue to transmit ACKs for subsequent frames of the Sequence until the ABTS frame is received. However, it shall not continue to set the Abort Sequence Condition bits in any subsequent streamed Sequences. If the final ACK (EOF_t) to the Sequence is transmitted, F_CTL bits 19, 17, 16, and 14 settings on the Data frame shall be ignored and shall be set to zero in the ACK frame, and bits 5-4 shall be set to 01b in the ACK frame (see 22.5.5.2).

19.4.10.4 Process with infinite buffers Error Policy

In process policy, the Recipient shall ignore errors detected on intermediate frames, or timeout errors such that ABTS is not requested. However, such errors shall be reported to an upper level.

If a Recipient detects an internal error related to a Sequence, or it detects that the first or last frame of a Sequence is missing, it shall request that the Sequence be aborted by setting the Abort Sequence Condition bits (01b) in F_CTL on subsequent ACK frames. The Recipient shall continue to respond in the same manner as defined under Discard a single Sequence Error Policy.

NOTE 44 - Missing last Data frame is detected by the Sequence timeout.

If a Sequence Recipient detects an error within a valid frame of a Sequence, it shall indicate that error to the Initiator by transmitting a P_RJT with a reason code.

19.4.11 Sequence errors - Class 3

19.4.11.1 Rules common to all discard policies

The Sequence Recipient may only detect errors within a Sequence.

In both discard policies, the Sequence Recipient shall discard Sequences in the same manner as in Class 2 with the exception that an ACK indication of Abort Sequence shall not be transmitted. In discard policy, the Recipient shall discard frames received after the point at which the error is detected. Individual FC-4s or upper levels may recover the entire Sequence or only that portion after which the error is detected.

a) the types of errors that shall be detected by an Nx_Port are:
   A) detection of a missing frame based on timeout; or
   B) detection of an internal malfunction;
b) if a Recipient detects an internal error, it shall abnormally terminate the Sequence, post the appropriate status, and notify the FC-4 or upper level. One or more Sequences shall not be delivered based on single or multiple Sequence discard Error Policy;
c) if a Recipient detects a missing frame, it shall abnormally terminate the Sequence, post the appropriate status, and notify the FC-4 or upper level. One or more Sequences shall not be delivered based on single or multiple Sequence discard Error Policy;
d) in the Discard multiple Sequences Error Policy in Class 3, the Sequence Recipient shall not be required to utilize a timeout value of R_A_TOV following detection of a missing frame. Therefore, frames may be discarded for an Exchange forever if the Sequence Initiator does not utilize other detection mechanisms; and
e) notification of the Sequence error condition to the Initiator is the responsibility of the FC-4 or upper level.

19.4.11.2 Process with infinite buffers Error Policy

In process Policy, the Recipient shall ignore errors detected on all frames, or timeout errors. However, such errors shall be reported to an upper level.

NOTE 45 - Ignoring an error on the first frame of a Sequence or an Exchange may cause the frame to be delivered to the wrong Recipient.

19.4.12 Sequence Status Rules

The following rules summarize Sequence Status Block processing:

a) the Sequence Initiator shall consider a Sequence open and active after transmission of the first frame of the Sequence. The Sequence shall remain active until the Sequence Initiator has transmitted the last frame of the Sequence. The Sequence Initiator shall consider the Sequence open until:
   A) it receives the ACK (EOF_t);
   B) BA_ACC is received to an ABTS frame; or
   C) a Logout Link Service request is completed;

b) a Sequence shall be considered open and active, and an Sequence Status Block opened, by the Sequence Recipient when any frame in a Sequence is received for the first Sequence of a new Exchange as indicated in F_CTL bit 21. An Exchange Status Block is opened at the same time and the Exchange is then considered open;

c) a Sequence shall be considered open and active, and a Sequence Status Block opened, by the Sequence Recipient when any frame in a Sequence is received for an open Exchange;

d) if the Sequence Recipient transmits an ACK frame with the Abort Sequence Condition bits other than 00b, it shall post that status in the Sequence Status Block status;

e) if a Sequence completes normally and is deliverable, its status shall be posted in the Sequence Status Block;

f) if a Sequence completes abnormally by the Abort Sequence Protocol, its status shall be posted in the Sequence Status Block; and

g) the Exchange Status Block shall be updated with Sequence Status information when the Sequence becomes abnormally complete, or normally complete.

19.4.13 Exchange termination

a) the last Sequence of the Exchange shall be indicated by setting the F_CTL Last_Sequence bit to one in the last Data frame of a Sequence. The Last_Sequence bit may be set to one prior to the last Data frame. Once it has been set to one, it shall remain set to one for the remainder of the Sequence;

b) the Exchange shall be terminated when the last Sequence is completed by normal Sequence completion rules;

c) an Exchange may be abnormally terminated using ABTS-LS. A Recovery_Qualifier timeout may be required; and

d) an Exchange shall be abnormally terminated following Logout with the other Nx_Port involved in the Exchange (either Originator or Responder). A Recovery_Qualifier timeout may be required.

19.4.14 Exchange Status Rules

The following rules summarize handling of Exchange Status Block processing:

a) an Exchange shall be considered open, and an Exchange Status Block opened, by the Originator after transmission of the first frame of the first Sequence;

b) an Exchange shall be considered open, and an Exchange Status Block opened, by the Sequence Recipient when any frame in the first Sequence is received;

c) an Exchange shall be remain open until:

   A) the last Sequence of the Exchange completes normally;

   B) a timeout period of E_D_TOV has elapsed since the last Sequence of the Exchange completed abnormally; or

   C) the Exchange is successfully aborted with ABTS-LS (that includes a Recovery_Qualifier timeout, if necessary);

   and

d) when an Exchange is no longer open, it shall be complete and the Exchange resources associated with the Exchange, including the Exchange Status Block, are available for reuse. An upper level may choose to complete an Exchange with an interlocked protocol in order to ensure that both the Originator and Responder agree that the Exchange is complete. Such a protocol is outside the scope of this standard.

19.5 Exchange management

An Exchange is managed as a series of Sequences of Data frames. The Originator of the Exchange shall transmit the initial Sequence. F_CTL bits within the Frame_Header identify and manage Sequences within an Exchange.

If Priority is in use in an Exchange (see 12.7.7), then all frames of all Sequences of the Exchange should have the same value of the Priority field (see 12.5.2).

Following the initial Sequence, subsequent Sequences may be transmitted by either the Originator or the Responder facilities based on which facility holds the Sequence Initiative.

19.6 Exchange origination

19.6.1 Introduction

The key facilities, functions, and events involved in the origination of an Exchange by both the Originator and Responder are diagrammed in figure 81. An Exchange for Data transfer may be originated with a destination Nx_Port following N_Port Login. Login provides information necessary for managing an Exchange and Sequences (e.g., class, the number of Concurrent Sequences, Credit, and Receive Data_Field Size). An Exchange is originated through the initiation of a Sequence. The rules in 19.4.2 specify the requirements for originating an Exchange.

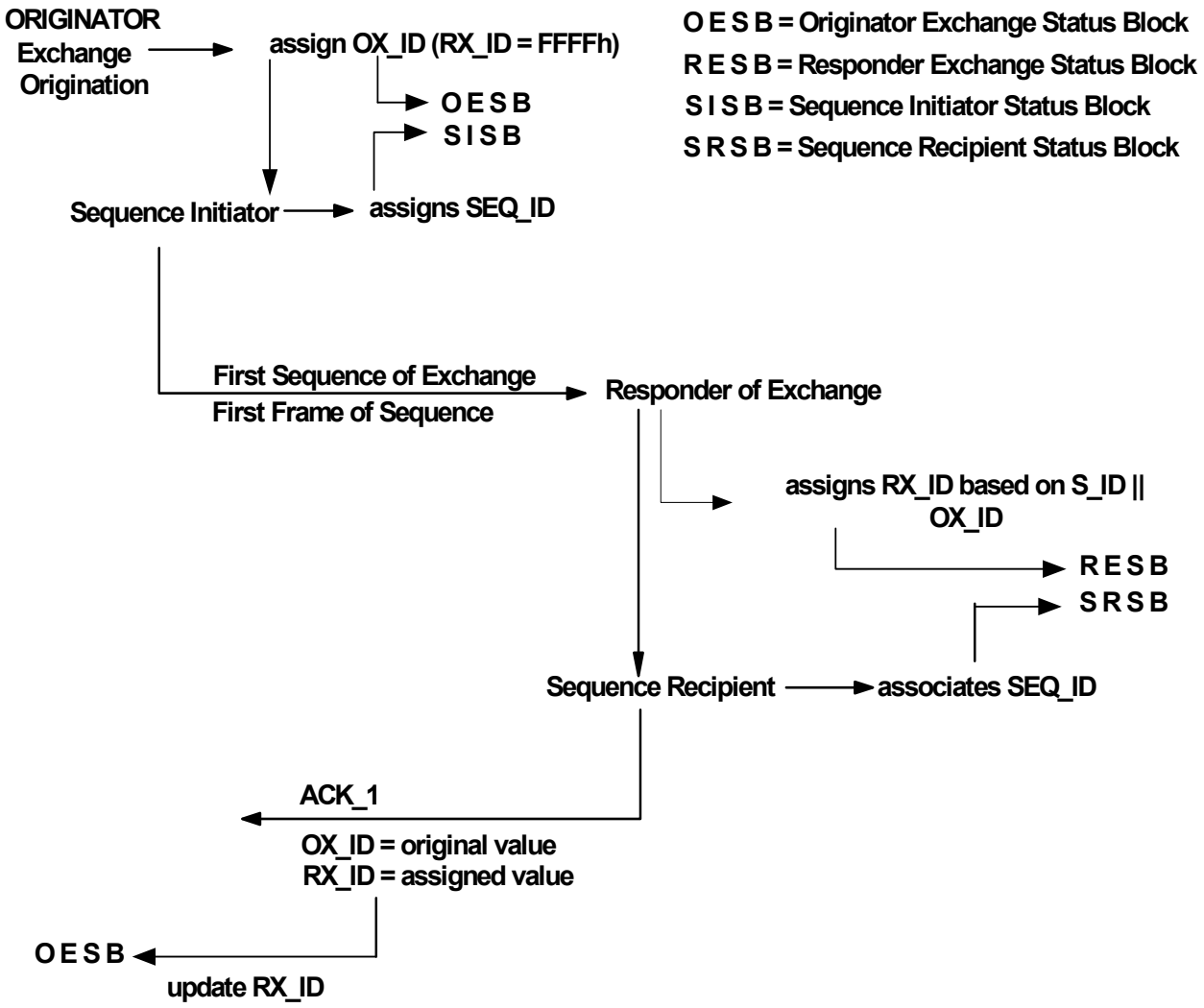

Figure 81 - Exchange origination

19.6.2 Exchange Originator

When an Exchange is originated by an Nx_Port, that Nx_Port shall assign an OX_ID unique to that Originator or Originator-Responder pair. An Originator Exchange Status Block is allocated and bound to the Exchange and other link facilities in that Nx_Port for the duration of the Exchange. All frames associated with that Exchange contain the assigned OX_ID. The Originator in the Originator Exchange Status Block shall track the status of the Exchange. See 19.7.3 for more information on unique Sequence_Qualifiers.

Each frame within the Exchange transmitted by the Originator shall be identified with an Exchange Context bit in the F_CTL field designating the frame as Originator generated (i.e., set to zero). The OX_ID, together with Originator-Responder pair information (if required) provides the mechanism for tracking Sequences for multiple concurrent Exchanges that may be active at the same time.

NOTE 46 - Since the Originator assigns the OX_ID, assignment may be organized to provide efficient processing within the Nx_Port. The Originator may choose to qualify the OX_ID using the Originator-Responder pair.

19.6.3 Exchange Responder

The destination Nx_Port shall be designated as the Responder for the duration of the Exchange. When the destination Nx_Port receives the first Sequence of the Exchange, that Nx_Port shall assign an RX_ID to the newly established Exchange. This RX_ID is associated with the OX_ID from a given S_ID to a Responder Exchange Status Block (S_ID||OX_ID). See 19.7.3 for more information on unique Sequence_Qualifiers.

In Class 2, the assigned RX_ID shall be transmitted to the Originator on the ACK frame responding to the last Data frame of the Sequence or earlier, if possible. In a Class 3 bi-directional Exchange, the assigned RX_ID shall be transmitted to the Originator in the first Data frame transmitted by the Responder. If the Sequence Recipient has specified X_ID interlock during Login, the RX_ID shall be assigned in the ACK to the first Data frame of the Sequence. The Originator shall withhold additional frame transmission for the Exchange until the ACK is received. The Responder Exchange_ID provides the mechanism for tracking Sequences for multiple concurrent Exchanges from multiple S_IDs or the same S_ID.

NOTE 47 - Since the Responder assigns the RX_ID, assignment may be organized to provide efficient processing within the Nx_Port.

Each frame within the Exchange transmitted by the Responder is identified with an Exchange Context bit in the F_CTL field designating the frame as Responder generated (i.e., set to one). Each frame within the Exchange transmitted by the Responder is identified with the assigned RX_ID. The Responder in the Responder Exchange Status Block shall track the status of the Exchange.

19.6.4 X_ID assignment

In the first frame of an Exchange, the Originator shall set the OX_ID to an assigned value and the RX_ID value to FF FFh (unassigned). When the Responder receives the first Sequence of an Exchange, it shall assign an RX_ID and in Class 2 shall return the RX_ID in the ACK frame sent in response to the last Data frame in the Sequence, or in an earlier ACK. In a Class 3 bi-directional Exchange, the Responder shall assign an RX_ID in the first Data frame transmitted.

For all remaining frames within the Exchange, the OX_ID and RX_ID fields retain these assigned values.

A given Exchange Originator may choose to provide frame tracking outside of the signaling protocol of this standard. Setting the OX_ID to FF FFh indicates this. This implies that the Exchange Originator shall only have one Exchange open with a given destination Nx_Port. If an Nx_Port chooses an alternative frame tracking mechanism outside the scope of this standard, it is still responsible for providing proper SEQ_ID and SEQ_CNT values. In addition, it shall return the RX_ID assigned by the Exchange Responder.

A given Exchange Responder may choose to provide frame tracking outside of the signaling protocol of this standard. Setting the RX_ID to FF FFh indicates this. If an Nx_Port chooses an alternative frame tracking mechanism outside the scope of this standard, it is still responsible for providing proper SEQ_ID and SEQ_CNT values. In addition, it shall return the OX_ID assigned by the Exchange Originator.

19.6.5 X_ID interlock

X_ID interlock is only applicable to Class 2. When an Nx_Port initiates a Sequence with an Nx_Port that has specified during Login that X_ID interlock is required and the Recipient's X_ID is invalid or unassigned, the initiating Nx_Port shall transmit the first frame of the Sequence with the Recipient's X_ID set to FF FFh and shall withhold transmission of additional frames until the corresponding ACK with an assigned X_ID has been received from the Recipient. The assigned X_ID is then used in all subsequent frames in the Sequence.

19.7 Sequence management

19.7.1 Sequence identification

The set of IDs S_ID, D_ID, OX_ID, RX_ID, and SEQ_ID is referred to as the Sequence_Qualifier. An Nx_Port implementation makes use of these IDs in a manner to uniquely identify open Sequences.

NOTE 48 - An Nx_Port's freedom to assign a SEQ_ID is based on Sequence context (Initiator or Recipient). This may affect how an Nx_Port implementation chooses to uniquely identify Sequences. See 19.4.4.

19.7.2 Open and active Sequences

From the standpoint of the Sequence Initiator, a Sequence is active for the period of time from the allocation of the SSB for the sequence until the end of the last Data frame of the Sequence is transmitted. In Class 2, the Sequence Initiator considers the Sequence open until the ACK with EOF_t is received, the Sequence is aborted by performing the ABTS Protocol, or the Sequence is abnormally terminated. In Class 3, the Sequence Initiator considers the Sequence open until the deliverability is confirmed, an FC-4 specific event occurs, a vendor specific event occurs, or an R_A_TOV timeout period has expired. The determination of deliverability of Class 3 Sequences is beyond the scope of this standard, which provides no deliverability guarantees for Class 3 Sequences.

In Class 2, from the standpoint of the Sequence Recipient, a Sequence is open and active from the time any Data frame is received until the EOFt is transmitted in the ACK to the last Data frame, or abnormal termination of the Sequence. In Class 3, from the standpoint of the Sequence Recipient, a Sequence is open and active from the time the initiating Data frame is received until all Data frames up to the frame containing EOF_t have been received.

19.7.3 Sequence_Qualifier management

The Sequence Initiator assigns a SEQ_ID (see clause 19.4.4). When the Sequence completes normally or abnormally, the SEQ_ID is reusable by the Sequence Initiator for any Sequence_Qualifier, including the same Recipient and Exchange providing that Sequence rules are followed (see 19.4.4). If a Sequence is aborted using the Abort Sequence Protocol, a Recovery_Qualifier may be specified by the Sequence Recipient (see 22.5.5.2), however, SEQ_ID shall not be included in the Recovery_Qualifier.

19.7.4 Sequence Initiative and termination

When a Sequence is terminated in a normal manner, the last Data frame transmitted by the Sequence Initiator is used to identify two conditions:

a) Sequence Initiative; and
b) Sequence termination.

19.7.5 Transfer of Sequence Initiative

The Sequence Initiator controls which Nx_Port shall be allowed to initiate the next Sequence for the Exchange. The Sequence Initiator may hold the initiative to transmit the next Sequence of the Exchange or the Sequence Initiator may transfer the initiative to transmit the next Sequence of the Exchange. The decision to hold or transfer initiative shall be indicated by Sequence Initiative bit in F_CTL.

In Class 2, the Sequence Recipient shall not consider Sequence Initiative to have been passed until the Sequence that passes the Sequence Initiative is completed successfully and the ACK (EOF_t) has been transmitted with the Sequence Initiative bit (F_CTL bit 16) = 1.

In Class 2, when a Sequence Initiator detects a Data frame (excluding the ABTS, FLUSH, FLUSH_RSP and RED frames) from the Recipient for an Exchange in which it holds the Sequence Initiative, it shall transmit a P_RJT with a reason code of “Exchange error”. In Class 3, when a Sequence Initiator detects a Data frame (excluding the ABTS, FLUSH, FLUSH_RSP and RED frames) from the Recipient for an Exchange in which it holds the Sequence Initiative, it shall abnormally terminate the Exchange and discard all frames for the Exchange.

When the Sequence Initiator is ending the current Sequence, it shall set the End_Sequence bit in F_CTL to one on the last Data frame of the Sequence.

19.7.6 Sequence Termination

19.7.6.1 Introduction

Setting the End_Sequence bit in F_CTL to one indicates the last Data frame transmitted by the Sequence Initiator. The Sequence is terminated by either the Initiator or the Recipient transmitting a frame terminated by EOF_t. The Sequence Initiator is in control of terminating the Sequence. Transmission of the EOF_t may occur in two ways:

a) in Class 2, the Sequence Recipient transmits an ACK frame of ACK_1 or ACK_0 with EOF_t in response to the last Data frame received for the Sequence; or
b) in Class 3, the Sequence Initiator transmits the last Data frame of the Sequence with EOF_t.

19.7.6.2 Class 2

Since Class 2 frames may be delivered out of order, Sequence processing is only completed after all frames (both Data and ACK) have been received, accounted for, and processed by the respective Nx_Ports.

When the Sequence is completed by each Nx_Port, the appropriate Exchange Status Block associated with the Sequence shall be updated in each Nx_Port to indicate that the Sequence was completed and whether the Originator or Responder facility holds the Sequence Initiative. Link facilities associated with the Sequence (including the Sequence Status Block) are released and available for other use.

NOTE 49 - Since ACKs may arrive out of order, the Sequence Initiator may receive the ACK that contains EOFt before ACKs for the same Sequence. The Sequence Initiator shall not consider the Sequence normally terminated until it has received the final ACK (see 22.5.5.4).

19.7.6.3 Class 3

The Sequence Initiator shall terminate the last Data frame of the Sequence with EOF_t. Acknowledgment of Sequence completion is the responsibility of the Upper Level Protocol.

When the Sequence is completed by each Nx_Port, the appropriate Exchange Status Block associated with the Sequence shall be updated in each Nx_Port to indicate that the Sequence was completed and whether the Originator or Responder facility holds the Sequence Initiative. Link facilities associated with the Sequence (including Sequence Status Block) are released and available for other use.

19.7.6.4 End_Sequence

When the Sequence Initiator is ending the current Sequence, it shall set the End_Sequence bit in F_CTL to one on the last Data frame of the Sequence.

19.8 Exchange termination

19.8.1 Normal termination

Either the Originator or the Responder may terminate an Exchange. The facility terminating the Exchange shall indicate Exchange termination on the last Sequence of the Exchange by setting the Last_Sequence bit in F_CTL on the last frame, or earlier, if possible, of the last Sequence of the Exchange.

The Sequence shall be terminated according to normal Sequence termination rules. When the last Sequence of the Exchange is terminated normally, the Exchange shall also be terminated. The OX_ID and RX_ID and associated Exchange Status Blocks are released and available for reuse.

19.8.2 Abnormal termination

Either the Originator or the Responder may abnormally terminate an Exchange by using the ABTS-LS Protocol (see 16.3.2.3) or Sequence timeout of the last Sequence of the Exchange. In general, reception of a reject frame with an action code of 2 as specified in 15.3.3 is not recoverable at the Sequence level and aborting of the Exchange is probable. Other reasons to abort an Exchange are FC-4 protocol dependent and not defined in this standard.

19.9 Status blocks

19.9.1 Exchange Status Block

The Exchange Status Block is a logical collection of information that is required internally for tracking of Exchanges, but it is not required to be supplied to any other Nx_Port or the FC-4 level. The Exchange Status Block (see table 99) associates the OX_ID, RX_ID, D_ID and S_ID of an Exchange. The Exchange Status Block is used throughout the Exchange to track the progress of the Exchange and to identify which Nx_Port holds the Sequence Initiative. Information equivalent to the Exchange Status Block records Exchange status information To support error recovery, the Exchange Status Block shall include status for up to X+2 completed Sequences, where X is the value of the Open Sequences per Exchange Class Service Parameter negotiated at N_Port Login. When status has been retained for X+2 Sequences, status for the next completed Sequence shall replace the oldest saved status.

Retained status for completed Sequences shall be equivalent to the following information from the Sequence Status Block:

a) SEQ_ID;
b) Lowest SEQ_CNT;
c) Highest SEQ_CNT; and
d) S_STAT.

Table 99 - Exchange Status Block

Item	Reference
CS_CTL/Priority	12.5
OX_ID	12.11
RX_ID	12.12
Originator Address Identifier (High order byte - reserved)	12.4
Responder Address Identifier (High order byte - reserved)	12.4
E_STAT	table 100
Service Parameters (i.e., PLOGI payload words 1-28)	FC-LS-4
Retained Sequence Status for completed Sequences	table 101

E_STAT: The E_STAT item shall be a set of values as specified in table 100.

Table 100 - E_STAT item in the Exchange Status Block (part 1 of 2)

Item	Values
ESB owner (see 19.6.2 and 19.6.3)	0 = Originator 1 = Responder
Sequence Initiative (see 19.2.7)	0 = Other port holds initiative 1 = This port holds initiative
Completion (see 19.4.14)	0 = open 1 = complete
Ending Condition (see 19.4.13)	0 = normal 1 = abnormal
Recovery Qualifier (see 16.3.2.2.4)	0 = none 1 = Active
Exchange Error Policy (see 12.7.10)	00b = Abort, Discard multiple Sequences 01b = Abort, Discard a single Sequence 10b = Process with infinite buffers 11b = Obsolete
Originator X_ID invalid (see 15.3.3.4.2.12)	0 = Originator X_ID valid 1 = Originator X_ID invalid X_ID validity status reflects the completion condition of the newest Sequence Status Block contained in the ESB.
Responder X_ID invalid (see 15.3.3.4.2.13)	0 = Responder X_ID valid 1 = Responder X_ID invalid X_ID validity status reflects the completion condition of the newest Sequence Status Block contained in the ESB.

Table 100 - E_STAT item in the Exchange Status Block (part 2 of 2)

Item	Values
Priority in Use (see 12.7.7)	0 = Priority not used for this Exchange 1 = Priority in use for this Exchange Priority not enabled reflects the condition set in F_CTL for SOFix frames.

19.9.2 Sequence Status Block

A Sequence Status Block (see table 101) is a logical collection of information that is required internally for tracking of Sequences, but it is not required to be supplied to any other Nx_Port or the FC-4 level. The Sequence Status Block is used to track the progress of a single Sequence by an Nx_Port on a frame by frame basis. A Sequence Status Block shall be opened and maintained by the Sequence Initiator for each Sequence transmitted and by the Sequence Recipient for each Sequence received in order to track Sequence progress internally.

Table 101 - Sequence Status Block

Item	Reference
SEQ_ID	12.8
Lowest SEQ_CNT	this subclause
Highest SEQ_CNT	this subclause
S_STAT	table 102
Error SEQ_CNT	this subclause
CS_CTL/Priority	12.5
OX_ID	12.11
RX_ID	12.12

Lowest SEQ_CNT: For a Sequence Initiator, the SEQ_CNT assigned to the first frame transmitted on the Sequence. For a Sequence Recipient, the SEQ_CNT assigned to the first frame received on the Sequence.

Highest SEQ_CNT: For a Sequence Initiator, one greater than the SEQ_CNT assigned to the last frame transmitted on the Sequence. For a Sequence Recipient, one greater than the SEQ_CNT assigned to the last frame received on the Sequence.

Error SEQ_CNT: For a Sequence Recipient that has detected one or more missing frames, the SEQ_CNT of the first missing frame, or zero if no missing frames have been detected. For a Sequence Initiator, this value is unused.

S_STAT: The S_STAT item shall be a set of values as specified in table 102.

Table 102 - S_STAT item of the Sequence Status Block

Item	Values
Sequence context (see 19.2.7)	0 = Initiator 1 = Recipient
Active (see 19.7.2)	0 = not active 1 = active
Ending Condition (see 19.4.12)	0 = normal 1 = abnormal
ACK, Abort Sequence condition (see 12.7.10)	00b = continue 01b = Abort Sequence requested 10b = Stop Sequence requested 11b = Obsolete
ABTS protocol performed (see 22.5.5.2.2)	0 = ABTS not completed 1 = ABTS completed by Recipient
Sequence time-out (see 22.5.3)	0 = Sequence not timed-out 1 = Sequence timed-out by Recipient (E_D_TOV)
P_RJT transmitted (see 15.3.3.4)	0 = P_RJT not transmitted 1 = P_RJT transmitted
Class (see clause 17)	00b = reserved 01b = Obsolete 10b = Class 2 11b = Class 3
ACK (EOFt) transmitted (see 19.7.6.1)	0 = ACK (EOFt) not transmitted 1 = ACK (EOFt) transmitted

20 Flow control management

20.1 Scope

End-to-end flow control is a function of the FC-2V sublevel. Buffer-to-buffer flow control is a function of the FC-2P sublevel.

20.2 Introduction

20.2.1 Point-to-point topology

All the flow control models specified in this clause apply to Fabric topology. The flow control model for Point-to-point topology is represented by the corresponding model for the Fabric topology, without the flow of F_BSY(DF), F_BSY(LC), and F_RJT.

20.2.2 End-to-end and Buffer-to-buffer flow control

Flow control is the FC-2 control process to pace the flow of frames to prevent overrun at the receiver. Flow control is managed using end-to-end Credit, end-to-end Credit_CNT, ACK_0, ACK_1, buffer-to-buffer Credit, buffer-to-buffer Credit_CNT, and R_RDY along with other frames.

End-to-end flow control is managed between Nx_Ports (see 20.3) and buffer-to-buffer flow control is managed between FC_Ports (see 20.4).

20.2.3 Flow control dependencies on class of service

Flow control management has variations dependent upon the class. Class 2 frames use both end-to-end and buffer-to-buffer flow controls. Class 3 uses only buffer-to-buffer flow control. Table 103 shows the applicability of the flow control mechanisms to each class.

Table 103 - Flow control applicability

Flow Control methodology and mechanism	Class 2	Class 3
end-to-end	Yes	No
buffer-to-buffer	Yes	Yes
ACK_1	Yes	No
ACK_0	One per Sequence	No
R_RDY	Yes	Yes
F_BSY	Yes	No
F_RJT	Yes	No
P_BSY	Yes	No
P_RJT	Yes	No

The physical flow control model is illustrated in figure 82. The model consists of following physical components:

a) each PN_Port, with its receive buffers; and
b) each PF_Port to which a PN_Port is attached, with its receive buffers.

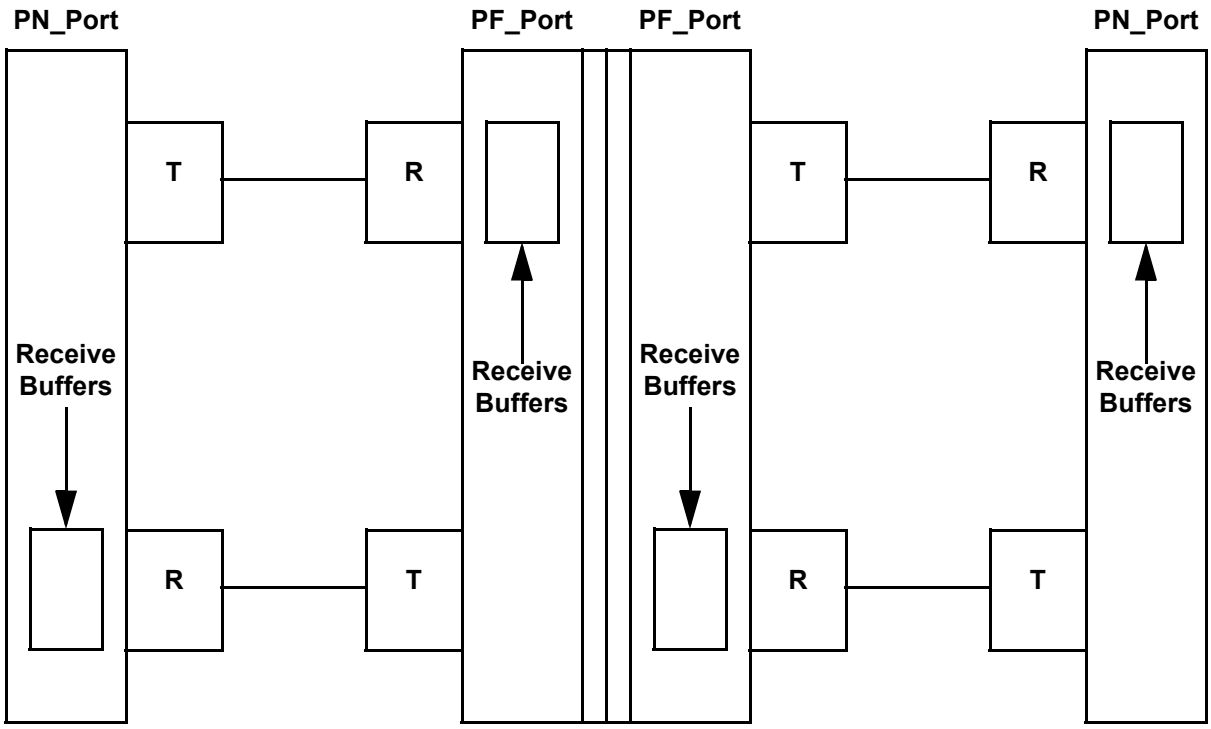

Figure 82 - Physical flow control model for Class 2 and Class 3

Class 2 frames and Class 3 frames shall share receive buffers. End-to-end flow control buffers are used only for Class 2.

20.2.4 Credit and Credit_Count

The method of credit accounting specified in this standard is a model, not an implementation. Any implementation with the same observable behavior is consistent with this standard.

Credit is the number of buffers allocated by a receiving FC_Port to a transmitting FC_Port. Two types of Credits used in flow control are:

a) End-to-end Credit (EE_Credit) - between communicating Nx_Ports; and
b) buffer-to-buffer Credit (BB_Credit) - between adjacent FC_Ports.

Corresponding to the two types of Credits are two types of Credit_Counts:

a) End-to-end Credit_Count (EE_Credit_CNT); and
b) buffer-to-buffer Credit_Count (BB_Credit_CNT).

Credit_Counts represent the amount of a Credit that is in use. A transmitting FC_Port has no Credit available with a receiving FC_Port if its Credit_Count equals its Credit. The transmitting FC_Port manages the Credit_Count (see table 104, table 105, and table 106). The Credit_Count management is internal to the transmitting FC_Port and is transparent to the receiving FC_Port.

The Nx_Port transmitting Class 2 Data frames shall use the EE_Credit allocated by the receiving Nx_Port for end-to-end flow control and manage the corresponding EE_Credit_Count (see 20.3). Class 3 Data frames do not participate in end-to-end flow control. When an FC_Port is transmitting Data frames or Link_Control frames, it shall use BB_Credit allocated by the receiving FC_Port for buffer-to-buffer flow control and manage the corresponding BB_Credit_Count (see 20.4).

20.3 End-to-end flow control

20.3.1 End-to-end management rules

End-to-end flow control is an FC-2V control process to pace the flow of frames between Nx_Ports. An Nx_Port pair in Class 2 uses end-to-end flow control.

End-to-end flow control is performed with EE_Credit_CNT and EE_Credit as the controlling parameter.

End-to-end management rules are given in following subclauses for those cases where no error occurs. Management of EE_Credit_CNT is summarized in table 104. The EE_Credit recovery is specified in 20.3.8.

Table 104 - End-to-end flow control management

Activity	EE_Credit_CNT (Nx_Port only)
Nx_Port transmits a Class 2 Data frame	Increment EE_Credit_CNT by one
Nx_Port transmits an LCR	Set EE_Credit_CNT for the destination Nx_Port to zero.
Nx_Port receives F_BSY (DF), F_RJT, P_BSY, or P_RJT	Decrement EE_Credit_CNT by one
Nx_Port receives F_BSY (LC)	N/A
Nx_Port receives ACK_1 (Parameter field: History bit = 1, ACK_CNT = 1	Decrement EE_Credit_CNT by one
Nx_Port receives ACK_1 (Parameter field: History bit =0, ACK_CNT =1)	subtract 1 for current SEQ_CNT of the ACK_1 and also subtract all unacknowledged lower SEQ_CNTs (see 15.3.2.2)
Nx_Port receives ACK_0 (Parameter field: History bit = 0, ACK_CNT = 0)	N/A (see 15.3.2.2)
Nx_Port receives Data frame	N/A
Nx_Port receives an LCR	N/A [a]
Nx_Port transmits a Class 3 Data frame	N/A
Nx_Port transmits P_BSY or P_RJT	N/A
Nx_Port transmits ACK	N/A

Notes:
N/A = Not applicable

[a] On receipt of LCR, the Sequence Recipient frees all end-to-end flow control buffers in use by the Sequence Initiator for reuse by the Sequence Initiator (see 15.3.4)

20.3.2 Sequence Initiator

The following rules apply to the Sequence initiator:

a) the Sequence Initiator is responsible for managing EE_Credit_CNT across all active Sequences;
b) the Sequence Initiator shall not transmit a Data frame other than the ABTS Basic Link Service unless the allocated EE_Credit is greater than zero and the EE_Credit_CNT is less than this EE_Credit;
c) in Class 2, the value of the EE_Credit_CNT = 0 at the end of N_Port Login, N_Port Relogin, or Link Credit Reset (see 15.3.4);
d) the EE_Credit_CNT is incremented by one for each Class 2 Data frame transmitted. In the case of ACK_0 usage, EE_Credit_CNT management is not applicable;

e) the Sequence Initiator decrements the EE_Credit_CNT by a value of one for each ACK_1 (parameter field: History bit = 1, ACK_CNT = 1), F_BSY(DF), F_RJT, P_BSY, or P_RJT received;

f) for an ACK_1 (parameter field: History bit = 0, ACK_CNT = 1) received, the Sequence Initiator shall decrement the EE_Credit_CNT by one for the current SEQ_CNT in the ACK_1 and by one for each unacknowledged Data frame with lower SEQ_CNT. If any of these ACKs with lower SEQ_CNT is received later, it is ignored and Credit_Count is not decremented;

g) for an ACK_0 (parameter field: History bit = 0, ACK_CNT = 0) received, the Sequence Initiator recognizes that the Sequence has been received successfully or unsuccessfully, or that the interlock is being completed (see 15.3.2), but does not perform any EE_Credit_CNT management; and

h) for an ACK_1 received with EOF_t and either value of the History bit, the Sequence Initiator shall recover the Credit for the Sequence by decrementing the EE_Credit_CNT by one for each unacknowledged Data frame with lower SEQ_CNT of the Sequence. If any of these ACKs with lower SEQ_CNT is received later, it is ignored and Credit_Count is not decremented.

20.3.3 Sequence Recipient

20.3.3.1 General

The Sequence Recipient is responsible for acknowledging valid Data frames received (see 15.3.2.2).

The Sequence Recipient may use ACK_0 and ACK_1 as determined during N_Port Login (see FC-LS-4). The Sequence Recipient rules for using ACK_0 and ACK_1 are different and are listed for a non-streamed Sequence first, followed by additional rules for streamed Sequences.

20.3.3.2 ACK_0

If ACK_0 is used (see 15.3.2), the following rules apply to the Sequence Recipient:

a) ACK_0 shall not participate in end-to-end flow control;

b) a single ACK_0 per Sequence shall be used to indicate successful or unsuccessful Sequence delivery at the end of the Sequence except under specified conditions;

c) both the History bit and the ACK_CNT of the Parameter field shall be set to zero; and

d) the ACK_0 used at the end of a Sequence shall have the End_Sequence bit set to 1. The ACK_0 used at the end of a Sequence shall be ended with EOF_t in Class 2.

20.3.3.3 ACK_1

If ACK_1 is used, the following rules apply to the Sequence Recipient:

a) for each valid Data frame acknowledged an ACK_1 shall be sent with ACK_CNT set to 1;

b) the History bit of the Parameter field shall be set to 1 if at least one ACK is pending for a previous SEQ_CNT for the Sequence, or shall be set to zero if no ACK is pending for any previous SEQ_CNT for the Sequence (see 15.3.2.2); and

c) in Class 2, the last ACK_1 shall be issued by the Sequence Recipient in one of the two ways specified:

   A) in Class 2 the Sequence Recipient shall withhold transmission of the last ACK_1 until all preceding Data frames with lower SEQ_CNTs have been received, processed, and corresponding ACK_1s transmitted (see 19.4.7). In this case, the last ACK_1 transmitted by the Sequence Recipient shall have the End_Sequence bit set to 1, History bit set to zero and shall contain EOF_t; or

B) in Class 2, in response to the last Data frame (End_Sequence bit = 1) transmitted by the Sequence Initiator, if any of the Data frame is pending for the Sequence, the Sequence Recipient may transmit ACK_1 (with End_Sequence bit set to zero) but with EOF_n in lieu of EOF_t. In this case, the last ACK_1 transmitted by the Sequence Recipient shall have the End_Sequence bit set to 1, History bit set to 1 and shall contain EOF_t.

20.3.3.4 Last ACK timeout

If a Sequence error is detected or the E_D_TOV expires when the Sequence Recipient is withholding the last ACK for a Sequence and waiting to send other ACKs for that Sequence, the Sequence Recipient supporting discard policy shall set Abort Sequence bits and transmit the last ACK. The Sequence Recipient supporting the Process Policy shall transmit the last ACK without setting the Abort Sequence bits (see 19.4.10.4).

20.3.3.5 Streamed Sequences

Each of the streamed Sequences shall follow all the rules for a non-streamed Sequence as defined in 20.3.3.1 and 20.3.3.3 above. In addition, in the case of multiple Sequence discard policy, the last ACK for the succeeding Sequence shall be withheld until all the previous Sequences are complete and deliverable. This additional withholding, for previous Sequences to complete and be deliverable, is not applicable to the case of Single Sequence discard policy.

20.3.4 EE_Credit

EE_Credit is the number of end-to-end flow control buffers in the Sequence Recipient that have been allocated to a given Sequence Initiator. EE_Credit represents the maximum number of unacknowledged or outstanding frames that may be transmitted without the possibility of overrunning the receiver at the Sequence Recipient. EE_Credit is defined for Class 2 per Sequence Recipient and managed by the Sequence Initiator. EE_Credit represents the number of end-to-end flow control buffers allocated to the Sequence Initiator. The value of EE_Credit allocated to the Sequence Initiator is conveyed to this Nx_Port through the Nx_Port End-to-end Credit field of the PLOGI Class Service Parameters (see FC-LS-4). The minimum or default value of EE_Credit is one.

The sum of allocated Class 2 EE_Credit may exceed the total number of Class 2 end-to-end flow control buffers supported at the Sequence Recipient. This excess buffer allocation shall not result in overrun. Class 2 EE_Credit allocation depends upon system requirements, which are outside the scope of this standard.

EE_Credit is used as a controlling parameter in end-to-end flow control.

EE_Credit is not applicable to Class 3.

20.3.5 EE_Credit_CNT

EE_Credit_CNT is defined as the number of unacknowledged or outstanding frames awaiting a response and represents the number of end-to-end flow control buffers that are occupied at the Sequence Recipient. To track the number of frames transmitted and outstanding, the Sequence Initiator uses the EE_Credit_CNT variable.

20.3.6 EE_Credit management

EE_Credit management involves an Nx_Port establishing and revising EE_Credit with the other Nx_Port it intends to communicate with using Class 2.

Since Class 2 supports demultiplexing to multiple Sequence Recipients, the Sequence Initiator manages an EE_Credit_CNT for each Sequence Recipient currently active, with the EE_Credit for that Sequence Recipient as the upper bound.

N_Port Login is used to establish and optionally revise these EE_Credit values. The Estimate Credit procedure may be used to estimate and revise end-to-end Credit for streaming. The Advise Credit Sequence and associated LS_ACC Sequence may also be used as a stand-alone procedure to revise the EE_Credit. The Service Parameters interchanged during N_Port Login provide the Class 2 EE_Credit.

A Sequence Initiator, during N_Port Login obtains EE_Credit from the Nx_Port to which it is logging in. EE_Credit allocated by the Sequence Recipient forms the maximum limit for the EE_Credit_CNT value. The EE_Credit_CNT value shall be set to zero upon leaving the Active link state, Login, or Relogin. The EE_Credit_CNT is incremented, decremented or left unaltered as specified by the flow control management rules (see 20.3.1). The EE_Credit_CNT shall not exceed the EE_Credit value to avoid possible overflow at the receiver except that the EE_Credit_CNT may exceed the EE_Credit value as a result of transmitting an ABTS Basic Link Service.

The Sequence Initiator shall allocate the total EE_Credit associated with a Sequence Recipient among all active Sequences associated with that Sequence Recipient. The Sequence Initiator function may dynamically alter the EE_Credit associated with each active Sequence as long as the total EE_Credit specified for the Sequence Recipient is not exceeded. In the event of an abnormal termination of a Sequence using the Abort Sequence Protocol, the Sequence Initiator may reclaim the Sequence EE_Credit allocation when the BA_ACC response has been received to the Abort Sequence frame.

The Nx_Port is responsible for managing EE_Credit_CNT using EE_Credit as the upper bound on a per Nx_Port basis except that the EE_Credit_CNT may exceed the EE_Credit value as a result of transmitting an ABTS Basic Link Service.

20.3.7 End-to-end flow control model

The end-to-end flow control model is illustrated in figure 83. The model includes flow control parameters, control variables and resources for a Data frame from a Sequence Initiator and ACK_1 or BSY/RJT in response from the Sequence Recipient.

a) the Sequence Recipient provides a number of end-to-end flow control receive buffers;
b) the Sequence Initiator obtains the allocation of Class 2 end-to-end flow control buffers, as Class 2 EE_Credits. That allocation is distributed among all the open Sequences for a specific Sequence Recipient; and
c) the Sequence Initiator manages the end-to-end flow by managing Class 2 EE_Credit_CNT(s). That management is distributed among all the active Sequences for a specific Sequence Recipient.

The model illustrates all possible replies to the Data frame. The EE_Credit_CNT is decremented by one when the ACK_1 frame is received.

For more details on incrementing and decrement EE_Credit_CNT see table 104.

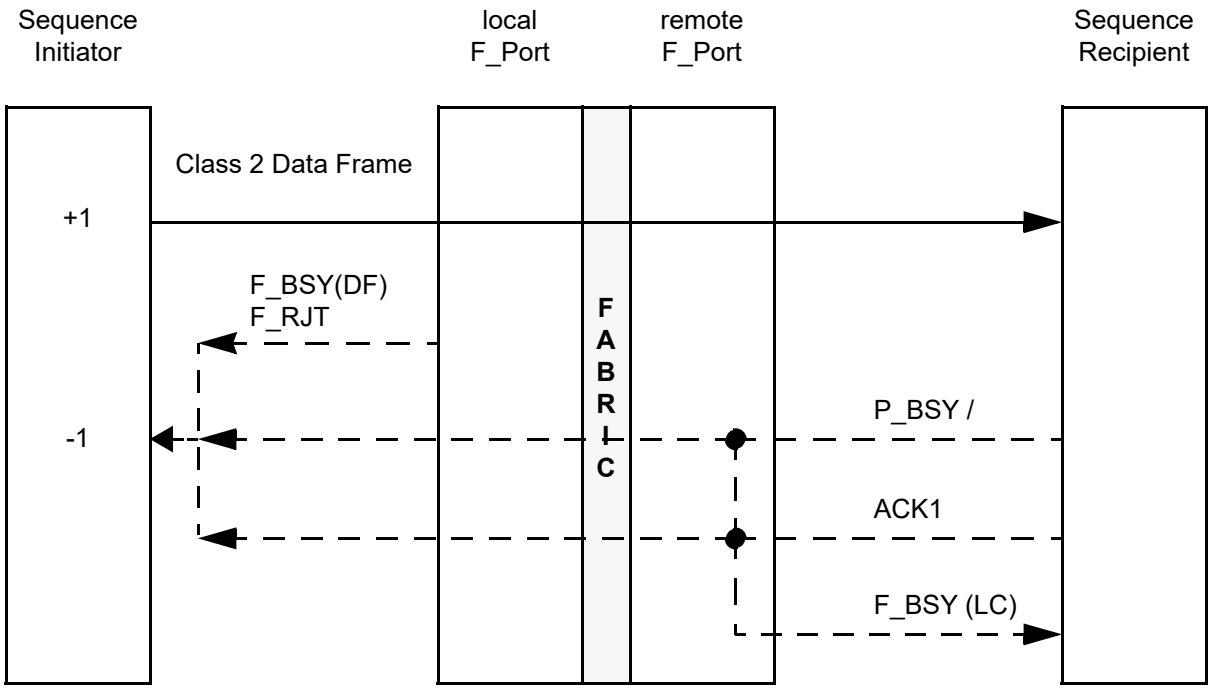

Key:
+1 / -1 indicates action on end-to-end Credit_CNT (i.e., for Class 2)

Figure 83 - End-to-end flow control model

20.3.8 EE_Credit recovery

See 20.3.2 and 20.3.3 for EE_Credit management rules. The rules provide for EE_Credit recovery in the following circumstances:

a) the Sequence Initiator recovers EE_Credit within the Sequence by detection of SEQ_CNT discontinuity in ACK, if the ACK received contains zero in the History bit of the Parameter field;
b) the Sequence Initiator recovers EE_Credit for any unacknowledged Data frames associated with a Sequence when the Sequence is terminated. Termination may be normal or abnormal;
c) EE_Credit is recovered by Link Credit Reset (see 15.3.4.2); and
d) All EE_Credit is recovered by N_Port Login (see FC-LS-4).

20.3.9 Procedure to estimate end-to-end Credit

20.3.9.1 Introduction

An estimate of the minimum end-to-end Credit between an Nx_Port pair for a given distance helps achieve the maximum bandwidth utilization of the channel, by continuously streaming data. The procedure to estimate end-to-end Credit is defined to accomplish this purpose.

Link Service Sequences that support this procedure are optional. This procedure shall be performed after Login between this Nx_Port pair. Login determines a number of Service Parameters (e.g., the maximum Data_Field size that each Nx_Port is capable of receiving).

The procedure and the continuous streaming function may also be limited by the buffer-to-buffer Credit.

The procedure shall be invoked by the Link Service support of the source Nx_Port and responded to by the Link Service support of the destination Nx_Port. Since the ELS requests used to perform this procedure are optional, LS_RJT (see FC-LS-4) may be received to any request (except ESTC which has no reply) with a reason code of “Command not supported”.

20.3.9.2 Procedure steps

20.3.9.2.1 General

This procedure is optional and consists of following three request Sequences:

a) Establish Streaming Sequence;
b) Estimate Credit Sequence; and
c) Advise Credit Sequence.

The procedure is illustrated with these request Sequences and their respective reply Sequences in figure 84.

The procedure shall be performed in Class 2 with respective delimiters, as specified in 17.3.

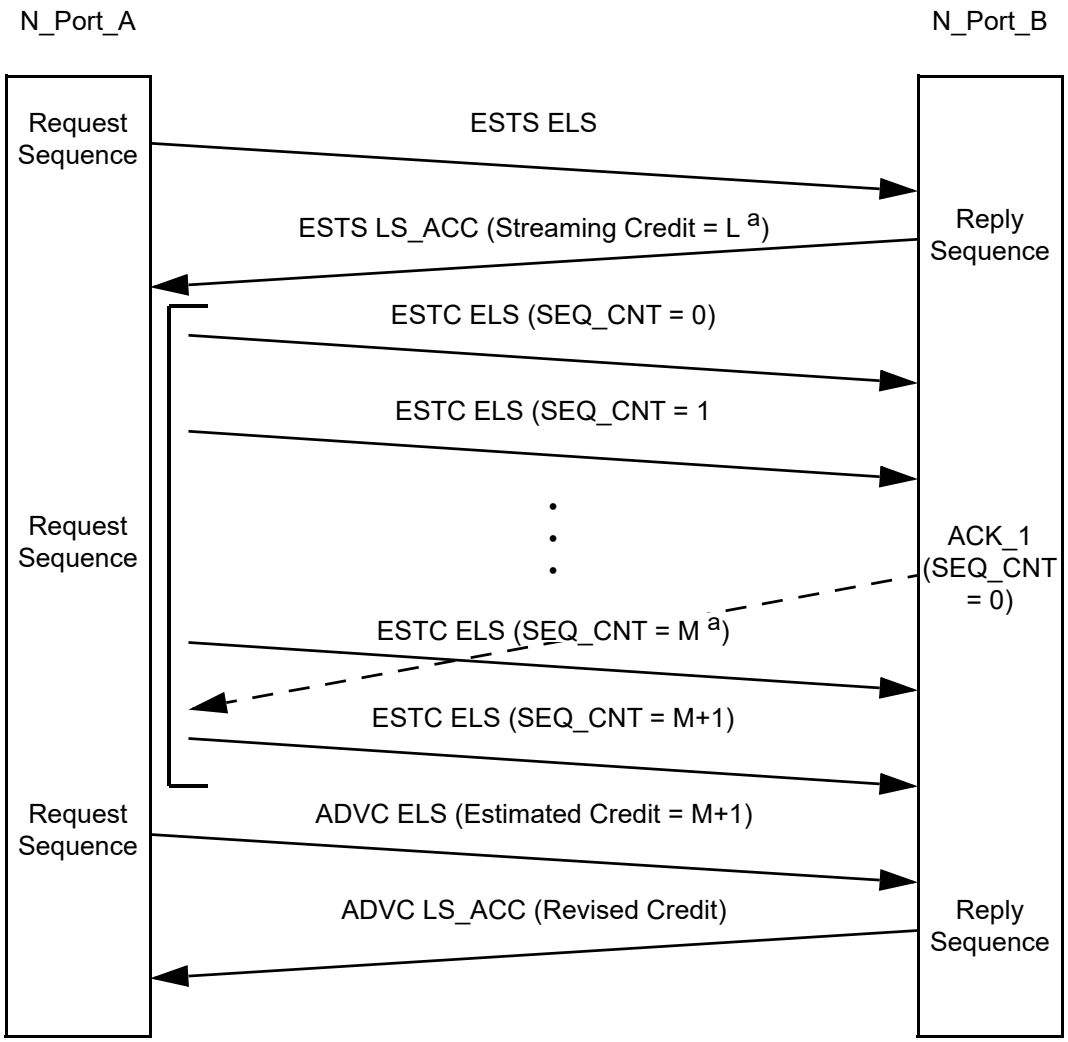

[a] If M reaches L, N_Port_A stops streaming and completes the ESTC ELS Sequence after receiving the ACK_1

Figure 84 - Procedure to estimate end-to-end Credit

20.3.9.2.2 Establish Streaming Sequence

The ESTS ELS (see FC-LS-4) shall be used to obtain an end-to-end Credit large enough to perform continuous streaming from a source Nx_Port to a destination Nx_Port. This Sequence provides an opportunity for the destination Nx_Port to communicate the maximum end-to-end Credit it shall provide for the purposes of streaming. This temporary allocation is termed Streaming Credit (L).

This Sequence shall be used between an Nx_Port pair after the Nx_Port pair have logged in with each other. This Sequence shall be initiated as a new Exchange. The Originator of the Exchange shall initiate the Sequence.

1) the source shall transmit the ESTS ELS;
2) the destination shall reply with a LS_ACC frame;
3) the Class Validity bit for Class 2 service shall be set to one (see FC-LS-4); and
4) the Payload of LS_ACC shall have the same format as the Service Parameters for N_Port Login. The Payload shall contain Streaming Credit (L) allocated in the end-to-end Credit field of the Class 2 Service Parameters (word 2, bits 14-0 of the class group). The receiver shall ignore the other fields.

20.3.9.2.3 Estimate Credit Sequence

The Estimate Credit (see FC-LS-4) ELS shall be performed immediately following the completion of the Establish Streaming Sequence. This Sequence requires the use of ACK_1 and may not be executed by all Nx_Ports.

a) the source Nx_Port shall stream ESTC (see FC-LS-4) frames consecutively until it receives the first ACK (ACK_1) from the destination Nx_Port with the Abort Sequence bits (F_CTL bits 5-4) set to 10b. The source shall not exceed the Streaming Credit obtained during the Establish Streaming Sequence;
b) if the source does not receive ACK_1 after it has reached the limit imposed by the Streaming Credit value, it shall stop streaming and wait for the first ACK to be received with the Abort Sequence bits (F_CTL bits 5-4) set to 10b;
c) the size of the Data_Field of the ESTC frame shall be the normal size frames transmitted by a FC-4 based on the Service Parameters from N_Port Login;
d) the Payload shall contain data bytes;
e) the SEQ_CNT shall follow the normal rules for Sequence transmission;
f) the destination Nx_Port shall respond with ACK for Data frames received;
g) if the highest SEQ_CNT transmitted by the source Nx_Port at the time it receives the first ACK is M, the number of outstanding frames (i.e., Credit estimated for continuous streaming) shall equal M+1. If ACK is received within the Streaming Credit limit (L > M), this value of M+1 represents the minimum Credit required to utilize the maximum bandwidth of the fibre. If the ACK is received after reaching the Streaming Credit limit, this value is less than the optimal Credit required to utilize the maximum bandwidth of the fibre; and
h) the source Nx_Port shall follow all the rules in closing the Sequence, by sending the last Data frame of the Sequence and waiting for corresponding ACK to be received.

20.3.9.2.4 Advise Credit Sequence

The Advise Credit (see FC-LS-4) shall be performed immediately following completion of the Estimate Credit Sequence. The source Nx_Port that performed the Estimate Credit Sequence shall advise the destination Nx_Port of the Estimated Credit in ADVC Data_Field. The destination Nx_Port shall reply using a LS_ACC frame, with a revised end-to-end Credit value in its Payload. This value is determined by the destination Nx_Port based on its buffering scheme, buffer management, buffer availability and Nx_Port processing time. This is the final value to be used by the source Nx_Port for revised end-to-end Credit.

This Sequence provides a complementary function to Login. In contrast to the Login frame, the ADVC frame contains the end-to-end Credit it would like to be allocated for continuous streaming.

If the Estimated Credit (M+1) is less than or equal to the Streaming Credit, the destination may choose to reallocate the estimated end-to-end Credit. If the Streaming Credit is smaller than needed for continuous streaming, the source Nx_Port is bound to run short of end-to-end Credit and the source Nx_Port may advise the reallocated estimated end-to-end Credit value as the Estimated Credit.

a) the source Nx_Port shall transmit Advise Credit frame with the Estimated Credit (M+1);
b) the Payload of the ADVC shall have the same format as the Service Parameters for Login. The Payload shall contain the Estimated Credit (M+1) in end-to-end Credit field of the Class 2 Service Parameters. The Class Validity bit for Class 2 service shall be set to one (see FC-LS-2). The receiver shall ignore the other fields. The destination Nx_Port shall determine the revised end-to-end Credit value. The destination shall determine the value based on its buffer management, buffer availability and port processing time and may add a factor to the Estimated Credit value. This is the final value to be used by the source Nx_Port for end-to-end Credit; and
c) the destination Nx_Port replies with a LS_ACC frame that successfully completes the Protocol. The LS_ACC Sequence shall contain the end-to-end Credit allocated to the source Nx_Port. The Payload of LS_ACC shall have the same format as the Service Parameters for Login. The Payload shall contain the final end-to-end Credit in end-to-end Credit field of the Class 2 Service Parameters. The receiver shall ignore the other fields.

Since the maximum Data_Field size, and thus the maximum frame size, is permitted to be unequal in forward and reverse directions, the Estimate Credit procedure may be performed separately for each direction of transfer. Credit modification applies only to the direction of the transfer of Estimate Credit frames.

The Estimate Credit procedure provides an approximation of the distance involved on a single path. If there are concerns that in a Fabric in which the length (and time) of the paths assigned may vary, the procedure may be repeated several times to improve the likelihood that the Estimated end-to-end Credit value is valid.

Alternatively, a source may accept the Estimated end-to-end Credit value. If, at a later time, data transfers are unable to stream continuously, the source may re-initiate the Estimate Credit Procedure, or arbitrarily request an increase in Estimated end-to-end Credit by using an ADVC Link request Sequence.

20.4 Buffer-to-buffer flow control

20.4.1 Introduction

Buffer-to-buffer flow control is an FC-2P staged control process to pace the flow of frames. The buffer-to-buffer control occurs in both directions between:

a) Sequence Initiator and the local Fx_Port;
b) remote Fx_Port and the PN_Port of the Sequence Recipient Nx_Port;
c) E_Ports within the Fabric; and
d) the PN_Ports of the Sequence Initiator and Sequence Recipient Nx_Ports in point to-point topology.

20.4.2 Buffer-to-buffer management rules

Buffer-to-buffer flow control rules are as follows:

a) each FC_Port is responsible for managing its own BB_Credit_CNT;
b) the sending FC_Port shall not transmit a frame unless the allocated BB_Credit is greater than zero and the BB_Credit_CNT is less than this BB_Credit. To avoid possible overrun at the receiver, each FC_Port is responsible for maintaining BB_Credit_CNT less than BB_Credit;
c) each FC_Port shall set the BB_Credit_CNT value to zero at the end of Login or Relogin in a point-to-point topology, at the end of Login or Relogin to the Fabric in a Fabric topology, or upon recognition of any Primitive Sequence Protocol;
d) each FC_Port increments BB_Credit_CNT by one for each SOF_{x2} or SOF_{x3} transmitted and decrements by one for each R_RDY received; and
e) recognition of SOF_{x2} or SOF_{x3} shall be responded to by a transmission of an R_RDY when the buffer becomes available.

Managing BB_Credit_CNT is given in table 105. BB_Credit_CNT for E_Ports and B_Ports is specified in FC-SW-7.

Table 105 - Buffer-to-buffer flow control management

Activity	BB_Credit_CNT
FC_Port transmits any frame (including F_BSY(DF), F_BSY(LC), F_RJT, P_BSY, P_RJT or LCR)	Increment BB_Credit_CNT by one
FC_Port receives R_RDY	Decrement BB_Credit_CNT by one
FC_Port receives any frame (including F_BSY(DF), F_BSY(LC), F_RJT, P_BSY, P_RJT or LCR)	N/A
FC_Port transmits R_RDY	N/A

20.4.3 BB_Credit

BB_Credit represents the number of receive buffers supported by an FC_Port for receiving frames. BB_Credit values of the attached FC_Ports are mutually conveyed to each other during the Fabric Login through the Buffer-to-buffer Credit field of the FLOGI Common Service Parameters. The minimum or default value of BB_Credit is one.

BB_Credit is used as the controlling parameter in buffer-to-buffer flow control.

20.4.4 BB_Credit_CNT

BB_Credit_CNT is defined as the number of unacknowledged or outstanding frames awaiting R_RDY responses from the directly attached FC_Port. It represents the number of receive buffers that are occupied at the attached FC_Port. To track the number of frames transmitted for which R_RDY responses are outstanding, the transmitting FC_Port uses the BB_Credit_CNT.

20.4.5 BB_Credit management

BB_Credit management involves an FC_Port receiving the BB_Credit value from the FC_Port to which it is directly attached. Fabric Login is used to accomplish this. The Common Service Parameters interchanged during Fabric Login provide these values (see FC-LS-4).

The transmitting FC_Port is responsible to manage BB_Credit_CNT with BB_Credit as its upper bound.

20.4.6 Buffer-to-buffer flow control model

The buffer-to-buffer flow control model is illustrated in figure 85. The model includes flow control variables for a frame and R_RDY as its response, and the buffers for receiving frames. All possible responses to a Data frame are illustrated.

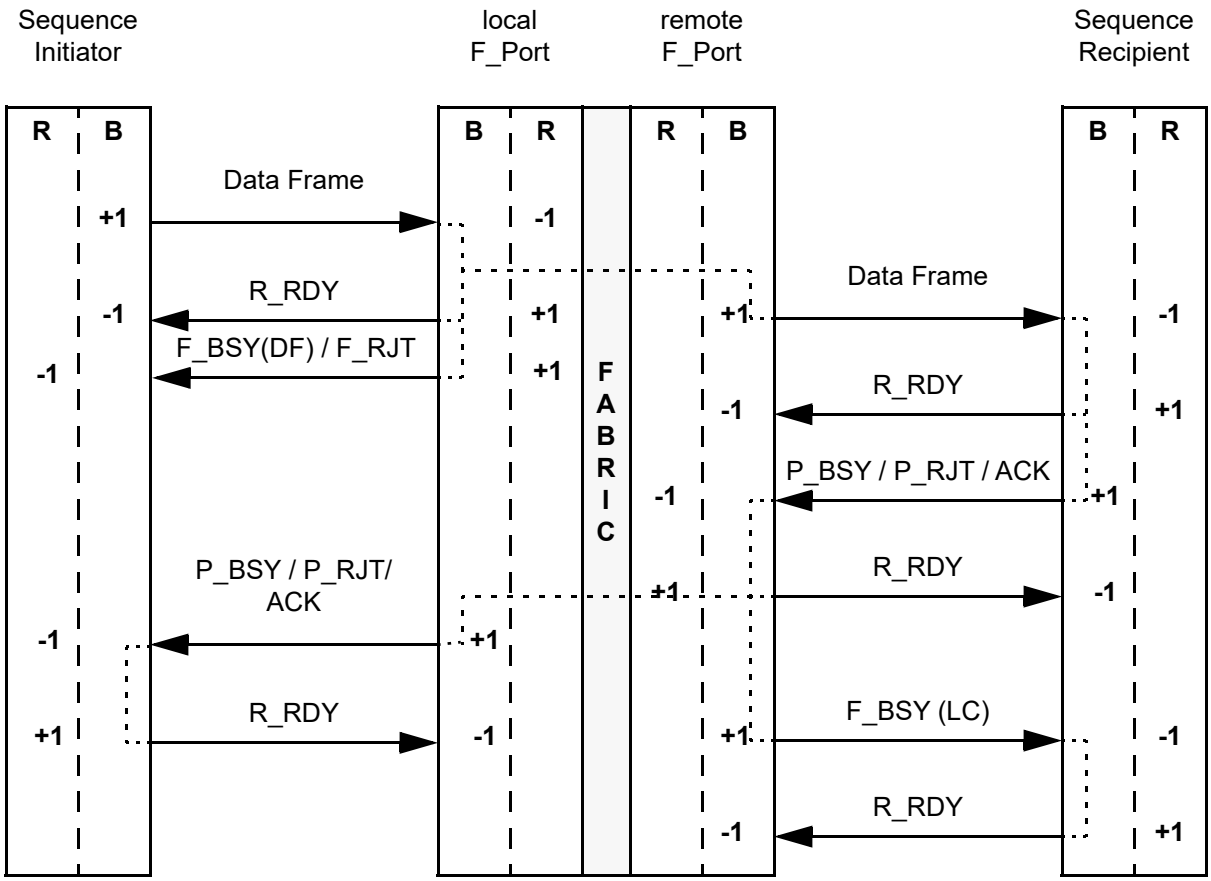

Key:

B: Columns showing changes in BB_Credit_CNT
R: Columns showing changes in buffers available for receiving frames
→ Solid lines with arrow heads denote frame flow.
- - - - - - - - - - Dotted lines indicate frame originations resulting from frame reception.

Figure 85 - Buffer-to-buffer flow control model

Each FC_Port provides a number of receive buffers. Each PN_Port obtains the allocation of receive buffers from the Fx_Port (or PN_Port in case of point-to-point topology) to which it is attached, as BB_Credit. Each Fx_Port obtains the allocation of receive buffers from the PN_Port to which it is attached, as total BB_Credit.

20.4.7 Class dependent frame flow

The class dependent flow of frames accomplishing buffer-to-buffer flow control for the following cases are illustrated in the figures referenced:

a) Class 2 with delivery or non-delivery to the Fabric (see figure 86). Possible responses from the Fx_Port or an Nx_Port within the Fabric (i.e., a Well-known address) to a Class 2 Data frame are illustrated;

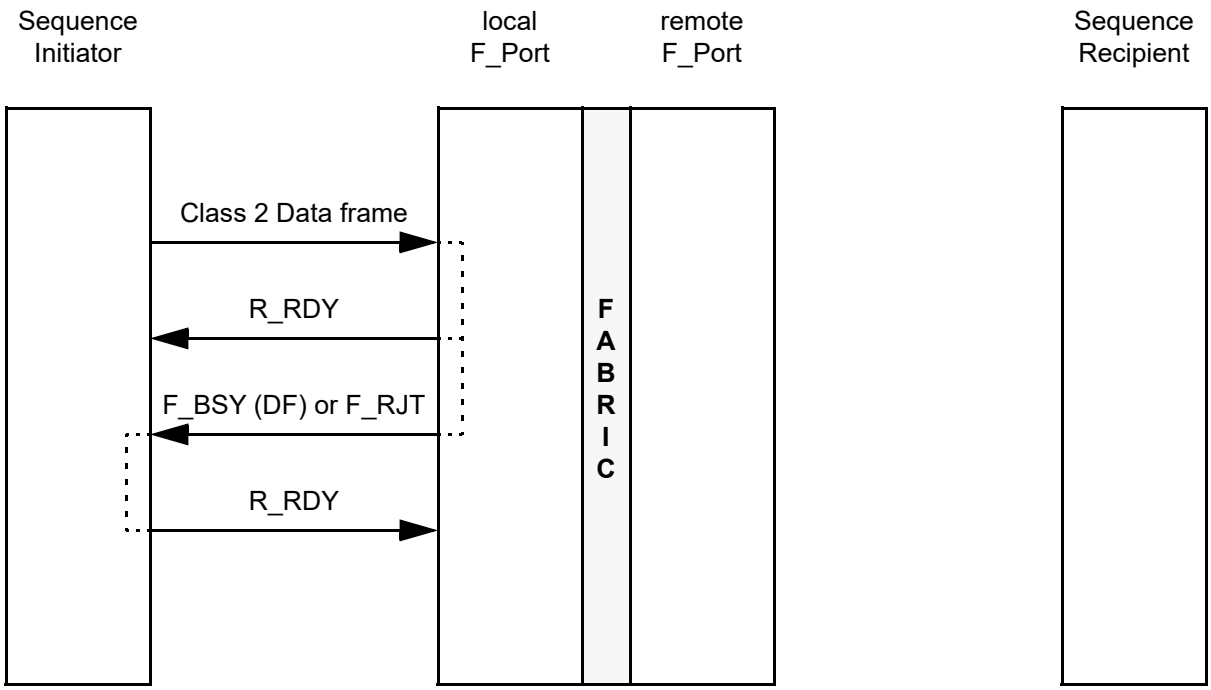

Key:

Solid lines with arrow heads denote frame flow.
Dotted lines indicate frame originations resulting from frame reception.

Figure 86 - Buffer-to-buffer - Class 2 frame flow with delivery or non-delivery to a Fabric

b) Class 2 with delivery or non-delivery to a PN_Port (see figure 87). Possible responses from the Fx_Port and the destination PN_Port to a Class 2 Data frame are illustrated; and

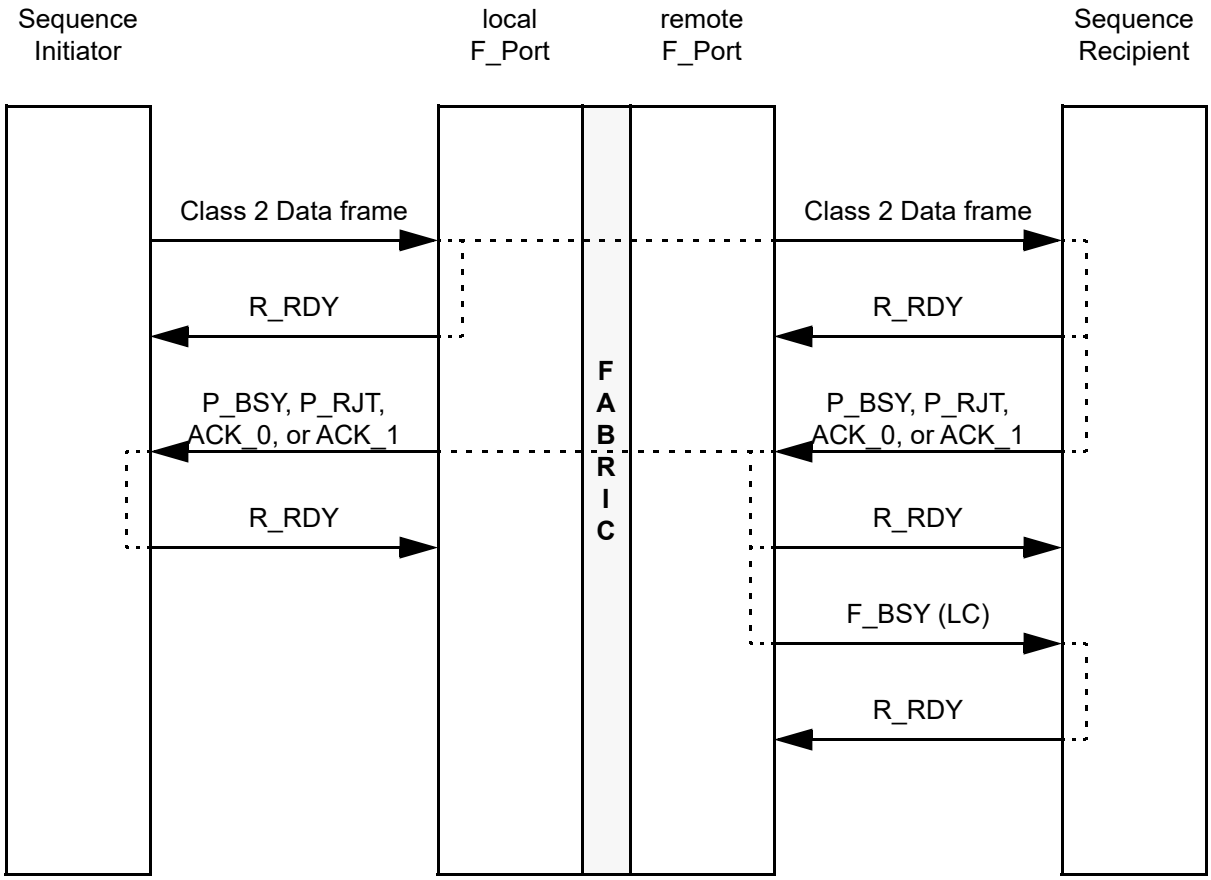

Key:

Solid lines with arrow heads denote frame flow.
Dotted lines indicate frame originations resulting from frame reception.

Figure 87 - Buffer-to-buffer - Class 2 frame flow with delivery or non-delivery to a PN_Port

c) Class 3 (see figure 88). Possible responses from the Fx_Port and the destination PN_Port to a Class 3 Data frame are illustrated.

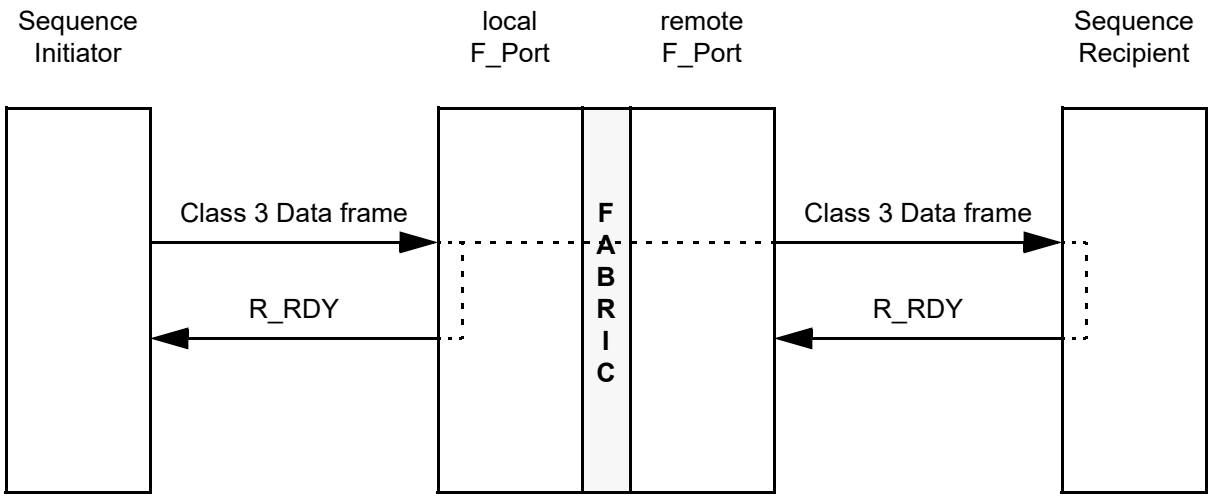

Key:

Solid lines with arrow heads denote frame flow.
Dotted lines indicate frame originations resulting from frame reception.

Figure 88 - Buffer-to-buffer - Class 3 frame flow

20.4.8 R_RDY

For any frames received at an FC_Port, an R_RDY is issued when a receive buffer is available. Validity of the frame is not implied by R_RDY.

20.4.9 BB_Credit Recovery

BB_Credit recovery as described in this clause shall only be performed when two FC_Ports, not operating in Arbitrated Loop mode, have logged in with each other and have agreed to a non-zero BB_SC_N value.

BB_Credit Recovery uses the BB_SCs primitive and the BB_SCr primitive to account for exchange of frames and R_RDY primitives:

a) the BB_SCs Primitive Signal shall indicate that a predetermined number ($2^{BB\_SC\_N}$) of frames were sent since the previous BB_SCs was sent. See FC-LS-4 for requirements for determining BB_SC_N. If the BB_SCs Primitive Signal is received by an Fx_Port, it shall be processed but shall not be passed through the Fabric; and

b) the BB_SCr Primitive Signal shall indicate that a predetermined number ($2^{BB\_SC\_N}$) of R_RDY Primitive Signals were sent since the previous BB_SCr was sent. See FC-LS-4 for requirements for determining BB_SC_N. If the BB_SCr Primitive Signal is received by an Fx_Port, it shall be processed but shall not be passed through the Fabric.

An FC_Port that supports BB_Credit Recovery, shall maintain the following BB_Credit Recovery counters:

a) BB_SC_N is the log2 of BB_Credit Recovery modulus;
b) BB_RDY_N counts the number of R_RDY primitives received modulo $2^{BB\_SC\_N}$; and
c) BB_FRM_N counts the number of frames received modulo $2^{BB\_SC\_N}$.

After having transmitted or received an LS_ACC during the processing of an appropriate Login, whether the first Login after reset or a Relogin:

a) if the BB_SC_N value communicated by the other FC_Port in the Login is zero, then the FC_Port shall set BB_SC_N, BB_RDY_N, and BB_FRM_N to zero; or
b) if the BB_SC_N value communicated by the other FC_Port is not zero, then the FC_Port shall set BB_SC_N to the greater of the BB_SC_N value from the other FC_Port's Login parameters or BB_SC_N value from its own Login parameters, and set BB_RDY_N and BB_FRM_N to zero.

An FC_Port capable of supporting BB_Credit Recovery shall:

a) if an appropriate Login has successfully completed, then set BB_SC_N to the Login value upon recognition of the Link Reset Protocol;
b) set BB_RDY_N and BB_FRM_N to zero upon recognition of the Link Reset Protocol; and
c) set BB_SC_N, BB_RDY_N, and BB_FRM_N to zero upon recognition of the Link Initialization Protocol or Link Failure Protocol.

BB_SC_N, BB_RDY_N, and BB_FRM_N shall be set to zero after explicit or implicit logout.

To recover any lost BB_Credit, each FC_Port shall perform the following operations. Each operation shall be processed atomically (i.e., each operation shall be completed before any other BB_Credit recovery operation):

a) transmit a BB_SCs primitive if $2^{BB\_SC\_N}$ number of frames that require BB_Credit have been sent since the completion of Login, link reset, or since the last time a BB_SCs primitive was sent;
b) transmit a BB_SCr primitive if $2^{BB\_SC\_N}$ number of R_RDY primitives have been sent since the completion of Login, link reset, or since the last time a BB_SCr primitive was sent;
c) after receiving each R_RDY, increment BB_RDY_N by one. If BB_RDY_N equals $2^{BB\_SC\_N}$, set BB_RDY_N to zero;
d) after receiving each frame, increment BB_FRM_N by one. If BB_FRM_N equals $2^{BB\_SC\_N}$, set BB_FRM_N to zero;
e) when a BB_SCr primitive is received, the number of BB_Credits lost may be calculated using the following equation:

   $$\text{BB\_Credits lost} = (2^{BB\_SC\_N} - \text{BB\_RDY\_N}) \text{ modulo } 2^{BB\_SC\_N}.$$

   The BB_Credit_CNT shall then be decremented by the number of BB_Credits lost. BB_RDY_N is then set to zero, before the next R_RDY is received; and
f) when a BB_SCs primitive is received, the number of BB_Credits the other FC_Port has lost may be calculated using the following equation:

   $$\text{BB\_Credits lost by other FC\_Port} = (2^{BB\_SC\_N} - \text{BB\_FRM\_N}) \text{ modulo } 2^{BB\_SC\_N}.$$

   One R_RDY shall be resent for each BB_Credit that is lost. BB_FRM_N shall be set to zero before the next frame is received.

When the two FC_Ports performing Login specify different non-zero values of BB_SC_N, the larger value shall be used. If either FC_Port specifies a BB_SC_N value of zero, the BB_Credit recovery process shall not be performed and no BB_SCx primitive shall be sent.

NOTE 50 - If all frames or R_RDY primitives sent between two BB_SCx primitives are lost, $2^{BB\_SC\_N}$ number of BB_Credits are lost, and are not recovered by the scheme outlined in 20.4.9. Therefore BB_SC_N should be chosen so that the probability of loosing $2^{BB\_SC\_N}$ number of consecutive frames or R_RDY primitives is deemed negligible. The recommended value of BB_SC_N is 8.

20.4.10 Alternate buffer-to-buffer Credit management

An alternate buffer-to-buffer Credit management may be used instead of the one described in 20.4.

NOTE 51 - Alternate buffer-to-buffer Credit management is specified in FC-AL-2, and is currently used only in Arbitrated Loop topologies.

The use of alternate buffer-to-buffer Credit management shall be indicated by the PN_Port through an N_Port Login Service Parameter during Fabric Login and N_Port Login (see FC-LS-4).

Alternate BB_Credit management rules are summarized (see FC-AL-2 for additional details):

a) each Port is responsible for managing the Alternate BB_Credit;
b) during Login, BB_Credit shall be set to a value that represents the number of receive buffers that a FC_Port shall guarantee to have available as soon as a circuit is established. If this value is greater than zero, the FC_Port may start transmitting a frame without waiting for R_RDYs. If this value is equal to zero, the sending FC_Port shall wait to receive at least one R_RDY, before transmitting a frame;
c) the receiving FC_Port shall transmit at least one R_RDY, representing the number of additional receive buffers available, before, during, or after the reception of frames;
d) the transmitting FC_Port shall decrement BB_Credit by one for each frame transmitted and increment by one for each R_RDY received; and
e) for transmitting frames, the Available Credit shall be greater than zero. The Available Credit at any given time is expressed by the following equation:

   Available Credit = Login_BB_Credit + (Number of R_RDYs received - Login_BB_Credit)
   - Number of frames transmitted

   where

   A) number of R_RDYs received ≥ Login_BB_Credit; and
   B) the parenthetical expression is applicable only if it is positive, otherwise it is zero.

20.5 Combined flow control considerations

20.5.1 BSY / RJT in flow control

In Class 2 end-to-end flow control, F_BSY, F_RJT, P_BSY or P_RJT may occur for any Data frame. Each of these responses contributes to end-to-end and buffer-to-buffer flow controls.

End-to-end Class 2 buffers at the Sequence Recipient Nx_Port are shared by multiple source Nx_Ports that may be multiplexing Data frames. This Class 2 multiplexing requires the distribution of Class 2 EE_Credit to each source Nx_Port to be honored to prevent BSY or RJT. Unless an adequate number of end-to-end Class 2 buffers are available and EE_Credit distribution is honored, a BSY or RJT may occur in Class 2. If buffer-to-buffer flow control rules are not obeyed by the transmitter, the results are unpredictable (e.g., if a Class 2 frame is received with no BB_Credit available and the receiver does not have a buffer to receive it, the receiver may discard the frame without issuing a P_BSY or P_RJT).

20.5.2 LCR in flow control

LCR does not need EE_Credit and does not participate in end-to-end flow control. LCR participates only in buffer-to-buffer flow control as Class 2. (see figure 89). In response to an LCR, the Fabric shall issue an R_RDY and may issue a F_BSY or F_RJT. The destination PN_Port shall issue an R_RDY and may issue a P_RJT (see 15.3.3.4). The destination Nx_Port shall not issue a P_BSY to an LCR.

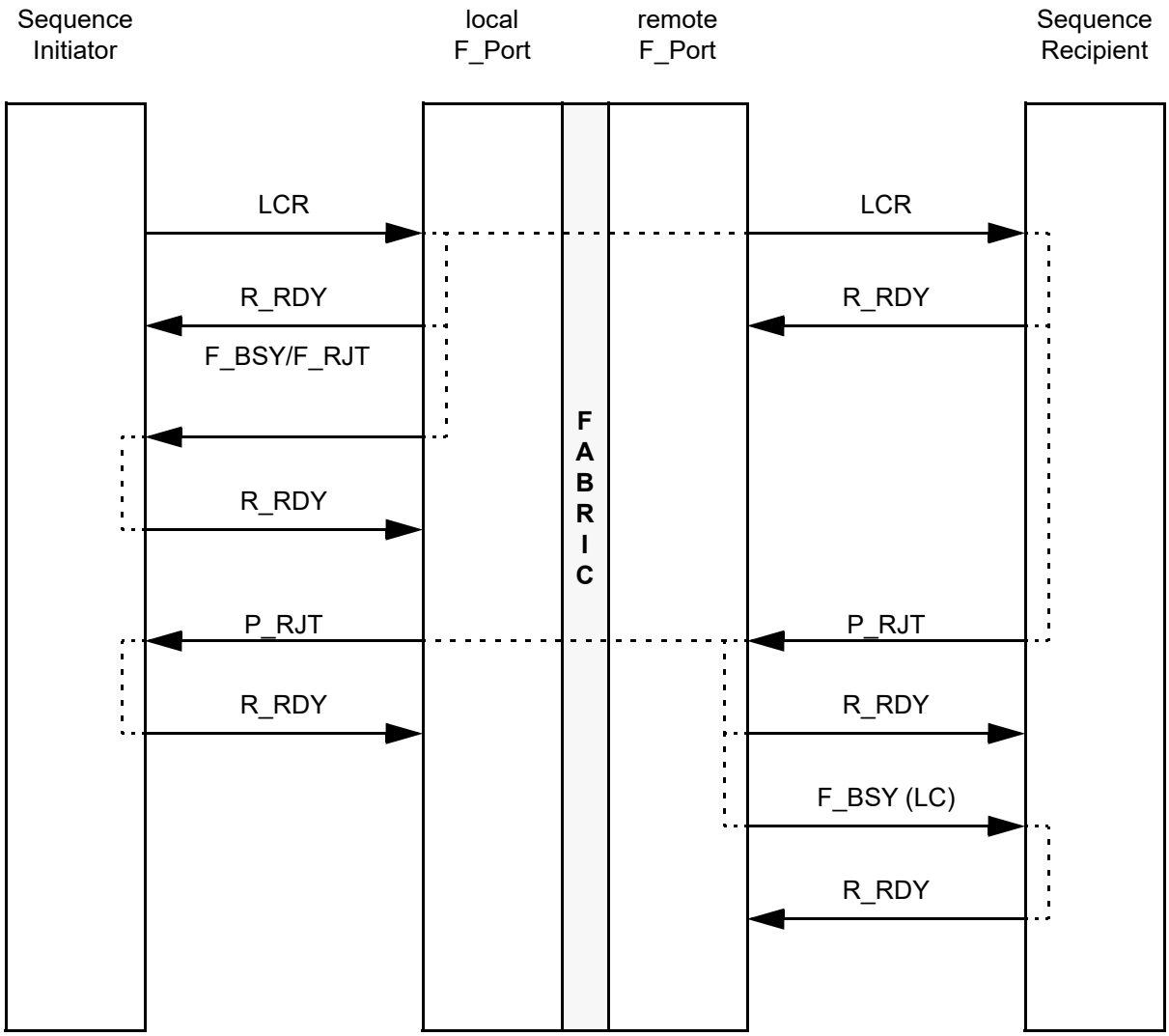

Key:

Solid lines with arrow heads denote frame flow.
Dotted lines indicate frame originations resulting from frame reception.

Figure 89 - LCR frame flow and possible responses

Flow control model for an LCR frame is illustrated in figure 90 that covers the buffer-to-buffer flow control for all possible responses to an LCR.

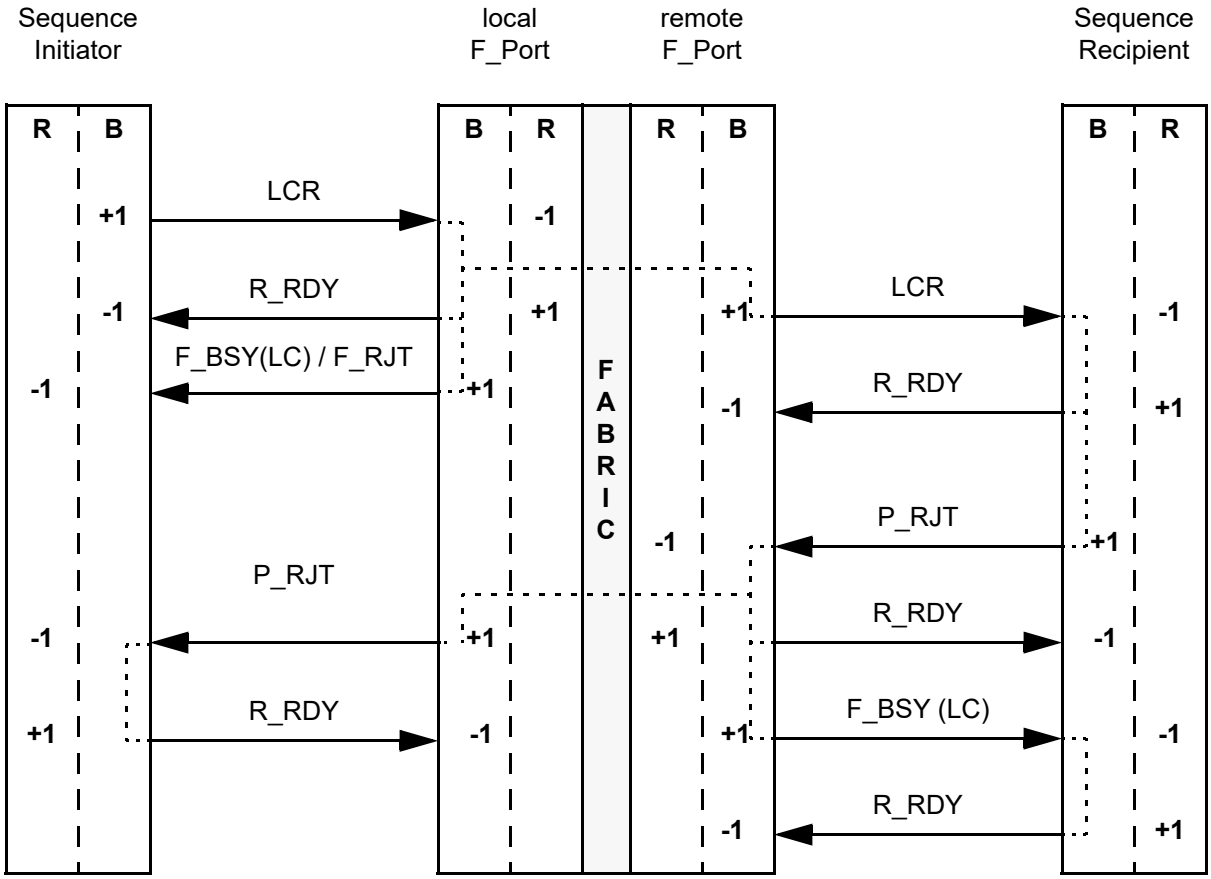

Key:

B: Columns showing changes in BB_Credit_CNT
R: Columns showing changes in buffers available for receiving frames
→ Solid lines with arrow heads denote frame flow.
- - - - - - - - - - Dotted lines indicate frame originations resulting from frame reception.

Figure 90 - LCR flow control model

After issuing the LCR, the Sequence Initiator shall set its EE_Credit_CNT to zero for the destination Nx_Port. The Sequence Initiator shall not wait for any response before setting EE_Credit_CNT to zero (see 20.3.1).

20.5.3 Integrated Class 2 flow control

Integrated buffer-to-buffer and end-to-end flow controls applicable to Class 2 is illustrated in figure 91 for a Data frame from the Sequence Initiator and its response from the Sequence Recipient.

Integrated Class 2 flow control management is summarized in table 106.

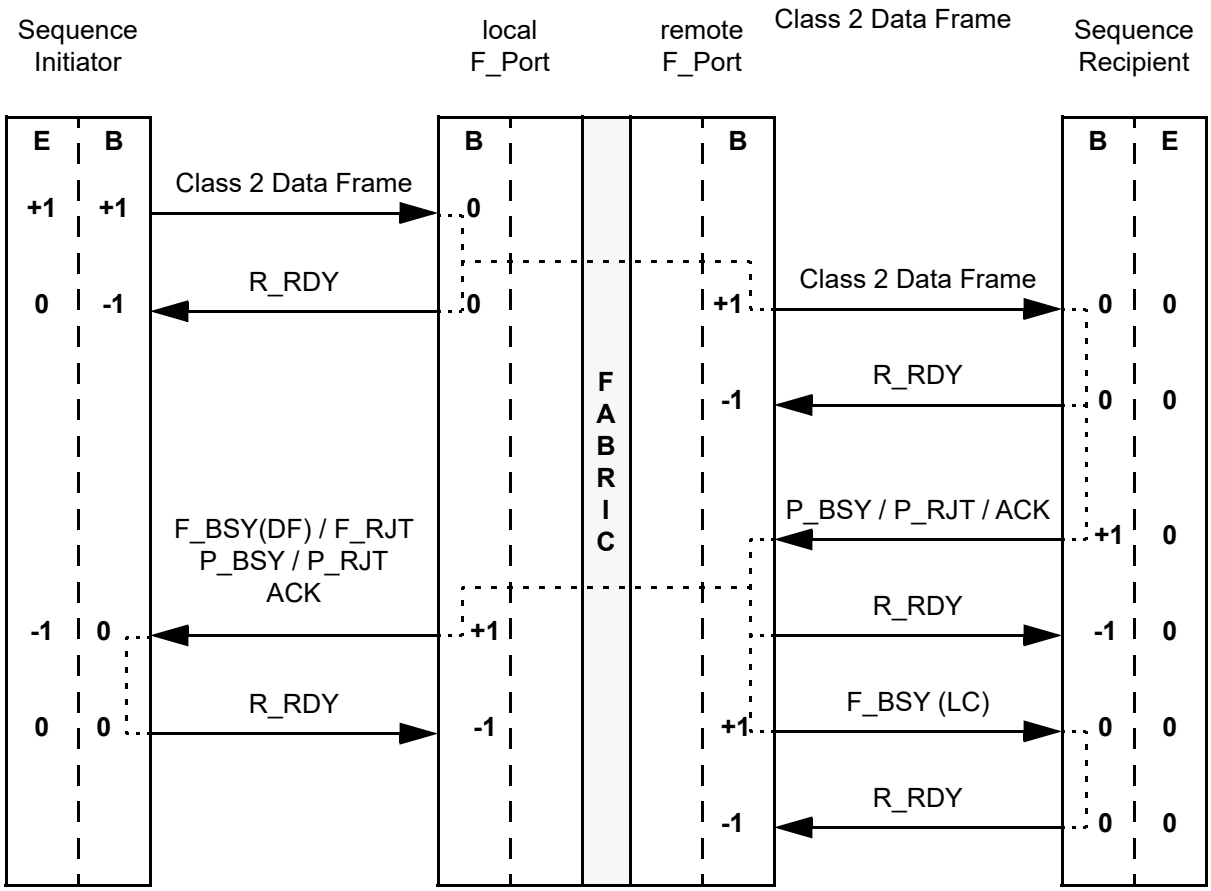

Key:

B: Columns showing changes in BB_Credit_CNT
E: Columns showing changes in EE_Credit_CNT
→ Solid lines with arrow heads denote frame flow.
- - - - - - - - - - Dotted lines indicate frame originations resulting from frame reception.

Figure 91 - Integrated Class 2 flow control

Table 106 - Integrated Class 2 flow control management

Activity	Nx_Port EE_Credit_CNT	PN_Port BB_Credit_CNT	Fx_Port BB_Credit_CNT
Port transmits a Class 2 Data frame	Increment by one	Increment by one	Increment by one
Port transmits an LCR	Set to zero	Increment by one	Increment by one
Port receives R_RDY	N/A	Decrement by one	Decrement by one
Port receives F_BSY(DF), F_RJT, P_BSY, or P_RJT	Decrement by one	N/A	N/A
Port receives F_BSY(LC)	N/A	N/A	N/A
Port receives ACK_1 (Parameter field: History bit = 1, ACK_CNT = 1)	Decrement by one	N/A	N/A
Port receives ACK_1 (Parameter field: History bit = 0, ACK_CNT = 1)	a) subtract 1 for current SEQ_CNT of the ACK_1; and b) subtract one for each unacknowledged lower SEQ_CNT (see 15.3.2.2).	N/A	N/A
Port receives ACK_0 (Parameter field: History bit = 0, ACK_CNT = 0)	N/A (see 15.3.2.2)	N/A	N/A
Port receives an LCR	N/A (see a))	N/A	N/A
Port receives a Class 2 Data frame	N/A	N/A	N/A
Port transmits R_RDY	N/A	N/A	N/A
Port transmits F_BSY, F_RJT, P_BSY, P_RJT, or ACK	N/A	+1	+1

Key: N/A - Not Applicable

a) On receipt of LCR, the Sequence Recipient resets buffer (see 15.3.4)

Editors Note 1 - CWC: Footnote (a) is not used anywhere in this table.

21 Segmentation and reassembly

21.1 Scope

Segmentation and reassembly are functions of the FC-2V sublevel.

21.2 Introduction

Mapping application data to Upper Level Protocol (ULP) data blocks is outside the scope of this standard. Mapping ULP data blocks to FC-4 Information Units (IUs) is specified in FC-4 level standards (e.g., FCP-4, FC-SB-6). FC-4 IUs are mapped to Sequences. The transport of Sequences using Fibre Channel frames is specified in this standard. This subclause introduces several features of the FC-2V sublevel that support efficient mapping of IUs onto frames:

a) identifying and classifying IUs (see 21.3);
b) multiplexing IUs within a Sequence (see 21.4);
c) relative offset of Data_Frames in an IU (see 21.5); and
d) transporting portions of an IU out of relative offset order (see 21.6).

Together, the rules for these features control the segmentation of IUs into transmitted frames and the reassembly of IUs from received frames.

21.3 Identifying and classifying IUs

FC-2V defines the R_CTL field in the Frame_Header (see 12.3) that may be used to classify frames for different treatment by the Nx_Port that receives them. All FC-4 IUs are transported in frames with the ROUTING subfield of the R_CTL field set to Device_Data (see 12.3.2). The INFORMATION subfield of the R_CTL field (i.e., the Information Category) may be used at the discretion of individual FC-4 protocols to further classify how IUs are treated. Each FC-4 IU shall be transported over Fibre Channel as Device_Data frames within a single Sequence that have the same value of the R_CTL field. Within a single Sequence, all Device_Data frames with the same Information Category shall be part of the same IU. Device_Data frames with different Information Categories shall not be part of the same IU. Frames in different Sequences shall not be part of the same IU.

21.4 Multiplexing IUs within a Sequence

An Nx_Port indicates the extent of its ability to multiplex IUs of different Information Categories in the same Sequence by setting the Categories per Sequence subfield of the Class Service Parameters during N_Port Login (see FC-LS-4). The FC-4 shall follow the Categories per Sequence ability of the Sequence Initiator and the Sequence Recipient. If the Sequence Initiator and the Sequence Recipient permit more than one Information Category per Sequence, the FC-4 may direct the FC-2 to combine IUs of different Information Categories in a single Sequence. If frames of different Information Categories are received within a single Sequence consistent with the abilities indicated by the Sequence Recipient during N_Port Login, the Sequence Recipient shall reassemble each Information Category into a different IU.

NOTE 52 - An FC-4 may require support for more than one Information Category per Sequence.

21.5 Relative offset of Data_Frames in an IU

Each IU is mapped to a relative offset space that is arbitrarily defined by the FC-4. Any relationship between the relative offset spaces of different IUs is outside the scope of this standard, even if the IUs are multiplexed into a single Sequence by using different Information Categories. Each IU presented by an FC-4 to FC-2 for transmission shall be transmitted within a single Sequence and may be divided into frames by FC-2. Received frames with the same Information Category within a single Sequence shall be reassembled into a single IU for delivery to the FC-4.

An Nx_Port may be able to use the Parameter field in the Frame_Header (see 12.13) of each frame that carries an IU to specify the relative offset of the Payload of the frame within the relative offset space of the IU. An Nx_Port indicates its ability to send and receive relative offset information by setting the relative offset by category subfield of the Common Service Parameters during N_Port Login (see FC-LS-4). A Sequence Initiator shall follow the relative offset by category capability indicated by the Sequence Recipient.

If the Parameter field of the Frame_Header of a transmitted frame is used to specify relative offset, the Parameter field of the frame shall be set to the relative offset of the first byte of the Payload of the frame within the IU. If the Parameter field of the Frame_Header of a received frame is used to specify relative offset, the first byte of the Payload of the frame shall be placed within the IU at the relative offset specified by the Parameter field.

If the Parameter field of the Frame_Header of a frame is not used to indicate relative offset, the first byte of the Payload of the frame shall be located within the IU following the last byte of the Payload of the frame with the next lesser SEQ_CNT among frames of the same Information Category. If the SEQ_CNT wraps to zero from FF FFh within a Sequence, the reassembly shall be continued according to modulo 65 536 arithmetic (i.e., SEQ_CNT = 00 00h follows SEQ_CNT = FF FFh).

NOTE 53 - An FC-4 may require the ability to use the Parameter field in the Frame_Header for relative offset.

21.6 Transporting portions of an IU out of relative offset order

An Nx_Port that is able to specify the relative offset of frames may be able to accept, transport, and deliver portions of an IU in an order other than increasing relative offset address order (i.e., random relative offset). An Nx_Port indicates its ability to accept, transport, and deliver portions of an IU in an order other than increasing relative offset order by setting the random relative offset bit of the Common Service Parameters during N_Port Login (see FC-LS-4). An Nx_Port indicates its inability to accept, transport, and deliver portions of an IU in an order other than byte order by setting the continuously increasing relative offset bit and resetting the random relative offset bit of the Common Service Parameters during N_Port Login. The Sequence Initiator shall follow the random relative offset and continuously increasing relative offset capabilities indicated by the Sequence Recipient.

If an Nx_Port supports random relative offset, an FC-4 at that Nx_Port may request transmission of an IU in portions to another Nx_Port that supports random relative offset. Each portion of the IU shall specify its beginning relative offset, and the beginning relative offset of each portion of the IU may be independent of the relative offset of other portions.

If an Nx_Port does not support random relative offset, an FC-4 shall request transmission of an IU in a single portion to or from that Nx_Port. The first frame of the IU shall specify its beginning relative offset, and the relative offset of each successive frame of the IU shall be the first byte following the last byte of the prior frame of the IU.

NOTE 54 - An FC-4 may require support for either random relative offset or continuously increasing relative offset or both.

By appropriate use of relative offset, an IU may occupy all, part, or multiple noncontiguous portions, of the relative offset space into which it is mapped.

21.7 Login

The following Service Parameters related to segmentation and reassembly are exchanged during N_Port Login (see FC-LS-4):

a) Categories per Sequence;
b) relative offset by Information Category;
c) continuously increasing relative offset; and
d) random relative offset.

Through the exchange of these Login parameters, the Nx_Port indicates its segmentation and reassembly requirements as a Sequence Recipient. The Nx_Port indicates its requirement for Categories per Sequence separately for each class of service it supports. The Nx_Port indicates relative offset support or non-support for each Information Category independent of class of service. For the Information Categories that support relative offset, the Nx_Port collectively indicates its requirement for continuously increasing or random relative offset independent of class of service.

The Sequence Initiator shall follow the segmentation and reassembly requirements of the Sequence Recipient.

21.8 Segmentation rules

Segmentation summary rules are listed and referred to table 107:

a) the Sequence Initiator shall segment each Information Category within the relative offset space specified by the sending upper level. The Sequence Initiator shall follow the relative offset requirements of the Sequence Recipient for Information Categories;
b) an upper level at the sending end shall specify to the sending FC-2 one or more IUs to be transferred as a Sequence, the Information Category for each IU, an relative offset space, and the initial relative offset for each Information Category. The initial relative offset value may be zero or non-zero;
c) the Sequence Initiator shall use the specified relative offset space for each Information Category and transfer one or more IUs specified in a single Sequence;
d) if the Sequence Recipient does not support relative offset for one or more Information Categories, the Sequence Initiator shall transmit each of these Information Categories as a contiguous IU. The Sequence Initiator shall set the relative offset present bit in F_CTL to zero, indicating that the parameter field is not meaningful to FC-2 and shall be passed to the upper level;
e) if the Sequence Recipient supports relative offset for one or more Information Categories and has specified during Login this support as continuously increasing relative offset, the Sequence Initiator shall transmit each of these Information Categories with continuously increasing relative offset:
    A) the Sequence Initiator shall set the relative offset present F_CTL bit to one;

B) the Sequence Initiator shall use the initial relative offset specified by the upper level for the relative offset RO_i in the first frame of each IU, namely, $RO_i(0)$ = initial relative offset for the Information Category i;

C) the Sequence Initiator shall use for all other frames of the IU, the relative offset computed as follows: $RO_i(n+1) = RO_i(n)$ + Length of $Payload_i(n)$ where n is ≥ 0 and represents the consecutive frame count of frames for a given Information Category within a single Sequence; and

D) above steps A) through C) shall be repeated independently for each IU within the Sequence;

and

f) if the Sequence Recipient supports relative offset for one or more Information Categories and has specified during Login this support as random relative offset, the Sequence Initiator is permitted to transmit each of these Information Categories with random relative offset:

A) the Sequence Initiator shall set the relative offset present F_CTL bit to one;

B) the Sequence Initiator shall use for all frames of the IU a relative offset within the relative offset space of the Information Category; and

C) above steps A) and B) shall be repeated independently for each IU within the Sequence.

21.9 Reassembly rules

Reassembly rules are listed and referred to table 107.

a) the Sequence Recipient shall reassemble each Information Category received within the Sequence. The Sequence Recipient shall use relative offset or SEQ_CNT field, as specified, to perform the reassembly and make the IUs available to the receiving upper level as sent by the sending upper level;

b) the Sequence Recipient shall reassemble each Information Category within its relative offset space specified by the sending upper level;

c) if the Sequence Recipient receives a frame in an Information Category for which the Sequence Recipient has specified during Login non support of relative offset, and the relative offset present bit in the frame (F_CTL bit 3) is set to zero, the Sequence Recipient shall reassemble that frame using SEQ_CNT;

d) if the Sequence Recipient receives a frame in an Information Category for which the Sequence Recipient has specified during Login non support of relative offset, and the relative offset present bit in the frame (F_CTL bit 3) is set to one, the Sequence Recipient shall discard the frame, and in an acknowledged class of service shall issue a P_RJT with a reason code of "relative offset not supported";

e) if the Sequence Recipient receives a frame in an Information Category for which the Sequence Recipient has specified during Login support of relative offset and the relative offset present bit in the frame (F_CTL bit) is set to one, the Sequence Recipient shall reassemble that frame using relative offset;

f) if the Sequence Recipient receives a frame in an Information Category for which the Sequence Recipient has specified during Login support of relative offset and the relative offset present bit in the frame (F_CTL bit 3) is set to zero, the Sequence Recipient shall reassemble that frame using SEQ_CNT; and

g) if the Sequence Recipient supports continuously increasing relative offset and detects random relative offsets, the Sequence Recipient shall discard the frame, and in an acknowledged class of service shall issue P_RJT with the reason code of "relative offset out of bounds".

Table 107 - Segmentation and reassembly rules summary

Case	Relative Offset support by Sequence Recipient	Sequence Initiator action (Segmentation)	Sequence Recipient action (Reassembly)
1	Not supported	F_CTL relative offset present bit = 0 Parameter field meaning is protocol and Information Unit specific	Relative offset shall not be used (ignore parameter field) SEQ_CNT shall be used
		F_CTL relative offset present bit = 1 Parameter field = relative offset	Use P_RJT reason code = relative offset not supported
2	Continuously increasing relative offset supported	F_CTL relative offset present bit = 1 Parameter field = relative offset First frame of an IU: RO_i (0) = initial relative offset for the IU specified All other frames of the IU: RO_i (n + 1) = RO_i (n) + Length of $Payload_i$ (n)	Relative offset shall be used
		F_CTL relative offset present bit = 0 Parameter field meaning is protocol and Information Unit specific	Ignore parameter field SEQ_CNT shall be used
3	Random relative offset supported	F_CTL relative offset present bit = 1. Parameter field = relative offset. The Initial relative offset for an IU is permitted to be random.	Relative offset shall be used
		F_CTL relative offset present bit = 0 Parameter field meaning is protocol and Information Unit specific	Ignore parameter field SEQ_CNT shall be used

Key: RO_i(n) is the relative offset of frame n of Information Category i within a Sequence. RO_i(n+1) is the relative offset of the first frame of Information Category i that follows frame n of Information Category i within a Sequence.

a) If relative offset value in the Parameter field is out of bounds, the Sequence Recipient shall issue a P_RJT with a reason code of “Invalid Parameter field”.

22 Error detection/recovery

22.1 Scope

Error detection and recovery are functions of both FC-2P and FC-2V.

22.2 Introduction

Link integrity and Sequence integrity are the two fundamental levels of error detection in this standard. Link integrity focuses on the inherent quality of the received transmission signal. When the integrity of the link is in question, a hierarchy of Primitive Sequences is used to reestablish link integrity. When Primitive Sequence Protocols are performed, additional data recovery on a Sequence basis may be required.

A Sequence within an Exchange provides the basis for ensuring the integrity of the IU transmitted and received. Exchange management ensures that Sequences are delivered in the manner specified by the Exchange Error Policy (see 22.5.4.3). Each frame within a Sequence is tracked on the basis of Exchange_ID, Sequence_ID, and a SEQ_CNT within the Sequence. Each frame is verified for validity during reception. Sequence retransmission may be used to recover from any frame errors within the Sequence and requires involvement, guidance, or authorization from an upper level.

Credit loss is an indirect result of frame loss or errors. Credit loss is discussed in regard to methods available to reclaim apparent lost Credit resulting from other errors. See clause 20 for a more complete discussion on flow control, buffer-to-buffer Credit, and end-to-end Credit.

22.3 Timeout periods

22.3.1 Scope

These timeout periods may be used in either FC-2P or FC-2V.

22.3.2 General

The actual value used for a timeout shall not be less than the specified value and shall not exceed the specified value by more than 20%.

22.3.3 R_T_TOV

The Receiver_Transmitter timeout value (R_T_TOV) is used by the receiver logic to detect Loss-of-Synchronization. The default value for R_T_TOV is 100 milliseconds. A shorter value of 100 microseconds is allowed. FC_Ports that use the shorter value indicate this by setting the R_T_TOV bit in the Common Service Parameters during Login. An FC_Port may determine another FC_Port's R_T_TOV value using the Read Timeout Value (RTV) ELS (see FC-LS-4).

22.3.4 E_D_TOV

The Error_Detect_Timeout Value (E_D_TOV) is used as the timeout value for detecting an error condition. The value of E_D_TOV represents a timeout value for detection of a response to a timed event (i.e., during Data frame transmission it represents a timeout value for a Data frame to be delivered, the destination Nx_Port to transmit a Link_Response, and the Link_Response to be delivered to the Sequence Initiator).

The E_D_TOV value selected should consider configuration and Nx_Port processing parameters. The default value is 2 seconds. However, a valid E_D_TOV value shall also adhere to the proper relationship to the R_A_TOV value. When an Nx_Port performs Fabric Login, the Common Service Parameters provided by the Fx_Port specify the proper value for E_D_TOV.

When an Nx_Port performs N_Port Login in a point-to-point topology, the Common Service Parameters provided by each Nx_Port specify a value for E_D_TOV. If the two values differ, each Nx_Port shall use the longer time. An FC_Port may determine another FC_Port's value for E_D_TOV via the Read Timeout Value (RTV) ELS (see FC-LS-4). Timeout values as specified in the Payload of the LS_ACC are counts of either 1 ms or 1 ns increments, depending on the resolution specified (e.g., a value of 00 00 00 0Ah specifies a time period of either 10 ms or 10 ns).

There are three cases when E_D_TOV is used as an upper limit, that is, an action shall be performed in less than an E_D_TOV timeout period:

a) transmission of consecutive Data frames within a single Sequence;
b) retransmission of a Class 2 Data frame in response to an F_BSY or P_BSY; and
c) transmission of ACK frames from the point in time that the event that prompted the acknowledgment action.

For all other cases, E_D_TOV shall expire before an action is taken. Two such examples include:

a) Link timeout (see 22.5.2); and
b) Sequence timeout (see 22.5.3).

22.3.5 R_A_TOV

The Resource_Allocation_Timeout Value (R_A_TOV) is used as the timeout value for determining when to reinstate a Recovery_Qualifier. The value of R_A_TOV represents E_D_TOV plus twice the maximum time that a frame may be delayed within a Fabric and still be delivered. The default value of R_A_TOV is 10 seconds.

When an Nx_Port performs Fabric Login, the Common Service Parameters provided by the Fx_Port specify the value for R_A_TOV. When an Nx_Port performs N_Port Login in a point-to-point topology, the Common Service Parameters provided by each Nx_Port only specify a value for E_D_TOV. R_A_TOV shall be set to twice the E_D_TOV value in a point-to-point topology. An FC_Port may determine another FC_Port's value for R_A_TOV via the RTV ELS (see FC-LS-4).

When R_A_TOV is used to determine when to reuse an Nx_Port resource (i.e., Recovery_Qualifier), the resource shall not be reused until R_A_TOV has expired for all frames previously transmitted that fall within the SEQ_CNT range of the Recovery_Qualifier. This may be accomplished by restarting the R_A_TOV timer as each Data frame of a Sequence is transmitted. Other techniques not specified by this standard may also be employed.

From the Fabric viewpoint, the maximum time that a frame may be delayed within the Fabric and still be delivered is in the range of 1 to 2^{31} -1 ms. The Fabric shall ensure delivery within the maximum delivery time by requiring each Fabric Element to timeout frames stored in receive buffers within the Element. Individual Elements may use different timeout values, possibly one for each class. The maximum Fabric delivery time is variable and is the cumulative timeout value for elements along the path or paths joining the source and destination Nx_Ports.

22.3.6 F_D_TOV

The Frame_Discard_Timeout Value (F_D_TOV) is used as the timeout value for detecting when a frame should be discarded and the associated buffer should be freed. If a frame is discarded by an FC_Port from the receive buffer prior to an R_RDY being issued for that frame, then an R_RDY is issued to indicate a receive buffer is available. The value of F_D_TOV should be greater than two times the R_T_TOV value and less than half the E_D_TOV value. If two times the R_T_TOV value is greater than half the E_D_TOV value, then the value of F_D_TOV should be set to half the E_D_TOV value. An FC_Port's F_D_TOV value is exchanged with another FC_Port's F_D_TOV value using the Exchange Diagnostic Capabilities (EDC) ELS (see FC-LS-5).

22.4 Link errors

22.4.1 Scope

Link error detection and recovery are functions of the FC-2P sublevel.

22.4.2 Link Failure timeouts

A Link Failure is detected under the following timeout conditions:

a) Loss-of-Signal (see 6.2);
b) Loss-of-Synchronization (see 6.2) > timeout period (R_T_TOV); and
c) Link Reset Protocol timeout (> R_T_TOV) (see 7.8.3).

22.4.3 Link Failure

The first level of link error detection is at the receiver. Link Failure is detected under the following conditions:

a) Link Failure timeouts (see 22.4.2); or
b) reception of the NOS Primitive Sequence (see 7.6.1).

Recovery from Link Failure is accomplished by performing the Link Failure Protocol (see 7.8.4).

22.4.4 Code violations

Code violations are link errors that result from an invalid transmission code point or disparity error. If a code violation occurs during Primitive Signals, it is recorded in the Link Error Status Block by incrementing the Invalid Transmission Word count by one. If a code violation occurs during frame reception (see 11.3.9), the Link Error Status Block shall also be updated by incrementing the Invalid Transmission Word count by one and the frame identified as invalid. The Data_Field of the invalid frame may be discarded or processed based on the Exchange Error Policy.

NOTE 55 - When a code violation is detected, the actual location of the error may precede the location at which the code violation is detected (see table 6). In particular, even if the code violation is detected following the Frame_Header, fields in the header may not be valid.

22.4.5 Primitive Sequence protocol error

If a PN_Port is in the Active State and it receives LRR, it shall detect a Primitive Sequence protocol error that is counted in the LESB.

22.4.6 Link Error Recovery

The Link Recovery hierarchy is shown in figure 92.

The recovery protocols are nested and organized from the most serious to least serious link action.

a) Link Failure Protocol (see 7.8.4);
b) Link Initialization Protocol (see 7.8.2); and
c) Link Reset Protocol (see 7.8.3).

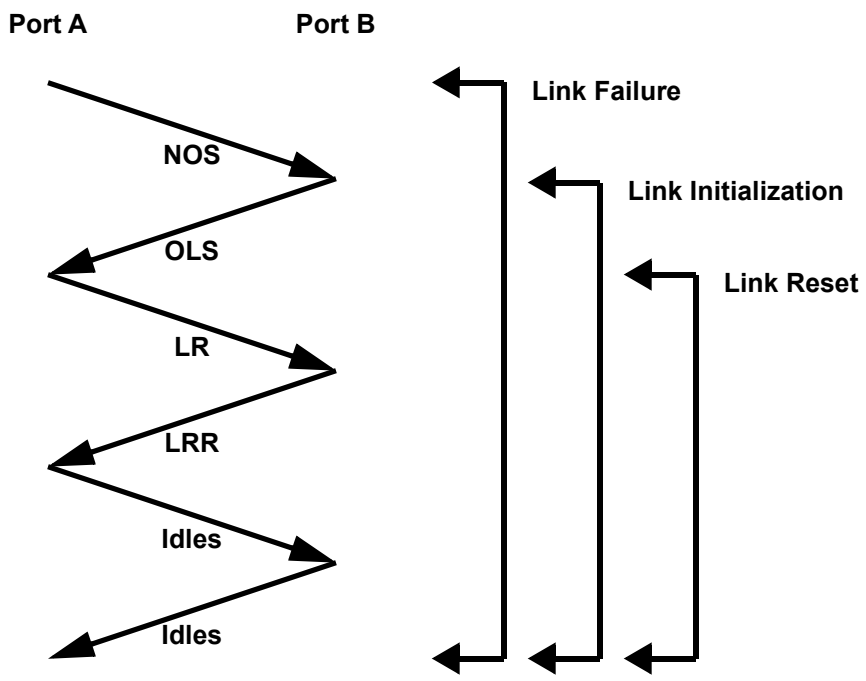

Figure 92 - Link Recovery hierarchy

22.4.7 Link Recovery - secondary effects

22.4.7.1 Class 2

When Primitive Sequences are transmitted or received, the Fx_Port may discard any Class 2 frames held in its buffers. While a PN_Port is transmitting a Primitive Sequence, it may discard any subsequent Class 2 frames received. Both the PN_Port and Fx_Port may begin transmitting frames after entering the Active State.

Active Sequences within an Exchange are not necessarily affected. Therefore, normal processing continues and Sequence recovery is performed as required.

22.4.7.2 Class 3

When Primitive Sequences are transmitted or received, the Fx_Port may discard any Class 3 frames held in its buffers. While a PN_Port is transmitting a Primitive Sequence, it may discard any subsequent Class 3 frame received. Both the PN_Port and Fx_Port may begin transmitting frames after entering the Active State.

Active Sequences within an Exchange are not necessarily affected. Therefore, normal processing continues and Sequence recovery is performed as required.

22.4.8 Link Error Status Block

The errors shown in table 108 are accumulated over time within a PN_Port. The format shown is the format in which the LESB information shall be supplied in response to an RLS ELS. It does not require any specific hardware or software implementation. The errors accumulated provide a coarse measure of the integrity of the link over time. No means are provided to reset a counter in the LESB; however, on overflow it shall be set to zero and then continue counting. The counts shall be 32 bit values.

Table 108 - Link Error Status Block format for RLS command

Bits Word	31 .. 00
0	Link Failure Count
1	Loss-of-Synchronization Count
2	Loss-of-Signal Count
3	Primitive Sequence Protocol Error
4	Invalid Transmission Word
5	Invalid CRC Count

NOTE 56 - Informative guidelines to manage the LESB are provided in annex F.

A PN_Port may choose to log these events as well as other errors that occur on a PN_Port specific basis in a manner not defined in this standard.

NOTE 57 - It is recommended that Fx_Ports also maintain an LESB and accumulate error events in a manner which is not defined in this standard.

22.4.9 FEC Status Block

The errors shown in table 109 are accumulated over time within an FC_Port if Forward Error Correction is active for the link. The format shown is the format in which the FEC counter information shall be supplied in response to an RDP ELS. The errors accumulated provide a coarse measure of the integrity of the link over time. No means are provided to reset a counter in the FEC Status Block, however, on overflow it shall be set to zero and then continue counting. The counts shall be 32 bit values.

Table 109 - FEC Status Block

Bits Word	31 .. 00
0	FEC Corrected Blocks Count
1	FEC Uncorrectable Blocks Count
2 - 3	Reserved

An FC_Port may choose to log these events as well as other errors that occur on an FC_Port specific basis in a manner not defined in this standard.

22.4.10 Bit-Error-Rate Thresholding

22.4.10.1 Introduction

The optional bit-error-rate thresholding process is designed to detect an increased error rate before performance degradation becomes serious. When the specified bit-error-rate threshold is reached, a Registered Link Incident Report (RLIR) ELS shall be generated as required by the RLIR ELS (see FC-LS-4).

The bit-error rate is measured during frame, Primitive Signal, and Primitive Sequence reception. The bit-error rate is not calculated during times when Transmission Word Synchronization has been lost, when in the Offline State, or when in a Link-Failure State. The terms used to define the bit-error-rate thresholding process are defined in the Set Bit-error Reporting Parameters (SBRP) ELS (see FC-LS-4).

22.4.10.2 Types of Link Errors Caused by Bit Errors

Bit errors are not detected directly, however they usually result in the recognition of invalid Transmission Words, Primitive Sequence protocol errors, CRC errors, or other events. If 8b/10b encoding is used, then only recognition of Invalid Transmission Words are counted toward the bit-error rate threshold. If 64b/66b encoding is used without FEC, then recognition of Invalid Transmission Words and CRC errors are counted toward the bit error rate threshold. If 64b/66b encoding is used with FEC, then recognition of Invalid Transmission Words and uncorrectable FEC Blocks (see 22.4.9) are counted toward the bit error rate threshold.

22.4.10.3 Error Intervals

A single error may result in several related errors occurring closely together that in turn may result in multiple counts. A character might have a single bit error in it that causes a code-violation error. A disparity error might occur on a following character, caused by the same single error. To prevent multiple error counts from a single cause, the following concept of an Error Interval is introduced:

a) an Error Interval is a time period during which one or more invalid Transmission Words are recognized. This time may be exceeded due to infrequent unusual conditions;
b) only the first error in an Error Interval is counted toward the Error Threshold; and
c) the default value for the Error Interval is 1.5 seconds with a tolerance of ± 10%.

22.4.10.4 Bit-Error-Rate-Thresholding Measurement

Measurement of bit-error-rate thresholding shall be accomplished by counting the number of Error Intervals that occur in an Error Window. When the Error Interval Count equals the Error Threshold, the threshold is exceeded and an RLIR shall be generated. A maximum of one RLIR ELS reporting bit error threshold exceeded shall be generated for each link during one Error Window. The default value for the Error Threshold is 15.

The default value for the Error Window is 300 seconds and the tolerance is + 1 Error Interval or - 0 Error Intervals.

The bit-error-counting process shall be restarted when Active State is entered and when a vendor-dependent amount of time has elapsed after the Error Threshold is exceeded. In addition, the bit-error-counting process may be restarted whenever the Error Window has expired even though an Error Threshold is not reached. The bit-error-counting process may also be reset and restarted when an initialization procedure occurs.

22.5 Exchange and Sequence errors

22.5.1 Scope

Exchange and Sequence error recovery are functions of the FC-2V sublevel.

22.5.2 Link timeout

A Link timeout error shall be detected if one or more R_RDY Primitive Signals are not received within E_D_TOV after BB_Credit_CNT has reached BB_Credit.

Recovery from Link timeout is accomplished by performing the Link Reset Protocol (see 7.8.3).

Link timeout values need to take Fabric characteristics into consideration. The concern is the maximum time required for frame delivery by the worst case route with any associated delays within the Fabric.

22.5.3 Sequence timeout

22.5.3.1 Introduction

The basic mechanism for detecting errors within a Sequence is the Sequence timeout. Other mechanisms that detect frame errors within a Sequence are performance enhancements in order to detect an error sooner than the timeout period. Since an active Sequence utilizes Nx_Port resources, Sequence timeout is applicable to both the discard policy and the process policy.

22.5.3.2 Class 2

Both the Sequence Initiator and the Sequence Recipient use a timer facility with a timeout period (E_D_TOV) between expected events. The expected event for the Sequence Initiator to Data frame transmission is an ACK response. The expected event for the Sequence Recipient is another Data frame for the same Sequence that is active and not complete. Other events (e.g., Link Credit Reset and ABTS-LS) shall also stop the Sequence timer. When a Sequence Recipient receives the last Data frame transmitted for the Sequence, it shall verify that all frames have been received before transmitting the final ACK (EOF_t) for the Sequence.

If the timeout period (E_D_TOV) expires for an expected event before the Sequence is complete, a Sequence timeout is detected. Timeouts are detectable by both the Sequence Initiator and the Sequence Recipient. If a Sequence Initiator detects a Sequence timeout, it shall transmit the ABTS frame to perform the Abort Sequence Protocol. If a timeout is detected by the Sequence Initiator before the last Data frame is transmitted, ABTS notifies the Sequence Recipient that an error was detected by the Sequence Initiator (see 22.5.5.2.2). Detection of a Sequence timeout by the Sequence Initiator may also result in aborting the Exchange (see 16.3.2.3).

If a Sequence Recipient detects a Sequence timeout, it shall set the Abort Sequence Condition (i.e., F_CTL bits 5-4) in an ACK to 01b to indicate a missing frame error condition. The Sequence Recipient shall also post the detected condition in the Exchange Status Block associated with the Sequence. A Sequence timeout results in either aborting the Sequence (see 16.3.2.2) by the Sequence Initiator, abnormal termination of a Sequence (see 22.5.5.2) by the Sequence Recipient, or aborting the Exchange by either the Sequence Initiator or Sequence Recipient (see 16.3.2.3).

In Class 2, if a Sequence has been aborted and the Sequence Recipient supplies the Recovery_Qualifier (i.e., OX_ID, RX_ID, and a SEQ_CNT range, low and high SEQ_CNT values), the Sequence Initiator shall not transmit any Data frames within that range within a timeout period of R_A_TOV. Both the Sequence Initiator and Sequence Recipient discard frames within that range. After R_A_TOV has expired, the Sequence Initiator shall reinstate the Recovery_Qualifier using a Reinstate Recovery Qualifier Link Service request.

22.5.3.3 Class 3

In Class 3, the expected event for the Recipient is another Data frame for the same Sequence. Other events (e.g., ABTS-LS) shall also stop the Sequence timer. When a Sequence Recipient receives the last Data frame transmitted for the Sequence, it shall verify that all frames have been received.

NOTE 58 - For environments that do not use a request/response protocol, the Sequence Initiator may periodically transmit an ABTS frame and the Sequence Recipient is able to inform the Sequence Initiator of the last deliverable Sequence. If the Sequence Initiator does not transmit ABTS frames, in Discard multiple Sequences Exchange Error Policy following an error in a Single Sequence, the Sequence Recipient may continue to abnormally terminate subsequent Sequences and not deliver them to the FC-4 or upper level due to the requirement of in-order delivery of Sequences in the order transmitted.

NOTE 59 - For environments that use a request/response protocol, ABTS should not be used to forward progress of a transmission. For bi-directional Exchanges, it is possible to infer proper Sequence delivery without the use of ABTS, if Sequence Initiative has been transferred and the reply Sequence for the same Exchange is received.

22.5.3.4 End-to-end Class 2 Credit loss

In Class 2 it is possible to have no available end-to-end Credit as a result of one or more Sequence timeouts. The LCR Link_Control frame shall be transmitted by the Sequence Initiator, that has no available end-to-end Credit, to the Sequence Recipient. The Sequence Initiator (indicated by the S_ID in the LCR frame) shall perform normal recovery for the Sequence that timed out (see 22.5.5).

The Fabric may return F_BSY if unable to deliver the LCR frame. A Reject may also be returned if either the S_ID or D_ID is invalid or an invalid delimiter is used.

When an Nx_Port receives a LCR, it shall discard the Data in its buffers associated with the S_ID of the LCR frame and abnormally terminate the Sequences associated with any discarded frames.

22.5.4 Exchange Integrity

22.5.4.1 Applicability

Since Class 3 does not use ACK or Link_Response frames, Sequence integrity is verified at the Sequence Recipient on a Sequence by Sequence basis. In Class 3, only the Recipient is aware of a missing frame condition and communication of that information to the Initiator is the responsibility of the FC-4 or upper level.

The remaining discussion concentrates on Class 2. Items applicable to Class 3 shall be specified explicitly.

22.5.4.2 Exchange management

An Exchange is managed according to the rules specified in 19.4.1. When an Exchange is originated, the Originator specifies the Exchange Error Policy for the duration of the Exchange. Delivery of Data within a Sequence from the Originator to the Responder or from the Responder to the Originator shall be in the same order as transmitted. The discarding of Sequences, the delivery order of Sequences, and the recovery of Sequences varies based on the Exchange Error Policy identified by the Originator Abort Sequence Condition bits (i.e., F_CTL bits 5-4). (see 12.7.10)

22.5.4.3 Exchange Error Policies

22.5.4.3.1 Introduction

There are two fundamental Exchange Error Policies, the discard policy and the process policy. Discard policy means that a Sequence is delivered in its entirety or it is not delivered at all. There are two variations of discard policy that relate to the deliverability of ordered Sequences. Process policy allows an incomplete Sequence to be deliverable. Process policy allows the Data portion of invalid frames to be delivered if the Sequence Recipient has reason to believe that it is part of the proper Exchange. See 19.4.10 for rules that discuss detailed requirements for each type of Exchange Error Policy.

22.5.4.3.2 Discard multiple Sequences

The Discard multiple Sequences Error Policy requires that for a Sequence to be deliverable, it shall be complete (all Data frames received and accounted for) and any previous Sequences, if any, for the same Exchange from the Sequence Initiator are also deliverable. This policy is useful if the ordering of Sequence delivery (i.e., Sequence A followed by Sequence D, followed by Sequence T, and so forth) is important to the FC-4 or upper level. Sequences shall be delivered to the FC-4 or upper level on a Sequence basis in the same order as transmitted.

22.5.4.3.3 Discard a single Sequence

The Discard a single Sequence Error Policy requires that for a Sequence to be deliverable, it shall be complete (i.e., all Data frames received and accounted for). There shall be no requirement on the deliverability of previous Sequences for the Exchange. This policy is useful if the Payload of the Sequences delivered contains sufficient FC-4 or upper level information to process the Sequence independently of other Sequences within the Exchange. Sequences shall be delivered to the FC-4 or upper level on a Sequence basis in the same order as received.

22.5.4.3.4 Process with infinite buffering

The Process with infinite buffering Error Policy does not require that a Sequence be complete or that any previous Sequences be deliverable. Process policy allows an Nx_Port to utilize the Data_Field of invalid frames under certain restrictive conditions (see 11.3.9.2 and 11.3.9.3). The Process with infinite buffering Error Policy is intended for applications (e.g., a video frame buffer) in which loss of a single frame has minimal effect or no effect on the Sequence being delivered. Frames shall be delivered to the FC-4 or upper level in the same order as received.

Process with infinite buffering Error Policy shall not be requested in classes of service other than Class 3.

22.5.4.4 Sequence integrity

Sequence management and integrity involves:

a) proper initiation of Sequences (see 19.4.4);
b) proper control of the ordering of Sequences (SEQ_ID usage) with continuously increasing SEQ_CNT (see 19.4.6);
c) proper control of Data frames by SEQ_CNT within single Sequence (see 19.4.6); and
d) proper completion of a Sequence (see 19.4.8).

Frame identification (see 19.2.2) and Sequence identification (see 19.7.1) provide the appropriate uniqueness to ensure the integrity of the Data delivered. A Sequence Recipient shall not reassemble and deliver the Data frames of a single Sequence unless all of the Data frames adhere to the Sequence management rules specified in 19.4.5.

22.5.4.5 Sequence error detection

Sequence errors are detected in three ways:

a) detection of a missing frame (see 19.4.10 and 19.4.11);
b) detection of a Sequence timeout (see 22.5.3); and
c) detection of rejectable condition within a frame (see 15.3.3.4).

Detection of Sequence errors by the Recipient is conveyed in the Abort Sequence Condition bits (i.e., F_CTL 5-4) in an ACK frame or by a P_RJT frame (except Class 3). Otherwise, either the Sequence Initiator or Sequence Recipient or both detect a Sequence timeout.

Exchange and Sequence status are tracked in the Exchange Status Block (see 19.9.1 and 19.4.14) and the Sequence Status Block (see 19.9.2 and 19.4.12), respectively.

22.5.4.6 X_ID processing

During certain periods in an Exchange, one or both X_ID fields may be unassigned. If an X_ID is unassigned, special error recovery for both the Sequence Initiator and the Sequence Recipient may be required that is beyond the scope of this standard.

22.5.5 Sequence recovery

22.5.5.1 Introduction

Sequence recovery is under control of the individual FC-4 or upper level as well as options within a specific implementation. Such control may be exercised in the form of guidance, authorization to automatically perform recovery, a requirement to inform the upper level prior to recovery, or no Sequence recovery within the Exchange encountering a Sequence error. This standard specifies procedures to terminate or abort a Sequence, recover end-to-end Credit, handle missing or delayed frames, and synchronize both Nx_Ports with respect to Sequence and Exchange status. This standard does not require Sequence retransmission within the same Exchange in which a Sequence error is detected.

22.5.5.2 Abnormal Sequence termination

22.5.5.2.1 Introduction

There are multiple methods by which a Sequence may complete abnormally and one method by which a Sequence completes but is only partially received by the Sequence Recipient. When a Sequence completes abnormally, it shall not be delivered to the FC-4 or upper level. The rules for normal Sequence completion are specified in 19.4.8. The methods by which a Sequence completes abnormally include:

a) the Sequence Initiator aborts the Sequence with an ABTS frame utilizing the Abort Sequence Protocol. At the time the ABTS frame is received, one or more Sequences are incomplete;
b) if the Exchange of which a Sequence is a member is abnormally terminated, each open Sequence shall also be abnormally completed (see 19.4.13); and
c) Logout (see FC-LS-4).

A Sequence may complete normally with only a part of the Sequence being received by the Sequence Recipient in the Stop Sequence Protocol.

22.5.5.2.2 Abort Sequence Protocol

22.5.5.2.2.1 General Case

The Sequence Initiator shall begin the Abort Sequence Protocol (i.e., ABTS Protocol) by transmitting the ABTS Basic Link Services frame. The SEQ_ID shall match the SEQ_ID of the last Sequence transmitted even if the last Data frame has been transmitted. The ABTS frame may be transmitted without regard to whether transfer of Sequence Initiative has already been attempted or completed. The SEQ_CNT of the ABTS frame shall be one greater than the SEQ_CNT of the last frame transmitted for this Exchange by the Sequence Initiator of the ABTS frame.

The Sequence Recipient shall accept an ABTS frame even if the Sequence Initiative has been previously transferred. The Recipient determines the last deliverable Sequence as the Recipient for this Exchange and it includes that SEQ_ID in the BA_ACC Payload along with a valid indication (see table 82). The Payload of the BA_ACC also includes the current OX_ID and RX_ID for the Exchange in progress. Low and high SEQ_CNT values are also returned. The low SEQ_CNT value is equal to the SEQ_CNT of the last Data frame (i.e., End_Sequence = 1) of the last deliverable Sequence. If there was no deliverable Sequence, the low value is zero.

The high SEQ_CNT value shall match the SEQ_CNT of the ABTS frame. The combination of OX_ID, RX_ID, low SEQ_CNT and high SEQ_CNT defines the range of a Recovery_Qualifier. This range indicates a range of Data frames that were not and shall never be delivered to the FC-4 or upper level in the Discard multiple Sequences Error Policy. In the Discard a single Sequence Error Policy, the Recovery_Qualifier may contain Sequences that have been delivered.

If the ABTS frame is transmitted in Class 2 or Class 3, the Recovery_Qualifier shall be timed out by the Sequence Initiator of the ABTS frame for a timeout period of R_A_TOV. After the R_A_TOV timeout has expired, the Sequence Initiator of the ABTS frame shall issue a Reinstate Recovery Qualifier Link Service request in order to purge the Recovery_Qualifier. Timing out the Recovery_Qualifier for R_A_TOV allows both Nx_Ports to discard frames received in the range of the Recovery_Qualifier. This ensures the Data integrity of the Exchange.

Transmission of BA_ACC by the Sequence Recipient is a synchronizing, atomic event. The Sequence Recipient shall discard any frames received within the range of the Recovery_Qualifier, if timeout is required, the instant that the BA_ACC is transmitted and thereafter, until it receives a Reinstate Recovery Qualifier (RRQ) ELSs request. The Sequence Initiative F_CTL bit setting in the BA_ACC shall indicate whether the Sequence Initiative is held or transferred to the Sequence Initiator of the ABTS frame. If the Sequence Recipient of the ABTS frame holds Sequence Initiative, it shall withhold Sequence Initiative transfer until the ACK to the BA_ACC is received.

In like manner, after the Sequence Initiator has received the BA_ACC to the ABTS frame, it shall discard any frames received within the range of the Recovery_Qualifier. The Sequence Initiator shall retire the SEQ_CNT range within the Recovery Qualifier until R_A_TOV has expired, or it shall abort the Exchange (the Recovery_Qualifier for the Exchange times out R_A_TOV).

When the Sequence Initiator has received the BA_ACC, it may reclaim any outstanding end-to-end Credit for all unacknowledged Data frames within the SEQ_CNT range of the Recovery_Qualifier. After the Sequence Initiator of the ABTS frame has received the BA_ACC with Sequence Initiative transferred to the Initiator, it may retransmit the Sequences that it determines as non-deliverable by the Sequence Recipient (see 19.4.8 and 19.4.11).

If a Recovery_Qualifier exists and is being timed out (R_A_TOV) and another Sequence error occurs that would cause transmission of the ABTS frame, the Exchange shall be aborted using ABTS-LS. However, if the Reinstate Recovery Qualifier request has been completed such that the Recovery_Qualifier has been purged, the ABTS Protocol may be utilized and a new Recovery_Qualifier may be established.

22.5.5.2.2.2 Special case - new Exchange

If a Sequence Initiator of the ABTS frame attempts to originate a new Exchange and a Sequence timeout occurs, the Sequence Initiator shall transmit the ABTS frame as in the ABTS protocol defined. If the Sequence Recipient receives an ABTS frame for an Exchange that is unknown, it shall open an Exchange Status Block, with OX_ID = value of ABTS, RX_ID = FF FFh, and post the SEQ_ID of the ABTS frame. The BA_ACC Payload shall indicate invalid SEQ_ID, a low SEQ_CNT set to zero, and a high SEQ_CNT set to SEQ_CNT of the ABTS frame.

The Sequence Initiator of the ABTS frame shall timeout the Recovery_Qualifier, if required, and transmit the Reinstate Recovery Qualifier in the normal manner.

22.5.5.2.3 Recipient abnormal termination

If no Data frames are being received for a Sequence in error, the Sequence Recipient shall timeout the Sequence and abnormally terminate the Sequence by setting status in the Sequence Status Block to indicate Sequence timed-out by Recipient, update the Sequence status in the Exchange Status Block, and release link facilities associated with the Sequence. If an ABTS frame for the abnormally terminated Sequence is received, the Abort Sequence Protocol shall be performed and completed.

The Sequence Recipient may timeout the Exchange in a system dependent manner and timeout period.

22.5.5.2.4 End_Sequence

If the last Data frame of a Sequence has been transmitted with the Last_Sequence bit set and the Sequence Initiator detects a Sequence timeout, the Initiator may initiate an Exchange with a REC ELS request to determine Exchange status. If the Initiator is in the process of timing out a Sequence for a missing EOF_t with Sequence Initiative transferred and it receives a new Sequence initiated by the Recipient (new Initiator), it shall assume that the previous Sequence ended successfully. In order to make such an assumption, the N_Port_ID, OX_ID, and RX_ID shall be the same for the new Sequence as the Sequence that transferred Sequence Initiative.

From a Recipient view, if the last Data frame is lost, the Recipient abnormally terminates the Sequence when a Sequence timeout is detected.

22.5.5.3 Stop Sequence Protocol

The Stop Sequence Protocol shall be used by a Sequence Recipient to terminate a Sequence without invoking a drastic recovery protocol. To cause a Sequence to be terminated by the Initiator, the Sequence Recipient shall set the Abort Sequence Condition bits in F_CTL to a 10b value in the ACK to each Data frame received after the Recipient recognizes the need to terminate the Sequence. When the Sequence Initiator receives the first ACK with the Stop Sequence Condition indicated, it shall terminate the Sequence by transmitting a Data frame of the Sequence with End_Sequence = 1. If the Sequence Initiator has already transmitted the last Data frame of the Sequence, no further action is required of it except that which may be required by the FC-4 or upper level.

Once the Sequence Recipient has indicated the Stop Sequence condition, it shall not report Sequence errors related to Data frames with a SEQ_CNT greater than that of the Data frame at which the Stop Sequence condition was recognized. However, it shall observe the normal Sequence timeout protocols before transmitting the ACK to the frame with the End_Sequence bit set and shall recover Credit in the normal manner.

NOTE 60 - When the Sequence Initiator stops the Sequence, or if it sent the last Data frame before receiving the Stop-Sequence indication, it may either hold or pass Sequence Initiative as determined by the Upper Level Protocol. It is the responsibility of the Upper Level Protocol to define the protocol for indicating to the Sequence Initiator why the Sequence was stopped, if such an indication is needed, and the protocol for transferring Sequence Initiative if needed.

NOTE 61 - A common use of this protocol is to signal that there is no more room in the Upper Level Protocol buffer for the Data being received. To terminate the Sequence when the Upper Level Protocol buffer is exhausted, the Sequence Recipient stores as much data as possible from the first frame whose Payload is not completely stored and indicates the Stop Sequence condition in the Abort Sequence Condition bits in F_CTL in the ACK to that Data frame and in each subsequent ACK until the end of the Sequence. When the Sequence ends, the ULP protocol may send a message from the Sequence

Recipient to the Initiator that includes the count of the number of bytes in the Sequence that were stored before the ULP buffer was exhausted.

22.5.5.4 End-to-end Credit loss

This standard does not define the method to be employed for Credit allocation to a destination Nx_Port. If destination end-to-end Credit is allocated on a Sequence basis, then that portion of end-to-end Credit is reclaimed when the Sequence is aborted or abnormally terminated. When a Sequence is aborted, any end-to-end Credit for outstanding ACK frames associated with that Sequence may be reclaimed. This applies only to Class 2.

22.6 Integrated error detection / actions

22.6.1 Errors detected

Table 110 lists 10 categories of errors that are detectable. The categories specified relate directly to link integrity or data integrity as previously discussed. This list is representative of the types of errors that may be detected. It is not an exhaustive list. Column 1 of table 110 specifies a general error category. Column 2 identifies specific errors within that general category. Column 3 identifies the action that the Sequence Initiator takes on ACK frame errors detected for Sequences being transmitted or link integrity errors (ACK frame reception is only applicable to Class 2). Column 4 identifies the action that the Sequence Recipient takes on Data frame errors detected for the Sequences being received or link integrity errors.

Table 110 - Detailed errors and actions (part 1 of 2)

Error Category	Specific Error	Seq Init Action	Seq Recp Action
Link Failure	Loss-of-Signal	22.6.2.12	22.6.2.12
	Loss of Sync> timeout period	22.6.2.12	22.6.2.12
Link Errors	Invalid Transmission Word during frame reception	22.6.2.1, 22.6.2.11	22.6.2.1, 22.6.2.11
	Invalid Transmission Word outside of frame reception	22.6.2.11	22.6.2.11
	Loss of Sync	22.6.2.11	22.6.2.11
Link Timeout	Missing R_RDYs (no buffer-to-buffer Credit is available)	22.6.2.6	22.6.2.6
Link Reset protocol timeout	missing LRR response to LR transmission	22.6.2.12	22.6.2.12
	missing Idle response to LRR transmission	22.6.2.12	22.6.2.12
Sequence timeout	timeout during Sequence	22.6.2.8, 22.6.2.10	22.6.2.9
	timeout at end of Sequence	22.6.2.8, 22.6.2.10	22.6.2.9
Delimiter Errors	Class not supported	22.6.2.2	22.6.2.2
	Abnormal frame termination	22.6.2.1	22.6.2.1
	EOFa received	22.6.2.1	22.6.2.1
	Incorrect SOF or EOF (see tables 66 and 68)	22.6.2.1	22.6.2.1

Table 110 - Detailed errors and actions (part 2 of 2)

Error Category	Specific Error	Seq Init Action	Seq Recp Action
Address Identifier errors	incorrect D_ID	22.6.2.2	22.6.2.2
	incorrect S_ID	22.6.2.2	22.6.2.2
Frame_Content errors	CRC	22.6.2.1	22.6.2.1
	Busy frame received	22.6.2.5	22.6.2.5
	Reject frame received	22.6.2.3	22.6.2.3
	TYPE not supported	22.6.2.2	22.6.2.2
	Invalid Link_Control	22.6.2.2	22.6.2.2
	Invalid R_CTL	22.6.2.2	22.6.2.2
	Invalid F_CTL	22.6.2.2	22.6.2.2
	Invalid OX_ID	22.6.2.2	22.6.2.2
	Invalid RX_ID	22.6.2.2	22.6.2.2
	Invalid SEQ_ID	22.6.2.2	22.6.2.2
	Invalid SEQ_CNT	22.6.2.2	22.6.2.2
	Invalid DF_CTL	22.6.2.2	22.6.2.2
	Exchange Error	22.6.2.2	22.6.2.2
	Protocol Error	22.6.2.2	22.6.2.2
	Incorrect length	22.6.2.2	22.6.2.2
	Unexpected Link_Continue	22.6.2.2	22.6.2.2
	Unexpected Link_Response	22.6.2.2	22.6.2.2
	Login Required	22.6.2.2	22.6.2.2
	Excessive Sequences attempted	22.6.2.2	22.6.2.2
	Unable to Establish Exchange	22.6.2.2	22.6.2.2
	Relative offset out of bounds	N/A	22.6.2.2
Data frame errors	buffer not available - Class 2	N/A	22.6.2.4
	buffer not available - Class 3	N/A	22.6.2.1
	ABTS frame received	N/A	22.6.2.8
	missing frame error detection	N/A	22.6.2.13, 22.6.2.7
ACK_1 frame errors	ABTS frame received	22.6.2.8, 22.6.2.10	N/A
	missing frame error detection	22.6.2.13, 22.6.2.8	N/A

22.6.2 Actions by Initiator or Recipient

22.6.2.1 Discard frame

In both the discard policy and the process policy, a frame that is terminated with an EOF_a shall be discarded:

a) Discard policy - If an invalid frame is detected, the entire invalid frame shall be discarded. If a valid frame is received and a rejectable or busy condition in Class 3 is detected, the entire frame shall be discarded; and
b) Process policy - If an Nx_Port is able to determine that an invalid frame is associated with an Exchange which is designated as operating under Process policy, the Nx_Port may process and use the Data_Field at its discretion, otherwise, the entire invalid frame shall be discarded.

22.6.2.2 Transmit P_RJT frame

If a valid Data frame (see 11.3.9.2) is received that contains information in the Frame_Header that is invalid or incorrect, then:

a) in Class 2, a P_RJT frame shall be transmitted with the appropriate reason code as specified in 15.3.3.4. Reason codes are defined such that the first error detected is returned as the reason code; and
b) in any class of service, the received frame shall be discarded and R_RDY shall be transmitted in response to the discarded frame.

22.6.2.3 Process Reject

When a P_RJT or F_RJT frame is received in response to a frame transmission, the reject information shall be passed to the appropriate Upper Level Protocol in order to process. Certain errors are recoverable by taking an appropriate action (e.g., Login). The Sequence shall be aborted using the Abort Sequence Protocol, regardless of possible recovery actions. For typical non-retryable errors the Exchange shall also be aborted.

If a P_RJT or F_RJT frame is received that contains information in the Frame_Header that is invalid or incorrect, the frame shall be discarded.

22.6.2.4 Transmit P_BSY frame

An Nx_Port shall track the status of its buffers such that if a Class 2 Data frame is received and no end-to-end flow control buffer is available, a P_BSY shall be returned to the transmitter of the frame. If a Class 2 Data frame is received and no buffer is available, the Recipient may discard the frame without issuing a P_BSY or P_RJT. Portions of the frame other than the Frame_Header are discarded. The Frame_Header is captured in order to generate a proper P_BSY Link_Response frame.

An R_RDY is transmitted in response to a Class 2 frame regardless of the disposition of the received frame.

22.6.2.5 Process Busy

When an F_BSY or P_BSY is received in response to a Class 2 Data frame, and if the Nx_Port has the capability to retransmit, the Nx_Port shall retransmit the Class 2 Data frame within E_D_TOV of the last Data frame transmission. In order to avoid reissuing a frame for an extended number of retries an Nx_Port may choose to count the number of retries and decide to shutdown communication with a specific Nx_Port.

When an F_BSY is received in response to an ACK frame (Class 2), the Nx_Port shall not retransmit the ACK frame.

22.6.2.6 Perform Link Reset Protocol

When a PN_Port has no buffer-to-buffer Credit available and has exceeded the Link timeout period (E_D_TOV), a Link timeout is detected. When a Link timeout is detected, the PN_Port or Fx_Port begins the Link Reset Protocol.

22.6.2.7 Set Abort Sequence Bits

When a Sequence Recipient detects a Sequence error by missing frame detection or other internal processing errors, the Recipient sets the appropriate Abort Sequence in F_CTL bits 5-4 to:

a) 00b = Continue Sequence;
b) 01b = Abort, perform ABTS; or
c) 10b = Stop Sequence.

The SEQ_CNT of the first missing frame is saved in the Sequence Status Block. Only the first error is saved in the Sequence Status Block. This information shall not be required by the Sequence Initiator for recovery purposes.

22.6.2.8 Perform Abort Sequence Protocol

When a Sequence Initiator detects a Sequence error or receives an appropriate Abort Sequence Condition (01b) in F_CTL bits 5-4 in an ACK for an active Sequence, the Initiator shall transmit an Abort Sequence Link Service request to the Recipient and transfers Sequence Initiative in order to complete Abort Sequence processing (see 22.5.5.2).

When a Sequence Recipient receives an ABTS frame, it shall respond as specified in 22.5.5.2.2 and 16.3.2.

22.6.2.9 Abnormally terminate Sequence

When a Sequence Recipient detects a Sequence timeout (E_D_TOV) and no Data frames are being received for the Sequence, the Recipient shall terminate the Sequence and update the Exchange Status Block.

22.6.2.10 Retry Sequence

When a Sequence has been abnormally terminated, the Sequence Initiator may retransmit the Sequence under guidance, authorization, or control of the FC-4 or upper level.

22.6.2.11 Update LESB

The Link Error Status Block is updated to track errors not directly related to an Exchange.

22.6.2.12 Perform Link Failure Protocol

Transmission or reception of the not operational Primitive Sequence initiates the Link Failure Protocol.

22.6.2.13 Error Policy processing

When an error is detected within a Sequence, the Sequence is either processed normally (process policy), or discarded (discard policy). See 22.5.4.3 for additional information.

23 Broadcast

23.1 Scope

Broadcast is a function of the FC-2M sublevel.

23.2 Applicability

Broadcast provides a service based on Fabric routing of Class 3 frames.

Broadcast operations are not applicable to Class 2.

23.3 Broadcast operation

A frame addressed to the Well-known address for Broadcast (i.e., FF FF FFh) is a Broadcast frame. The Fabric shall attempt to send the Broadcast frame to all possible Nx_Ports within zoning constraints. However, the Fabric may not be able to deliver to all Nx_Ports for any number of reasons (e.g., class mismatch or Nx_Port not operational).

An Nx_Port may discard a Broadcast frame.

An Nx_Port shall send and receive Class 3 Broadcast Data frames in the context of an implicit Broadcast Port Login. The implicit Broadcast Port Login is particular because it is not tied to any remote N_Port_Name and Node_Name, but it is tied to the destination address identifier FF FF FFh.

The implicit Broadcast Port Login specifies the service parameters to be used for broadcast communications. An FC-4 using the Broadcast functionality may specify the service parameters that it requires in the implicit Broadcast Port Login. In absence of such a specification, the default Login parameters specified in FC-LS-4 shall be used.

23.4 Other

Other forms of broadcast and multicast are available in topology specific configurations. For examples see FC-AL-2 for a description of Selective Replicate to perform dynamic multicasting.

24 Clock synchronization service

24.1 Scope

ELS Command service (see 24.3) is a function of the FC-3 level. Primitive Signal service (see 24.4) is a function of the FC-2P sublevel.

24.2 Introduction

24.2.1 References

See Informative annex G for implementation details related to Clock Synchronization.

24.2.2 Applicability

Conventional network technologies utilize clock distribution protocols (e.g., Network Time Protocol) that synchronize the computer's time-of-day clock. Such protocols typically provide clock synchronization accuracies on the order of a few milliseconds with highly tuned versions producing accuracies on the order of 50 microseconds.

The protocols defined in this clause allow clocks located within nodes to be readily synchronized to microsecond accuracies. If all sources of error are accounted for, higher accuracies are possible.

24.2.3 Function

Clock Synchronization over Fibre Channel is attained through a Clock Synchronization Server that contains a reference clock. The Server synchronizes Client's clocks to the reference clock on a periodic basis using either Primitive Signals or ELS frames. The Server may be built into a Fabric or it may be implemented as an independent node that services one or more Nx_Ports in either a Fabric or an Arbitrated Loop topology.

When all the Clients are synchronized with the Server, they shall be synchronized with each other. By tagging data with the current value of their synchronized clock, one client may accurately exchange time sensitive data with another client.

24.2.4 Assumptions

A simplifying assumption in both the ELS and Primitive methods is that propagation delays over the medium are insignificant. This eliminates the need for the Server to calculate and maintain the media delay to each Client.

Very accurate clock synchronization is accomplished without the use of media propagation delays through the techniques described in this clause. If the system requires even greater accuracy, "canned" propagation delays could be added in the Client's software or hardware. This and other sources of error are discussed in annex G.

24.2.5 Clock Synchronization Quality of Service

Certain performance (Quality of Service) parameters are made available to the Clients by the Clock Synchronization Server and the Fabric. This information is made available via FLOGI/PLOGI and/or the Clock Synchronization Request (CSR) ELS Command. The Quality of Service parameters include the accuracy of the Clock Count value, the implemented MSB and LSB, and the update period. These parameters are described in FC-LS-4.

24.3 ELS Command Service

24.3.1 Scope

ELS Command Clock Synchronization Service is a function of the FC-3 level.

24.3.2 ELS Commands

The format for the Clock Synchronization Request (CSR) and Clock Synchronization Update (CSU) commands are defined in FC-LS-4.

24.3.3 Fabric Topology

24.3.3.1 Model

The basic Model of the ELS method in a Fabric is shown in figure 93.

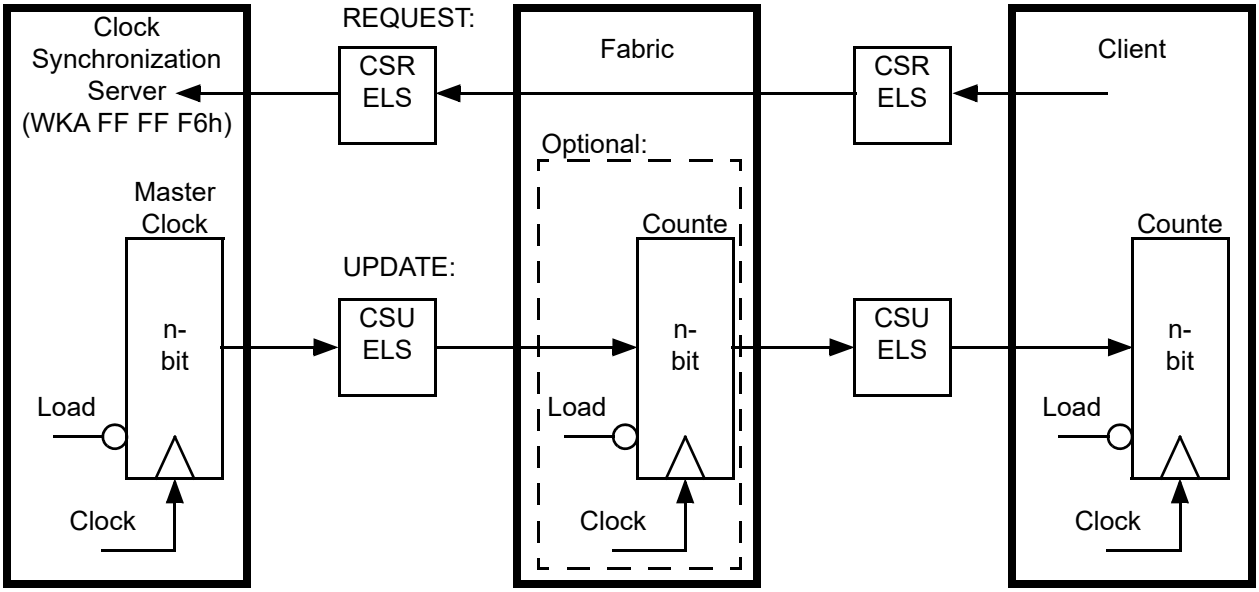

Figure 93 - ELS Clock Sync model – Fabric

24.3.3.2 Clock Synchronization Server Rules

The Clock Synchronization Server (FF FF F6h) shall have an n-bit binary counter. This counter shall act as the Master Clock to the Clients.

The Server shall periodically issue the Clock Synchronization Update (CSU) ELS command to the Clients. When a CSU command is sent, the Server shall place the current value of the Master Clock in the Payload.

The Server shall support at least one method for providing its Clock Synchronization Quality of Service capabilities to Clients. The available methods are N_Port Login and the Clock Synchronization Request (CSR) ELS command. The Server shall provide Clock Synchronization to Clients with the Quality of Service indicated in the N_Port Login LS_ACC Payload or the CSR ELS LS_ACC Payload.

The Clock Synchronization ELS Capable bit in the Initiator Control section of the Nx_Port Class Service Parameters shall be used to indicate whether the Server is capable of providing Clock Synchronization to Clients.

24.3.3.3 Fabric Rules

When a CSU is received from the Server, the Fabric shall transmit the clock value contained in the Payload to the D_ID specified in the header.

The Fabric shall support at least one method for providing its Clock Synchronization Quality of Service capabilities to Clients. The available methods are Fabric Login and the Clock Synchronization Request (CSR) ELS command. The Fabric shall provide Clock Synchronization to Clients with the Quality of Service indicated in the Fabric Login LS_ACC Payload or the CSR ELS LS_ACC Payload.

The Clock Synchronization ELS Capable bit in the Recipient Control section of the Fabric Class Service Parameters shall be used to indicate whether the Fabric is capable of transferring CSU ELS frames from the Server to the Clients.

24.3.3.4 Fabric Options

A Fabric may have its own n-bit binary counter as shown in figure 93. If this is done, the Fabric shall load its counter with the value in the Payload of the incoming CSU command, regardless of the content of the D_ID field of the header. The Fabric shall then place the current value of its counter in the Payload of the outgoing CSU command and update the CRC value. All other elements of the outgoing CSU frame shall be the same as in the incoming CSU frame.

24.3.3.5 Client Rules

A Client shall have an n-bit binary counter.

When a CSU is received, the Client shall load its counter with the incoming value in the Payload of the CSU command.

The Clock Synchronization ELS Capable bit in the Recipient Control section of the Class Service Parameters shall be used to indicate whether the Client is capable of receiving CSU ELS frames.

24.3.3.6 Client Options

Clients have the option of requesting particular Quality of Service parameters to the Server and the Fabric via Login or the CSR ELS command. However, the Server and Fabric may or may not be able to provide the Quality of Service requested.

24.3.4 Loop Topology

24.3.4.1 Model

The basic Model of the ELS method in a Loop is shown in figure 94.

24.3.4.2 L_Port Server Rules

The Clock Synchronization Server shall have an n-bit binary counter. This counter shall act as the Master Clock to the Clients.

The Server shall periodically issue the Clock Synchronization Update (CSU) ELS command to the Clients. When a CSU command is sent, the Server shall place the current value of the Master Clock in the Payload.

The Server shall support at least one method for providing its Clock Synchronization Quality of Service capabilities to Clients. The available methods are N_Port Login and the Clock Synchronization Request (CSR) ELS command. The Server shall provide Clock Synchronization to Clients with the Quality of Service indicated in the N_Port Login LS_ACC Payload or the CSR ELS LS_ACC Payload.

The Clock Synchronization ELS Capable bit in the Initiator Control section of the PLOGI Class Service Parameters shall be used to indicate whether the Server is capable of providing Clock Synchronization to Clients.

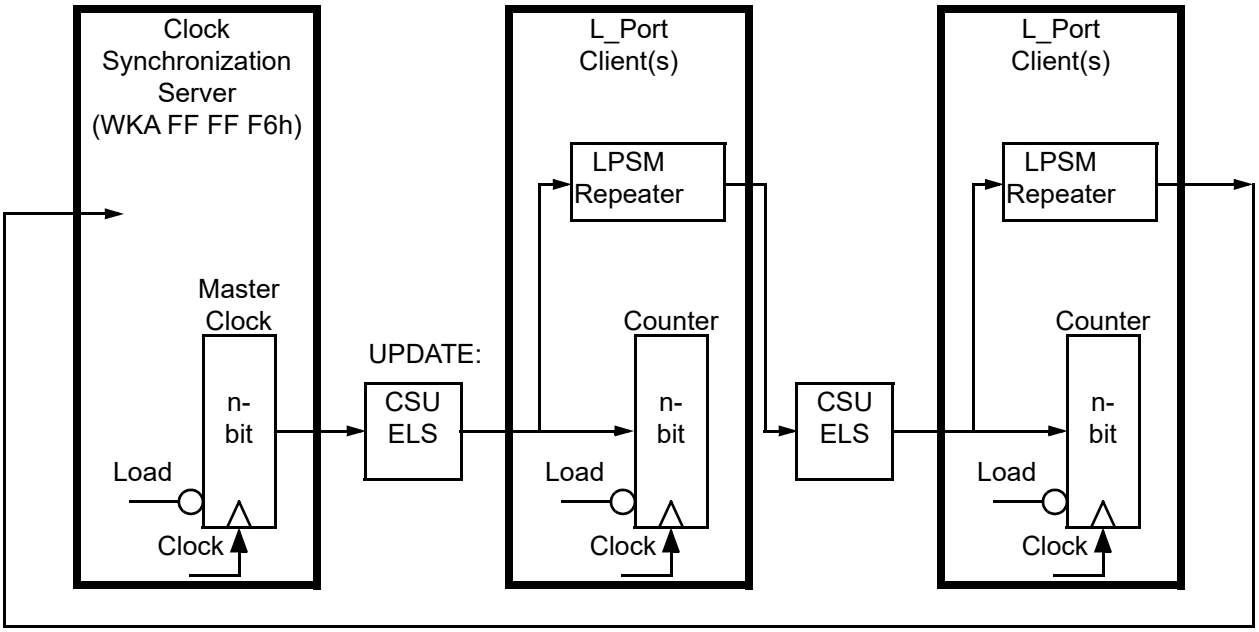

Figure 94 - ELS Clock Sync model – loop

24.3.4.3 L_Port Server Options

Depending on the implementation, the Server may receive the Clock Synchronization Request (CSR) ELS command from Clients to initiate Clock Sync Service. The format of the CSR command is defined in FC-LS-4. When the Server accepts the CSR command, it shall notify the Client that Clock Sync Service is enabled.

Although N_Port or Fabric Login is not required to use the CSR or CSU commands, if Login is used the Clock Sync Capable bit in the Class Specific Login Service Parameters shall be used to indicate whether the server is capable of supporting Clock Synchronization.

24.3.4.4 L_Port Client Rules

A Client shall have an n-bit binary counter.

When a CSU is received, the Client shall load its counter with the incoming value in the Payload of the CSU command.

The Clock Synchronization ELS Capable bit in the Recipient Control section of the PLOGI Class Service Parameters shall be used to indicate whether the Client is capable of receiving CSU ELS frames.

24.3.4.5 Client Options

Clients have the option of requesting particular Quality of Service parameters to the Server via Login or the CSR ELS command. However, the Server may or may not be able to provide the Quality of Service requested.

24.4 Primitive Signal Service

24.4.1 Scope

Primitive Signal Clock Synchronization Service is a function of the FC-2P sublevel.

This standard does not specify Primitive Signal Clock Synchronization Service for FC_Ports using 64B/66B transmission code.

24.4.2 Introduction

Primitive Signal Service for Clock Synchronization is compatible with all topologies, point-to-point, Arbitrated Loop, and Fabric based networks.

24.4.3 Communication Model

Figure 95 illustrates the protocol for synchronizing client's real-time clocks with a clock synchronization server real-time clock. To accomplish this the server periodically generates a synchronization event. The synchronization event is the transfer of clock synchronization primitives from the server to the Clients with the period between synchronization events controlled by the Server. Embedded within the clock synchronization primitives is the necessary data to update the client's real-time clock. For the client to receive an accurate real-time clock update in a Fabric based network the Fabric shall, to the degree required by the application(s) of interest, compensate for the delay of moving the real-time clock value from the server to the clients.

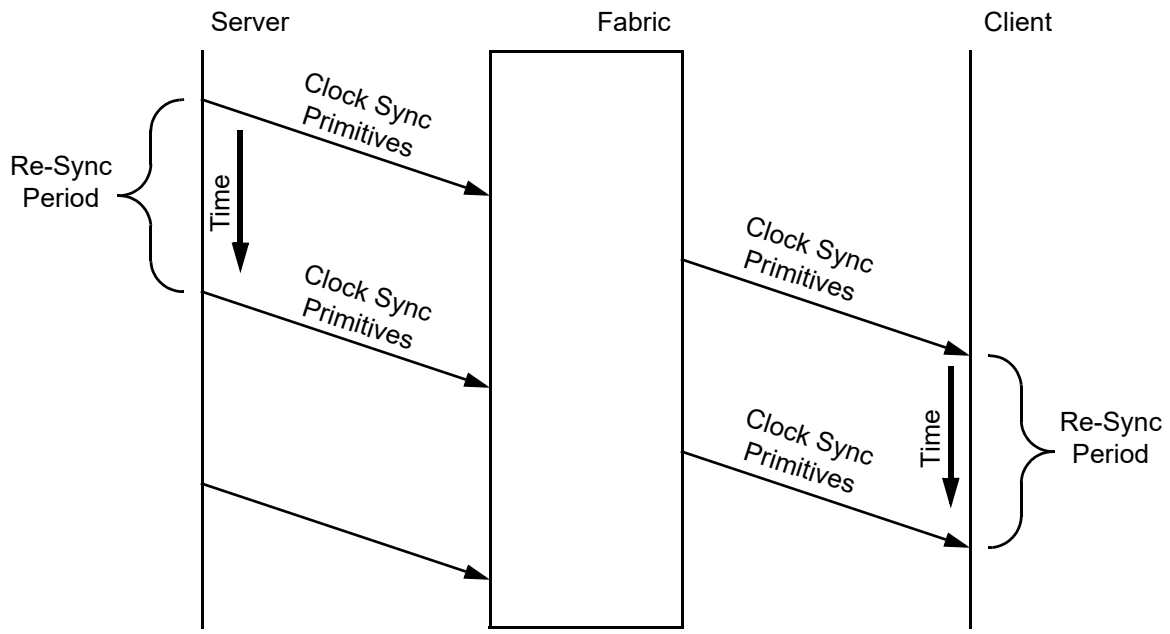

Figure 95 - Clock Synchronization data distribution

24.4.4 Requirements

24.4.4.1 Introduction

The Clock Synchronization Server shall initiate clock synchronization events by substituting three synchronization primitives for a sequence of three consecutive Fill Words in the inter-frame interval, as shown in figure 96. This shall be done in such a way as to ensure that the synchronization symbols are bracketed at both ends by at least two Fill Words.

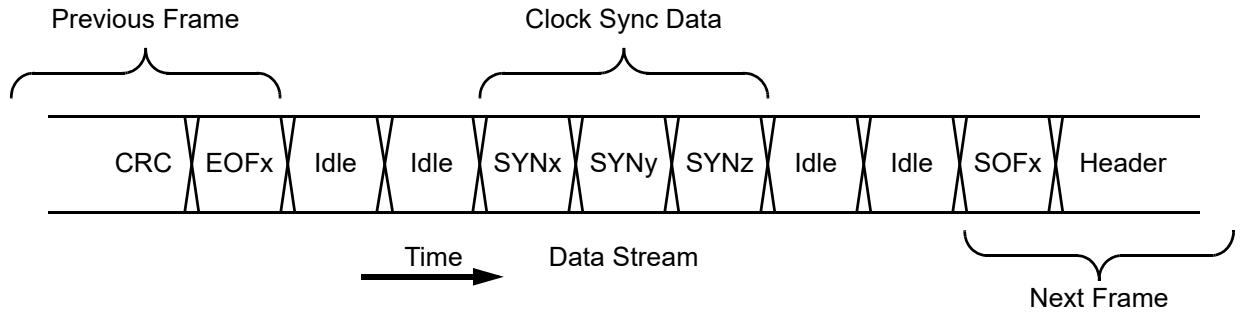

Figure 96 - Synchronization primitive substitution for Idle srimitives in inter-frame interval

Clock synchronization primitives shall consist of the SYNx, SYNy, and SYNz Ordered Sets shown in table 8. The 14-bit values contained within each primitive (SYNx, SYNy, and SYNz) are the concatenation of two 7-bit values (i.e., X1 and X2, Y1 and Y2, Z1 and Z2 respectively). Each 7-bit value shall have an equivalent neutral disparity data character (i.e., CS_X1 and CS_X2, CS_Y1 and CS_Y2, CS_Z1 and CS_Z2) as shown in table 111. The 42-bit time sync value shall be the concatenation of these neutral disparity data

characters such that the most significant 7-bits is represented by CS_X1 and the least significant 7-bits is represented by CS_Z2. The 42-bit value is CS_X1 CS_X2 CS_Y1 CS_Y2 CS_Z1 CS_Z2. Neutral disparity data characters shall be selected such that their decimal value is equal to the binary value being transmitted (i.e., if transmitting a value of 1111111b select neutral disparity data character FFh. If transmitting a value of 0000000b select neutral disparity data character EFh).

Table 111 - Neutral Disparity Character Values (part 1 of 2)

Symbol: Dxx.y									Neutral Disparity Character (hex)
xx	y								
	0	1	2	3	4	5	6	7	
00	(126)				(56)			(5)	00, 80, E0
01	(125)				(55)			(4)	01, 81, E1
02	(124)				(54)			(3)	02, 82, E2
03		(113)	(94)	(75)		(43)	(24)		23, 43, 63, A3, C3
04	(123)				(53)			(2)	04, 84, E4
05		(112)	(93)	(74)		(42)	(23)		25, 45, 65, A5, C5
06		(111)	(92)	(73)		(41)	(22)		26, 46, 66, A6, C6
07		(110)	(91)	(72)		(40)	(21)		27, 47, 67, A7, C7
08	(122)				(52)			(1)	08, 88, E8
09		(109)	(90)	(71)		(39)	(20)		29, 49, 69, A9, C9
10		(108)	(89)	(70)		(38)	(19)		2A, 4A, 6A, AA, CA
11		(107)	(88)	(69)		(37)	(18)		2B, 4B, 6B, AB, CB
12		(106)	(87)	(68)		(36)	(17)		2C, 4C, 6C, AC, CC
13		(105)	(86)	(67)		(35)	(16)		2D, 4D, 6D, AD, CD
14		(104)	(85)	(66)		(34)	(15)		2E, 4E, 6E, AE, CE
15	(121)				(51)			(0)	0F, 8F, EF
16	(120)				(50)			(133)	10, 90, F0
17		(103)	(84)	(65)		(33)	(14)		31, 51, 71, B1, D1
18		(102)	(83)	(64)		(32)	(13)		32, 52, 72, B2, D2
19		(101)	(82)	(63)		(31)	(12)		33, 53, 73, B3, D3
20		(100)	(81)	(62)		(30)	(11)		34, 54, 74, B4, D4
21		(99)	(80)	(61)		(29)	(10)		35, 55, 75, B5, D5
22		(98)	(79)	(60)		(28)	(9)		36, 56, 76, B6, D6
Legend: (x) = Decimal value of neutral disparity character									

Table 111 - Neutral Disparity Character Values (part 2 of 2)

Symbol: Dxx.y									Neutral Disparity Character (hex)
xx	y								
	0	1	2	3	4	5	6	7	
23	(119)				(49)			(132)	17, 97, F7
24	(118)				(48)			(131)	18, 98, F8
25		(97)	(78)	(59)		(27)	(8)		39, 59, 79, B9, D9
26		(96)	(77)	(58)		(26)	(7)		3A, 5A, 7A, BA, DA
27	(117)				(47)			(130)	1B, 9B, FB
28		(95)	(76)	(57)		(25)	(6)		3C, 5C, 7C, BC, DC
29	(116)				(46)			(129)	1D, 9D, FD
30	(115)				(45)			(128)	1E, 9E, FE
31	(114)				(44)			(127)	1F, 9F, FF
Total 134	13	19	19	19	13	19	19	13	
Legend: (x) = Decimal value of neutral disparity character									

24.4.4.2 Clock Synchronization Server Rules

The Clock Synchronization Server shall be capable of initiating clock synchronization events on a periodic basis or be disabled. The default synchronization event period shall be 1 second. The synchronization event period shall be settable from 1 microsecond to at least 60 seconds in 1-microsecond increments or set to zero.

The Clock Synchronization Server shall maintain a real-time clock register with sufficient bits to fulfill requirements for clock synchronization for applications of interest and as needed to support 24.2.5, Clock Synchronization Quality of Service. If the server's real-time clock register is less than 42-bits, a 42-bit value shall be generated by concatenating the real-time clock value with bits having a value of zero in such a way that the real-time clock value resides in the least significant bit positions. Primitive clock sync characters shall be generated from this 42-bit value.

The Clock Synchronization Server may be physically located in a Fabric or an Nx_Port.

The Clock Synchronization Server shall be addressed using Well-Known Address FF FF F6h and configured using the clock synchronization ELSs (see FC-LS-4).

24.4.4.3 Fabric Rules

Fabrics shall provide one port designated as the Fabric Clock Synchronization (FCS) Server port. All Fx_Ports shall be capable of periodically receiving clock synchronization primitives. Received clock synchronization primitives shall be interpreted the same as Fill Words by all ports except the FCS Server port. Following reception by the FCS Server port all Fx_Ports shall transmit clock synchronization primitives, except for the FCS Server port, using available inter-frame intervals. The real-time clock value transmitted by Fx_Ports shall be equal to the real-time clock value in the clock synchronization server, within the accuracy limits defined by the application(s) of interest.

24.4.4.4 Client Rules

Clients that support clock synchronization shall be capable of periodically receiving clock synchronization primitives Clients that do not support clock synchronization shall interpret received clock synchronization primitives the same as Fill Words or ignore them.

Supporting clients shall maintain a real-time clock register with sufficient bits to fulfill requirements for clock synchronization for applications of interest. The real-time clock register shall be loaded, upon receipt of three consecutive clock synchronization primitives, with the value received.

25 Congestion Signal

25.1 Overview

The Congestion Signal provides a method of indicating the presence of congestion conditions between two directly attached FC_Ports. A Congestion Signal may be sent by a first FC_Port to a second FC_Port to indicate the second FC_Port behavior is causing the first FC_Port to consume resources above defined thresholds.

Congestion Signals are primitive signals (see table 8 and table 14). A warning level of congestion is indicated by the Warning Congestion Signal (see 25.2.1). An alarm level of congestion is indicated by the Alarm Congestion Signal (see 25.2.2).

The ability of the FC_Port to transmit and/or receive Congestion Signals is indicated in the Congestion Detection Capability descriptor of the Exchange Diagnostic Capabilities ELS exchange (see FC-LS-5).

An FC_Port capable of supporting only one type of Congestion Signal value shall support the Warning Congestion Signal.

The threshold conditions necessary to activate transmission of a Congestion Signal are outside the scope of the standard.

25.2 Protocol

25.2.1 Warning Congestion Signal

If the transmission resources of an FC_Port are consumed above a warning threshold then that FC_Port may transmit a Warning Congestion Signal. The transmission of the Warning Congestion Signal shall continue at the negotiated frequency (see FC-LS-5) while consumption of transmission resources of an FC_Port are greater than or equal to a warning threshold. The transmission of the Warning Congestion Signal shall end if the consumption of the transmission resources of an FC_Port is less than a warning threshold or greater than or equal to the alarm threshold if the Alarm Congestion Signal is supported.

The transmit signal frequency of the Warning Congestion Signal is indicated during the Exchange Diagnostic Capabilities ELS exchange between the two ports of the link (see FC-LS-5).

25.2.2 Alarm Congestion Signal

If the transmission resources of an FC_Port are consumed above an alarm threshold then that FC_Port may transmit an Alarm Congestion Signal instead of the Warning Congestion Signal. The transmission of the Alarm Congestion Signal shall continue at the negotiated frequency (see FC-LS-5) while consumption of transmission resources of an FC_Port are greater than or equal to an alarm threshold. The transmission of the Alarm Congestion Signal shall end if the consumption of the transmission resources of an FC_Port is less than an alarm threshold. If the resource consumption is less than an alarm threshold, the Warning Congestion Signal may be transmitted until the resource consumption is less than a warning threshold.

The transmit signal frequency of the Alarm Congestion Signal is indicated during the Exchange Diagnostic Capabilities ELS exchange between the two ports of the link (see FC-LS-5).

Annex A
(normative)
FC-4 specific information and parameters

A.1 Overview

This annex specifies FC-4 specific information and parameters associated with this standard.

A.2 SCSI specific information and parameters

FC-4 specific SCSI logical unit number extended addressing methods (see SAM-6) are specified in table A.1.

Table A.1 - FC-4 specific SCSI logical unit number extended addressing methods

Extended Address Method Code	Length code	Extended Address Method Specific byte zero	Reference
Dh	11b	28h	FC-NVMe
All others	See SAM-6		

Annex B
(informative)
CRC generation and checking

B.1 Extract from FDDI

First part of this annex is an extract from Fiber Distributed Data Interface - Media Access Control (see FDDI-MAC). FDDI's Frame Check Sequence (FCS) methodology, polynomials and equations are used by Cyclic Redundancy Check (CRC) in FC-2. The term FCS is unique to FDDI and not used by Fibre Channel. CRC coverage is defined in 11.4.5.

B.2 Frame check sequence (FCS)

This annex specifies the generation and checking of the FCS field. This field is used to detect erroneous data bits within the frame as well as erroneous addition or deletion of bits to the frame. The fields covered by the FCS field include the FC, DA, SA, INFO, and FCS fields.

B.3 Definitions

B.3.1 Basic terms

F(x): A degree k-1 polynomial that is used to represent the k bits of the frame covered by the FCS sequence (see 11.4.5). For the purposes of the FCS, the coefficient of the highest order term is the first bit transmitted.

L(x): A degree 31 polynomial with all of the coefficients equal to one, i.e.,

$$L(x) = X^{31} + X^{30} + X^{29} + \bullet\bullet\bullet + X^{2} + X^{1} + 1$$

G(x): The standard generator polynomial

$$G(x) = X^{32} + X^{26} + X^{23} + X^{22} + X^{16} + X^{12} + X^{11} + X^{10} + X^{8} + X^{7} + X^{5} + X^{4} + X^{2} + X + 1$$

R(x): The remainder polynomial that is of degree less than 32

P(x): The remainder polynomial on the receive checking side that is of degree less than 32

FCS: The FCS polynomial that is of degree less than 32

Q(x): The greatest multiple of G(x) in

$$[X^{32} \bullet F(x) + X^{k} \bullet L(x)]$$

Q^{*}(x): $X^{32} \bullet Q(x)$

M(x): The sequence that is transmitted

M*(x): The sequence that is received

C(x): A unique polynomial remainder produced by the receiver upon reception of an error free sequence. This polynomial has the value

$C(X) = X^{32} \cdot L(X) / G(X)$

$= X^{31} + X^{30} + X^{26} + X^{25} + X^{24} + X^{18} + X^{15} + X^{14} + X^{12} + X^{11} + X^{10} + X^{8} + X^{6} + X^{5} + X^{4} + X^{3} + X + 1$

B.3.2 FCS generation equations

The equations that are used to generate the FCS sequence from F(x), are as follows:

a) FCS = L(X) + R(X) = R$(X)
where R$(X) is the one's complement of R(X);

NOTE 62 - Adding L(x) (all ones) to R(x) simply produces the one's complement of R(x); this equation is specifying that the R(x) is inverted before it is sent out.

b) $[X^{32} \cdot F(x) + X^{k} \cdot L(X)] / G(X) = Q(X) + R(X) / G(X)$; and

c) $M(x) = x^{32} \cdot F(x) + FCS$.

NOTE 63 - All arithmetic is modulo 2.

NOTE 64 - Equation c) above specifies that the FCS is appended to the end of F(x).

B.3.3 FCS checking

The received sequence M*(x) may differ from the transmitted sequence M(x) if there are transmission errors. The process of checking the sequence for validity involves dividing the received sequence by G(x) and testing the remainder. Direct division, however, does not yield a unique remainder because of the possibility of leading zeros. Thus a term L(x) is prepended to M*(x) before it is divided. Mathematically, the received checking is shown in the following equation:

$X^{32} [M^*(X)+X^{k} \cdot L(X)] / G(X) = Q^*(X) + P(X) / G(X)$

In the absence of errors, the unique remainder is the remainder of the division

$P(X) / G(X) = X^{32} \cdot L(X) / G(X) = C(X)$

B.4 CRC generation example for ACK_1 frame

An example of CRC generation for an ACK_1 frame is provided in a set of tables B.1 through B.8. Table B.1 shows an example of an ACK_1 fields without CRC and table B.2 shows the hexadecimal values for each field. Table B.3 shows the transmit bit order (03 80 40 C..0 80h) with the bytes in table B.2 transposed. Table B.4 shows the bit stream $X^{32} \cdot F(x) + X^{k} \cdot L(x)$ (FC 7F..0 80h) for the sample. Table B.5

shows the generated remainder (64 9E OB F7h) for the sample. Table B.6 shows the one's complement of the remainder (9B 61 F4 08h) for the sample. The transmitted bit sequence for the sample with the CRC (03 80 40 C..F4 08h) is shown in table B.7. The transmitted 10B stream for the sample with CRC is shown in table B.8.

Table B.1 - Sample FC-2 frame

Sample ACK_1 without CRC (Frame_Header fields)		
R_CTL	D_ID	
rrrr rrrr	S_ID	
TYPE	F_CTL	
SEQ_ID	DF_CTL	SEQ_CNT
OX_ID		RX_ID
Parameter		

Table B.2 - Sample ACK_1 without CRC

Sample Frame_Header			
C0	01	02	03
00	04	05	06
00	C0	00	00
02	00	00	03
FF	FF	FF	FF
00	00	00	01

Table B.3 - F(x)

Bytes in table B.2 transposed			
03	80	40	C0
00	20	A0	60
00	03	00	00
40	00	00	C0
FF	FF	FF	FF
00	00	00	80

Table B.4 - X^{32} F(x) + X^{k} L(x)

FC	7F	BF	3F
00	20	A0	60
00	03	00	00
40	00	00	C0
FF	FF	FF	FF
00	00	00	80

Table B.5 - R(x)

64	9E	0B	F7

Table B.6 - L(x) + R(x) = R$(x)

9B	61	F4	08

Table B.7 - M(x)

03	80	40	C0
00	20	A0	60
00	03	00	00
40	00	00	C0
FF	FF	FF	FF
00	00	00	80
9B	61	F4	08

Table B.8 - M(x) - (10B)

D0.6	D1.0	D2.0	D3.0
D0.0	D4.0	D5.0	D6.0
D0.0	D0.6	D0.0	D0.0
D2.0	D0.0	D0.0	D3.0
D31.7	D31.7	D31.7	D31.7
D0.0	D0.0	D0.0	D1.0
D25.6	D6.4	D15.1	D16.0

Annex C
(Informative)
Frame Scrambling

C.1 Serial Frame Scrambling and Descrambling Implementations

Figure C.1 shows an example of the serial bit-wise implementation of a data scrambler, and figure C.2 shows the equivalent example of a data descrambler for the polynomial:

$$G(x) = x^{58} + x^{39} + 1$$

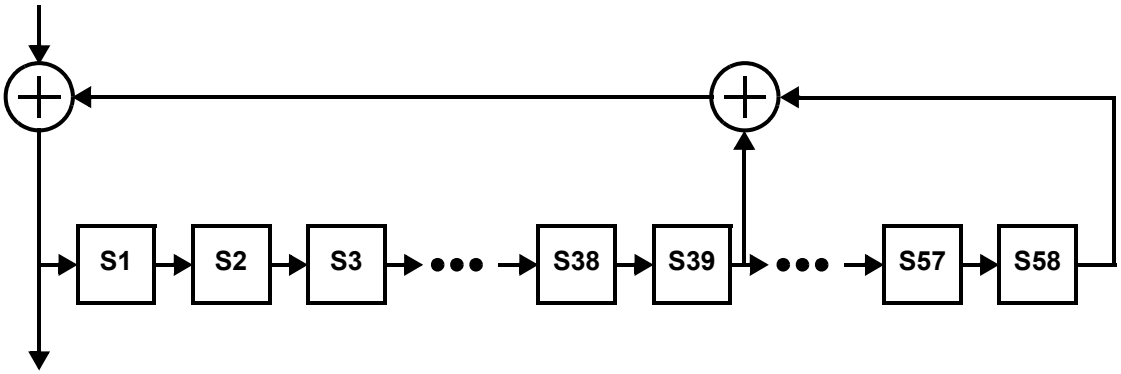

Figure C.1 - Serial Implementation of a Scrambler

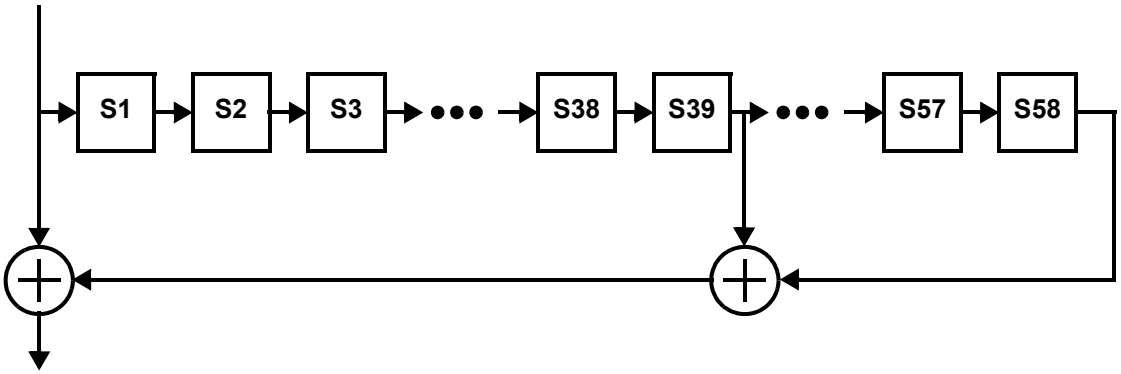

Figure C.2 - Serial Implementation of a Descrambler

C.2 Parallel Frame Scrambling and Descrambling Implementations

A 32-bit parallel implementation of a scrambler and descrambler circuit may be decomposed into two common components: a 58-bit linear feedback shift register (LFSR), and a 32-bit wide XOR tree. These two components are interconnected into either a scrambler or descrambler configuration as shown in figure C.3 and figure C.4.

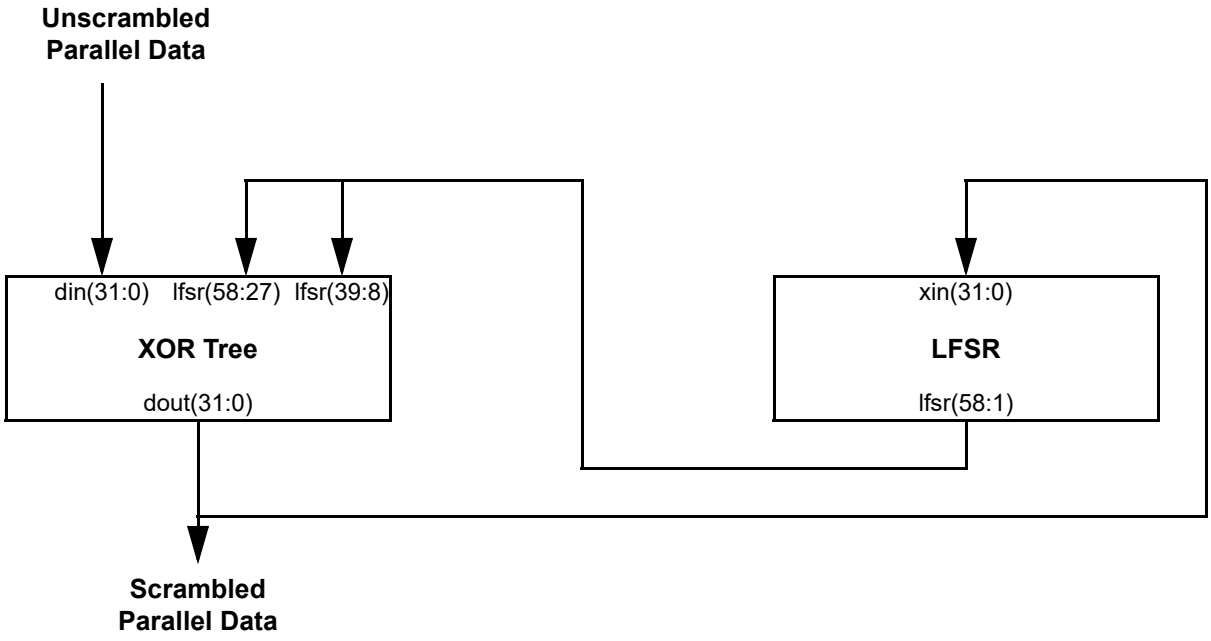

Figure C.3 - Parallel Implementation of a Scrambler

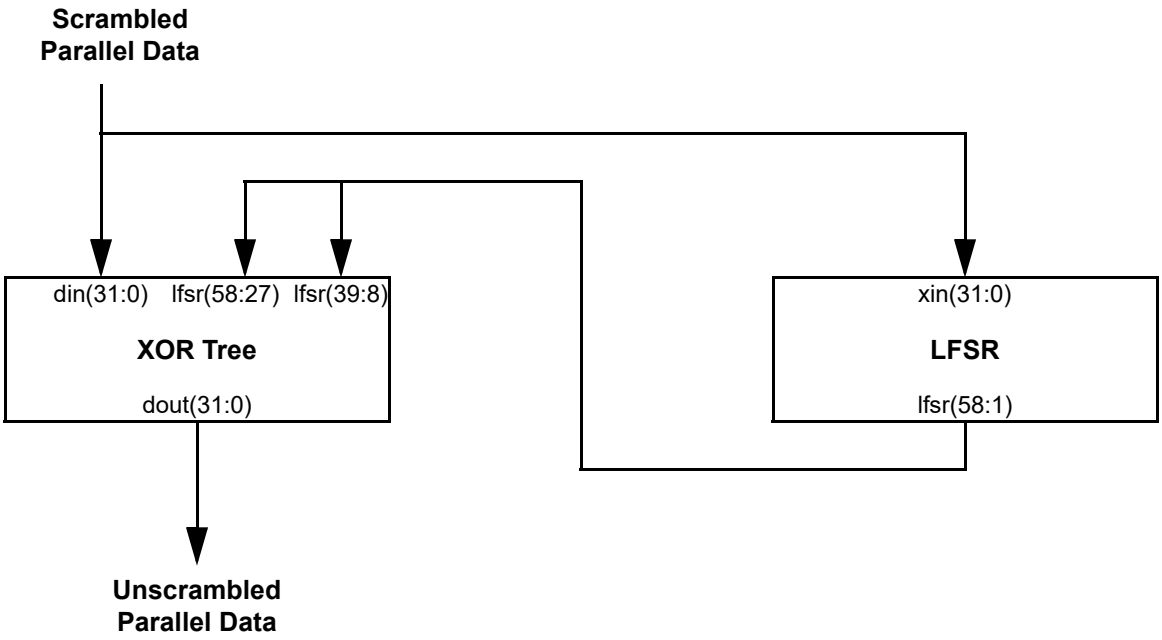

Figure C.4 - Parallel Implementation of a Descrambler

The XOR tree combinatorial logic component of the scrambler or descrambler has as inputs:

a) the 32-bit parallel unscrambled or scrambled input data (i.e., bits din(31) down to din(0));
b) the 32-bit parallel current state of LFSR bits lfsr(58) down to lfsr(27); and
c) the 32-bit parallel current state of LFSR bits lfsr(39) down to lfsr(8).

The XOR tree combinatorial logic component of the scrambler or descramble has as output the 32-bit parallel scrambled or unscrambled output data (i.e., dout(31) down to dout(0)). The combinatorial logic function of this block is defined by the following equations.

dout(31) = lfsr(58) ⊕ lfsr(39) ⊕ din(31)
dout(30) = lfsr(57) ⊕ lfsr(38) ⊕ din(30)
dout(29) = lfsr(56) ⊕ lfsr(37) ⊕ din(29)
dout(28) = lfsr(55) ⊕ lfsr(36) ⊕ din(28)
dout(27) = lfsr(54) ⊕ lfsr(35) ⊕ din(27)
dout(26) = lfsr(53) ⊕ lfsr(34) ⊕ din(26)
dout(25) = lfsr(52) ⊕ lfsr(33) ⊕ din(25)
dout(24) = lfsr(51) ⊕ lfsr(32) ⊕ din(24)
dout(23) = lfsr(50) ⊕ lfsr(31) ⊕ din(23)
dout(22) = lfsr(49) ⊕ lfsr(30) ⊕ din(22)
dout(21) = lfsr(48) ⊕ lfsr(29) ⊕ din(21)
dout(20) = lfsr(47) ⊕ lfsr(28) ⊕ din(20)
dout(19) = lfsr(46) ⊕ lfsr(27) ⊕ din(19)

dout(18) = lfsr(45) ⊕ lfsr(26) ⊕ din(18)
dout(17) = lfsr(44) ⊕ lfsr(25) ⊕ din(17)
dout(16) = lfsr(43) ⊕ lfsr(24) ⊕ din(16)
dout(15) = lfsr(42) ⊕ lfsr(23) ⊕ din(15)
dout(14) = lfsr(41) ⊕ lfsr(22) ⊕ din(14)
dout(13) = lfsr(40) ⊕ lfsr(21) ⊕ din(13)
dout(12) = lfsr(39) ⊕ lfsr(20) ⊕ din(12)
dout(11) = lfsr(38) ⊕ lfsr(19) ⊕ din(11)
dout(10) = lfsr(37) ⊕ lfsr(18) ⊕ din(10)
dout(9) = lfsr(36) ⊕ lfsr(17) ⊕ din(9)
dout(8) = lfsr(35) ⊕ lfsr(16) ⊕ din(8)
dout(7) = lfsr(34) ⊕ lfsr(15) ⊕ din(7)
dout(6) = lfsr(33) ⊕ lfsr(14) ⊕ din(6)
dout(5) = lfsr(32) ⊕ lfsr(13) ⊕ din(5)
dout(4) = lfsr(31) ⊕ lfsr(12) ⊕ din(4)
dout(3) = lfsr(30) ⊕ lfsr(11) ⊕ din(3)
dout(2) = lfsr(29) ⊕ lfsr(10) ⊕ din(2)
dout(1) = lfsr(28) ⊕ lfsr(9) ⊕ din(1)
dout(0) = lfsr(27) ⊕ lfsr(8) ⊕ din(0)

The LFSR combinatorial logic component of the scrambler or descrambler has as input the scrambled data (i.e., xin(31) down to xin(0) in the following equations) and has as output the 58-bit current state of the LFSR (i.e., lfsr(58) down to lfsr(1) in the following equations). The next state of the LFSR (i.e., next_lfsr(58) down to next_lfsr(1) in the following equations) is reached by a state transition defined by the following equations.

next_lfsr(58) = lfsr(26)
next_lfsr(57) = lfsr(25)
next_lfsr(56) = lfsr(24)
next_lfsr(55) = lfsr(23)
next_lfsr(54) = lfsr(22)
next_lfsr(53) = lfsr(21)
next_lfsr(52) = lfsr(20)
next_lfsr(51) = lfsr(19)
next_lfsr(50) = lfsr(18)
next_lfsr(49) = lfsr(17)
next_lfsr(48) = lfsr(16)
next_lfsr(47) = lfsr(15)
next_lfsr(46) = lfsr(14)
next_lfsr(45) = lfsr(13)
next_lfsr(44) = lfsr(12)
next_lfsr(43) = lfsr(11)
next_lfsr(42) = lfsr(10)
next_lfsr(41) = lfsr(9)
next_lfsr(40) = lfsr(8)

```
next_lfsr(39)   =   lfsr(7)
next_lfsr(38)   =   lfsr(6)
next_lfsr(37)   =   lfsr(5)
next_lfsr(36)   =   lfsr(4)
next_lfsr(35)   =   lfsr(3)
next_lfsr(34)   =   lfsr(2)
next_lfsr(33)   =   lfsr(1)
next_lfsr(32)   =   xin(31)
next_lfsr(31)   =   xin(30)
next_lfsr(30)   =   xin(29)
next_lfsr(29)   =   xin(28)
next_lfsr(28)   =   xin(27)
next_lfsr(27)   =   xin(26)
next_lfsr(26)   =   xin(25)
next_lfsr(25)   =   xin(24)
next_lfsr(24)   =   xin(23)
next_lfsr(23)   =   xin(22)
next_lfsr(22)   =   xin(21)
next_lfsr(21)   =   xin(20)
next_lfsr(20)   =   xin(19)
next_lfsr(19)   =   xin(18)
next_lfsr(18)   =   xin(17)
next_lfsr(17)   =   xin(16)
next_lfsr(16)   =   xin(15)
next_lfsr(15)   =   xin(14)
next_lfsr(14)   =   xin(13)
next_lfsr(13)   =   xin(12)
next_lfsr(12)   =   xin(11)
next_lfsr(11)   =   xin(10)
next_lfsr(10)   =   xin(9)
next_lfsr(9)    =   xin(8)
next_lfsr(8)    =   xin(7)
next_lfsr(7)    =   xin(6)
next_lfsr(6)    =   xin(5)
next_lfsr(5)    =   xin(4)
next_lfsr(4)    =   xin(3)
next_lfsr(3)    =   xin(2)
next_lfsr(2)    =   xin(1)
next_lfsr(1)    =   xin(0)
```

C.3 Scrambler and Descrambler Implementations in C

The following is an example C program that generates the scrambled serial data for transmission. The inputs are the serial data bits to be scrambled, a control indication to reinitialize the residual value, and a control indication to bypass the scrambler and hold the present state of the linear feedback shift register.

```
/* Serial Scrambler Implementation for: */
/* 1-bit data path                      */
/* x**58 + x**39 + 1 polynomial         */
unsigned long serial_scrambler ( unsigned char tx_data_bit, int reset_state, int scrambler_bypass) {

        static unsigned long scram_state[2]; /* scrambler state coded as two 32-bit values */
                unsigned char tx_scram_data_bit, x58, x39;

        /*************************/
        /* determine output data */
        /*************************/
        tx_data_bit = tx_data_bit & 0x1; /* input is only one bit */
        if ( scrambler_bypass != 0 ) { /* implement bypass */
                tx_scram_data_bit = tx_data_bit; /* input data driven directly to output */
        } else { /* scramble data with current scrambler state */
                /* isolate x**58 and x**39 terms for 1-bit data path width */
                x58 = ( scram_state[1] >> 25 );
                x39 = ( scram_state[1] >> 6 );
                /* calculate scrambled data */
                tx_scram_data_bit = (x58 ^ x39 ^ tx_data_bit) & 0x1;
        } /* end if */

        /*************************************/
        /* determine next state for scrambler */
        /*************************************/
        if ( reset_state != 0 ) { /* implement reset */
                scram_state[1] = 0x00294387;
                scram_state[0] = 0x98327338;
         } else if ( scrambler_bypass == 0 ) { /* advance scrambler state */
                scram_state[1] = ((scram_state[1] << 1) | (scram_state[0] >> 31)) & 0x03FFFFFF;
                scram_state[0] = (scram_state[0] << 1) | tx_scram_data_bit;
        } /* end if */
        /* the scrambler state remains unchanged if it is not reset and the data is not scrambled */

        return tx_scram_data_bit;
} /* end serial_scrambler */
```

The following is an example C program that descrambles received serial data bits. The inputs are the serial data bit to be descrambled, a control indication to reinitialize the residual value, and a control indication to bypass the descrambler and hold the present state of the linear feedback shift register.

```
/* Serial Descrambler Implementation for: */
/*     1-bit data path                    */
/*     x**58 + x**39 + 1 polynomial       */
unsigned long serial_descrambler ( unsigned long rx_data_bit, int reset_state, int descrambler_bypass) {

        static unsigned long descram_state[2]; /* descrambler state coded as two 32-bit values */
                unsigned char rx_unscram_data_bit, x58, x39;

        /*********************/
        /* determine output data */
        /*********************/
        rx_data_bit = rx_data_bit & 0x1; /* input is only one bit */
        if ( descrambler_bypass != 0 ) { /* implement bypass */
                rx_unscram_data_bit = rx_data_bit; /* input data driven directly to output */
        } else { /* scramble data with current scrambler state */
                /* isolate x**58 and x**39 terms for 1-bit data path width */
                x58 = ( descram_state[1] >> 25 );
                x39 = ( descram_state[1] >> 6 );
                /* calculate unscrambled data */
                rx_unscram_data_bit = (x58 ^ x39 ^ rx_data_bit) & 0x1;
        } /* end if */

        /****************************************/
        /* determine next state for descrambler */
        /****************************************/
        if ( reset_state != 0 ) { /* implement reset */
                descram_state[1] = 0x00294387;
                descram_state[0] = 0x98327338;
        } else if ( descrambler_bypass == 0 ) { /* advance descrambler state */
                descram_state[1] = ((descram_state[1] << 1) | (descram_state[0] >> 31)) & 0x03FFFFFF;
                descram_state[0] = (descram_state[0] << 1) | rx_data_bit;
        } /* end if */
        /* the descrambler state remains unchanged if it is not reset and the data is not descrambled */

        return rx_unscram_data_bit;
} /* end serial_descrambler */
```

The following is an example C program that generates the scrambled 32-bit data for transmission. The inputs are the 32-bit data to be scrambled, a control indication to reinitialize the residual value, and a control indication to bypass the scrambler and hold the present state of the linear feedback shift register.

```
/* Parallel Scrambler Implementation for: */
/* 32-bit data path */
/* x**58 + x**39 + 1 polynomial */
unsigned long parallel_scrambler ( unsigned long tx_data, int reset_state, int scrambler_bypass) {

        static unsigned long scram_state[2]; /* scrambler state coded as two 32-bit values */
                unsigned long tx_scram_data, x58to27, x39to8;

        /*********************/
        /* determine output data */
        /*********************/
        if ( scrambler_bypass != 0 ) { /* implement bypass */
                tx_scram_data = tx_data; /* input data driven directly to output */
        } else { /* scramble data with current scrambler state */
                /* isolate x**58 and x**39 terms for 32-bit data path width */
                x58to27 = ( scram_state[1] << 6 ) | ( scram_state[0] >> 26 );
                x39to8 = ( scram_state[1] << 25 ) | ( scram_state[0] >> 7 );
                /* calculate scrambled data */
                tx_scram_data = x58to27 ^ x39to8 ^ tx_data;
        } /* end if */

        /******************************/
        /* determine next state for scrambler */
        /******************************/
        if ( reset_state != 0 ) { /* implement reset */
                scram_state[1] = 0x00294387;
                scram_state[0] = 0x98327338;
        } else if ( scrambler_bypass == 0 ) { /* advance scrambler state */
                scram_state[1] = scram_state[0] & 0x03FFFFFF;
                scram_state[0] = tx_scram_data;
        } /* end if */
        /* the scrambler state remains unchanged if it is not reset and the data is not scrambled */

        return tx_scram_data;
} /* end parallel_scrambler */
```

The following is an example C program that descrambles received 32-bit data. The inputs are the 32-bit data to be descrambled, a control indication to reinitialize the residual value, and a control indication to bypass the descrambler and hold the present state of the linear feedback shift register.

```
/* Parallel Descrambler Implementation for: */
/* 32-bit data path */
/* x**58 + x**39 + 1 polynomial */
unsigned long parallel_descrambler ( unsigned long rx_data, int reset_state, int descrambler_bypass) {

        static unsigned long descram_state[2]; /* descrambler state coded as two 32-bit values */
                unsigned long rx_unscram_data, x58to27, x39to8;

        /*********************/
        /* determine output data */
        /*********************/
        if ( descrambler_bypass != 0 ) { /* implement bypass */
                rx_unscram_data = rx_data; /* input data driven directly to output */
        } else { /* scramble data with current scrambler state */
                /* isolate x**58 and x**39 terms for 32-bit data path width */
                x58to27 = ( descram_state[1] << 6 ) | ( descram_state[0] >> 26 );
                x39to8 = ( descram_state[1] << 25 ) | ( descram_state[0] >> 7 );
                /* calculate unscrambled data */
                rx_unscram_data = x58to27 ^ x39to8 ^ rx_data;
        } /* end if */

        /*********************************/
        /* determine next state for descrambler */
        /*********************************/
        if ( reset_state != 0 ) { /* implement reset */
                descram_state[1] = 0x00294387;
                descram_state[0] = 0x98327338;
        } else if ( descrambler_bypass == 0 ) { /* advance descrambler state */
                descram_state[1] = descram_state[0] & 0x03FFFFFF;
                descram_state[0] = rx_data;
        } /* end if */
        /* the descrambler state remains unchanged if it is not reset and the data is not descrambled */

        return rx_unscram_data;
} /* end parallel_descrambler */
```

C.4 Scrambler and Descrambler Implementation with XORs

These equations generate the scrambled word bits (scrm31 down to scrm0) by XORing the input word (d31 down to d0) with current state bits of the linear feedback shift (x1 to x58). These equations also descramble received words by XORing the input scrambled word with current state bits of the linear feedback shift register. The scrambler and descrambler differ in that the state of the linear feedback shift register of the scrambler is updated by loading the scrambled output word into the low order bits and shifting low order bits into high order bits, while the state of the linear feedback shift register of the descrambler is updated by loading the received input word into the low order bits and shifting low order bits into high order bits.

scrm31 = x58 ⊕ x39 ⊕ d31
scrm30 = x57 ⊕ x38 ⊕ d30
scrm29 = x56 ⊕ x37 ⊕ d29
scrm28 = x55 ⊕ x36 ⊕ d28
scrm27 = x54 ⊕ x35 ⊕ d27
scrm26 = x53 ⊕ x34 ⊕ d26
scrm25 = x52 ⊕ x33 ⊕ d25
scrm24 = x51 ⊕ x32 ⊕ d24
scrm23 = x50 ⊕ x31 ⊕ d23
scrm22 = x49 ⊕ x30 ⊕ d22
scrm21 = x48 ⊕ x29 ⊕ d21
scrm20 = x47 ⊕ x28 ⊕ d20
scrm19 = x46 ⊕ x27 ⊕ d19
scrm18 = x45 ⊕ x26 ⊕ d18
scrm17 = x44 ⊕ x25 ⊕ d17
scrm16 = x43 ⊕ x24 ⊕ d16
scrm15 = x42 ⊕ x23 ⊕ d15
scrm14 = x41 ⊕ x22 ⊕ d14
scrm13 = x40 ⊕ x21 ⊕ d13
scrm12 = x39 ⊕ x20 ⊕ d12
scrm11 = x38 ⊕ x19 ⊕ d11
scrm10 = x37 ⊕ x18 ⊕ d10
scrm9 = x36 ⊕ x17 ⊕ d9
scrm8 = x35 ⊕ x16 ⊕ d8
scrm7 = x34 ⊕ x15 ⊕ d7
scrm6 = x33 ⊕ x14 ⊕ d6
scrm5 = x32 ⊕ x13 ⊕ d5
scrm4 = x31 ⊕ x12 ⊕ d4
scrm3 = x30 ⊕ x11 ⊕ d3
scrm2 = x29 ⊕ x10 ⊕ d2
scrm1 = x28 ⊕ x9 ⊕ d1
scrm0 = x27 ⊕ x8 ⊕ d0

C.5 Scrambled Data Example

Table C.1 is an example of a scrambled frame. The linear feedback shift register of the scrambler is reset to an initial state of 029438798327338h by the SOF delimiter.

Table C.1 - Scrambled Frame Example

Word Position	Word Contents	Scrambled Data
Starting delimiter	<SOF>	<SOF>
0h	060405EFh	036480EFh
1h	000404E8h	7C9E03E9h
2h	08290000h	0FF007D8h
3h	00000000h	F59F1A4Ch
4h	8018FFFFh	CDF237F6h
5h	00000000h	FE5D775Ch
6h	00000000h	91714751h
7h	00000000h	2E7F35AAh
8h	00000002h	FE0D2A22h
9h	12018300h	D830F3EBh
Ah	20000000h	E6FAE951h
Bh	00000000h	DBF10F2Bh
Ch	00000000h	1D0DB668h
Dh	00000020h	AA79D18Bh
Eh	AA92695Ch	38AB00D5h
Ending delimiter	<EOF>	<EOF>

Annex D
(informative)
Data transfer protocols and examples

This annex provides Data transfer protocol examples.

D.1 Frame level protocol

D.1.1 Class 2 frame level protocol

The Class 2 frame level protocol employs:

a) Data frame;
b) ACK; and
c) R_RDY.

The Class 2 frame level protocol is illustrated in figure D.1.

1) The Originator initiates the Sequence with a Data frame embedded with SOF_{i2};
2) The Fx_Port responds with an R_RDY and forwards the Data frame to the destination;
3) The destination responds with an R_RDY, in addition to ACK;
4) The Fx_Port and the PN_Port respond each with R_RDY on receipt of ACK;
5) The Originator streams multiple Data frames and the Responder responds with ACK.
   A) ACK returns some information contained in F_CTL of the Data frame to which it is responding unaltered:
      a) First_Sequence bit;
      b) Last_Sequence bit;
      c) End_Sequence bit; and
      d) Sequence Initiative bit;

      and
   B) ACK toggles some information contained in F_CTL of the Data frame:
      a) Exchange Context bit; and
      b) Sequence Context bit.

   F_CTL usage for the Sequence is described in table D.1;
6) For each of these frames received, each PN_Port or Fx_Port returns a R_RDY;
7) SOF_{n2} is used to indicate the Sequence in progress;
8) The Sequence Initiator indicates the end of Sequence by the End_Sequence bit in F_CTL. However, the Sequence ends in the perspective of Sequence Recipient, only when all Data frames are received or accounted for; and
9) The Sequence Recipient transmits EOF_t only in the final ACK after all Data frames are received or accounted for.

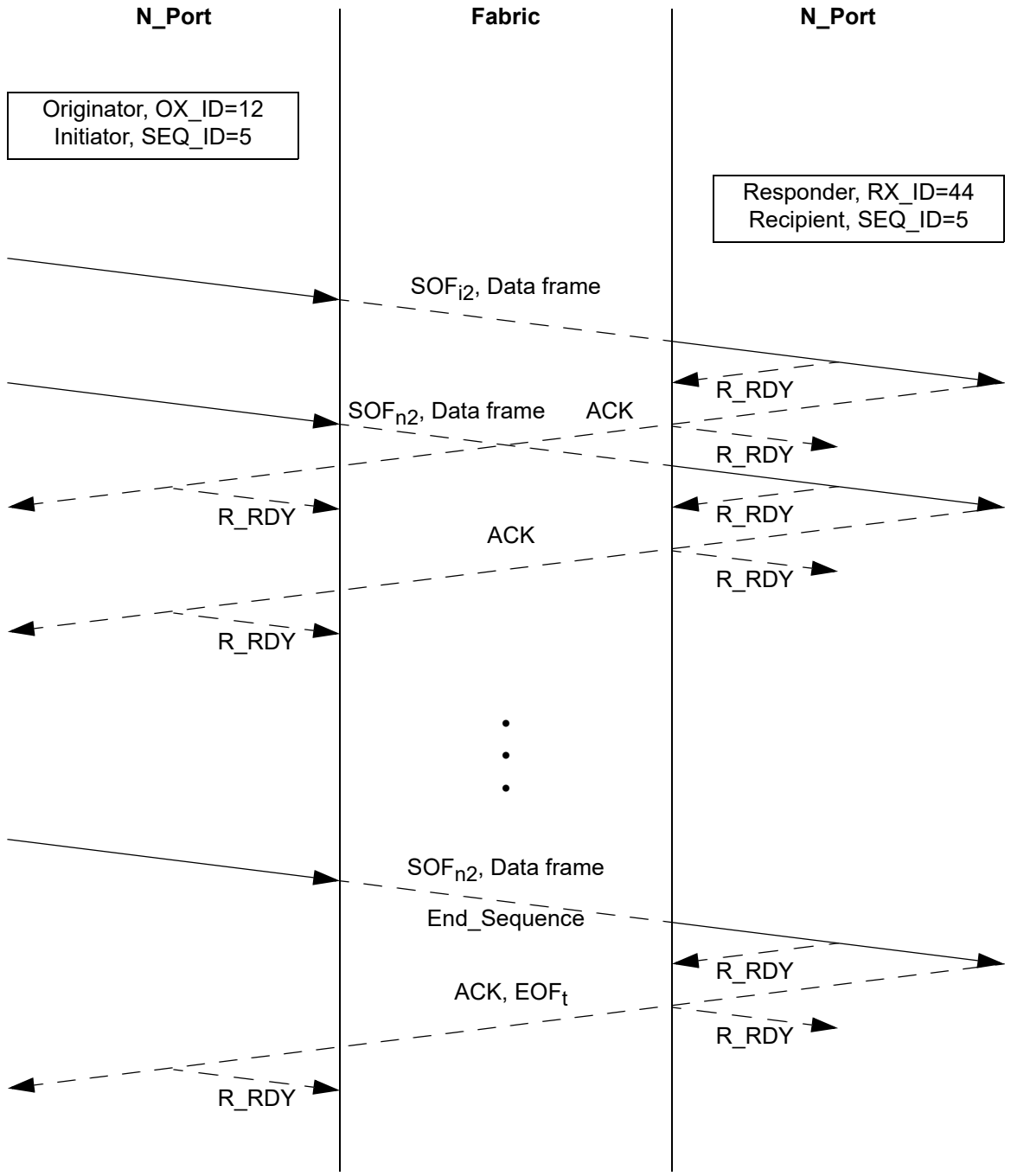

Figure D.1 - Class 2 frame level protocol

D.1.2 Class 3 Frame Level Protocol

The Class 3 frame level protocol employs:

a) Data frame; and
b) R_RDY.

The Class 3 frame level protocol is illustrated in figure D.2.

1) The Originator initiates the Sequence with a Data frame embedded with SOF_{i3};
2) The Fx_Port responds with an R_RDY and forwards the Data frame to the destination;
3) The destination responds with an R_RDY;
4) The Originator streams multiple Data frames. For each of these frames received, each PN_Port or Fx_Port returns a R_RDY. F_CTL usage for the Sequence is described in table D.2;
5) SOF_{n3} is used to indicate the Sequence in progress; and
6) The end of Sequence is indicated to the Sequence Recipient by the End_Sequence bit in F_CTL and EOF_t.

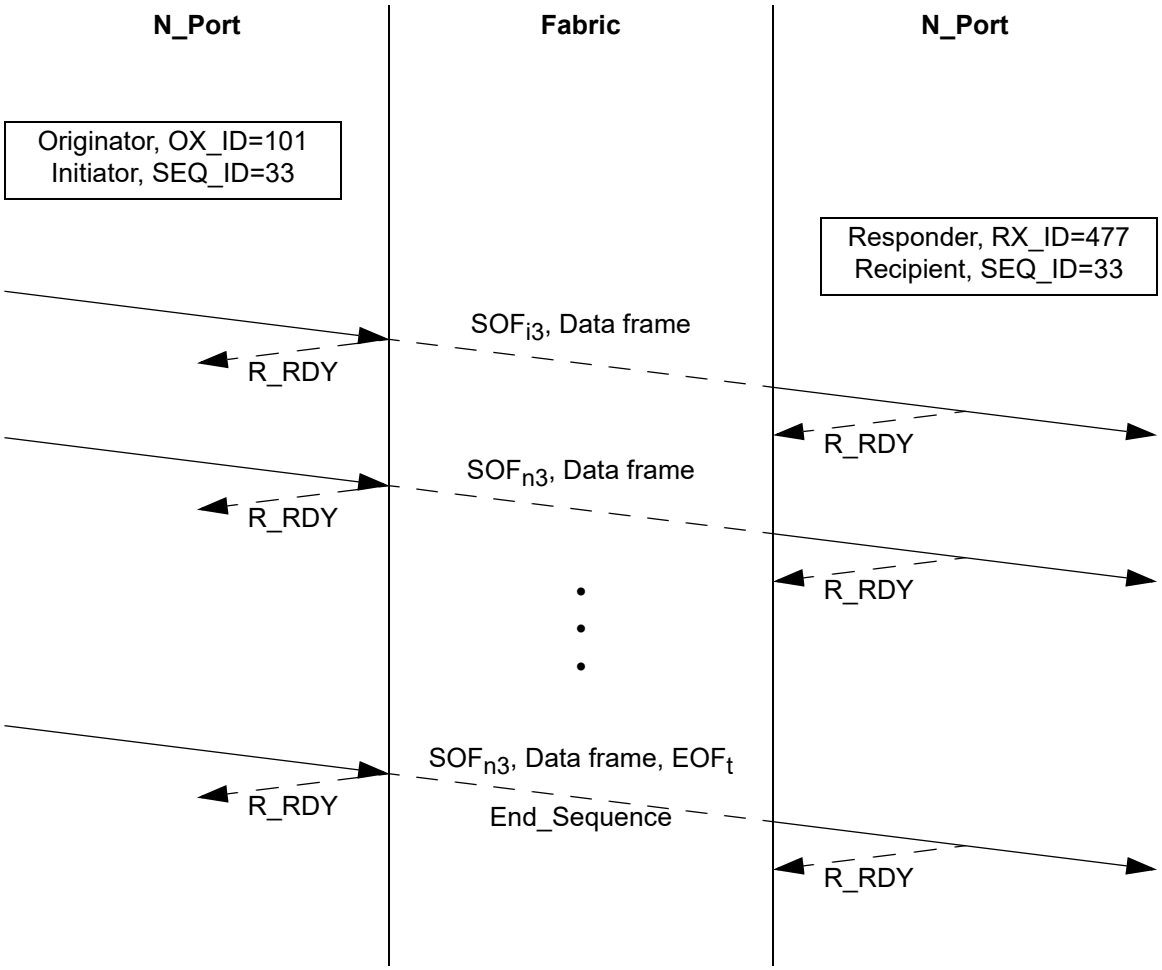

Figure D.2 - Class 3 frame level protocol

Table D.1 - F_CTL for Class 2 frame level protocols

Description	Exchange Context	Sequence Context	First Sequence of Exchange	Last Sequence of Exchange	End Sequence	Sequence transmit initiative
F_CTL Bits	**23**	**22**	**21**	**20**	**19**	**16**
First Data frame	0 (ORG)	0 (SI)	1 (First)	0 (Sequence)	0	0 (NM)
ACK	1 (RSP)	1 (SR)	1 (First)	0 (Sequence)	0	0 (NM)
Intermediate Data frame(s)	0	0	1	0	0	0 (NM)
ACK	1	1	1	0	0	0 (NM)
Last Data frame	0	0	1	0	1	0 (retain Sequence Initiative)
ACK	1	1	1	0	0	0 (NM)
Key - NM - Not Meaningful						

Table D.2 - F_CTL for Class 3 frame level protocol

Description	Exchange Context	Sequence Context	First Sequence of Exchange	Last Sequence of Exchange	End Sequence	Sequence transmit initiative
F_CTL Bits	**23**	**22**	**21**	**20**	**19**	**16**
First Data frame	0 (ORG)	0 (SI)	1 (First)	0 (Sequence)	0	0 (NM)
Intermediate Data frame(s)	0	0	1	0	0	0 (NM)
Last Data frame	0	0	1	0	1	0 (retain Sequence Initiative)
Key - NM - Not Meaningful						

D.2 Sequence level protocol example

Sequence level protocol is illustrated with a three Sequence Exchange in figure D.3. The first Sequence is a “read” request. The second Sequence transfers the “data”. The third Sequence transfers “ending status” and ends the Exchange.

Frames 1, 2, and 3 represent the first Sequence of an Exchange. In this example a Command Request for a Read operation is sent as a request Sequence. Note that Sequence Initiative is transferred to the Sequence Recipient.

Frames 4, 5, and 6 represent the first, intermediate and last frames of the data transferred in response to the Read request. Note that the Sequence Initiative is retained in order to start a Sequence with ending status.

Frames 7, 8, and 9 represent the ending status for the preceding data transfer and end the Exchange. Depending on the FC-4 Protocol, the Responder may not be allowed to end the Exchange, but transfer the Sequence Initiative to the Originator to complete the Exchange.

F_CTL usage

Use of F_CTL bits for these example Sequences are shown in table D.3.

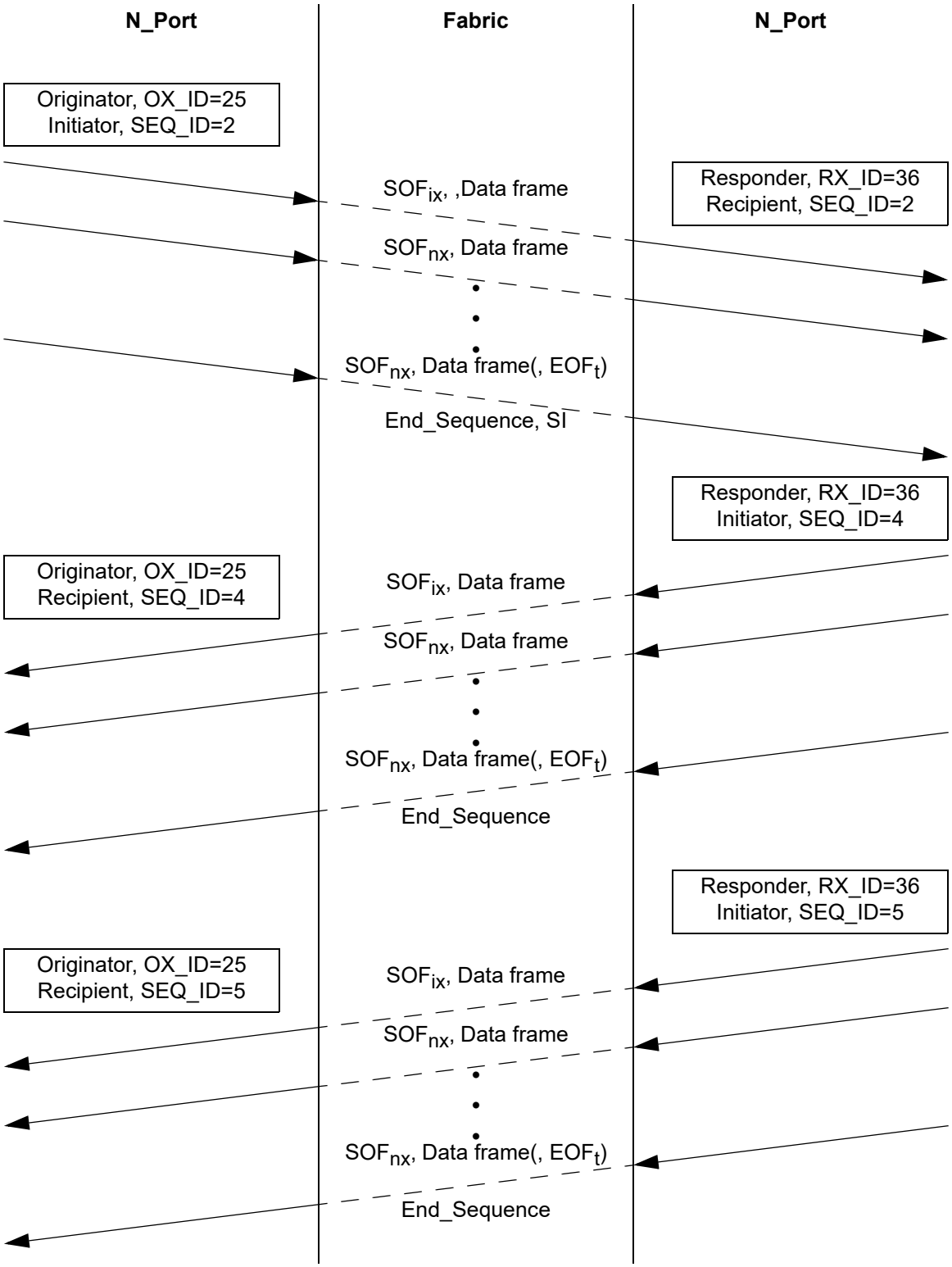

Figure D.3 - Sequence level protocol example

Table D.3 - Sequence level protocol example

Description	Exchange Context	Sequence Context	First Sequence of Exchange	Last Sequence of Exchange	End Sequence	Sequence transmit initiative
F_CTL Bits	**23**	**22**	**21**	**20**	**19**	**18**
First Data frame (SOF_{ix}) of the Exchange and of the first Sequence (a Read Request Sequence)	0	0	1	0	0	0 (NM)
Intermediate Data frame of first sequence	0	0	1	0	0	1
Last Data frame of first Sequence	0	0	1	0	1	1
First Data frame (SOF_{ix}) of intermediate Sequence (Reply Sequence)	1	0	0	0	0	0 (NM)
Intermediate Data frame of intermediate Sequence	1	0	0	0	0	0 (NM)
Last Data frame of intermediate Sequence	1	0	0	0	1	0
First Data frame (SOF_{ix}) of the last Sequence (Reply Status Sequence)	1	0	0	1	0	0 (NM)
Intermediate Data frame of the last Sequence	1	0	0	1	0	0 (NM)
Last Data frame of the last Sequence and of the Exchange	1	0	0	1	1	0

D.3 Class 2 frame level protocol example

N_Port Login is used to illustrate Class 2 frame flow as shown in figure D.4.

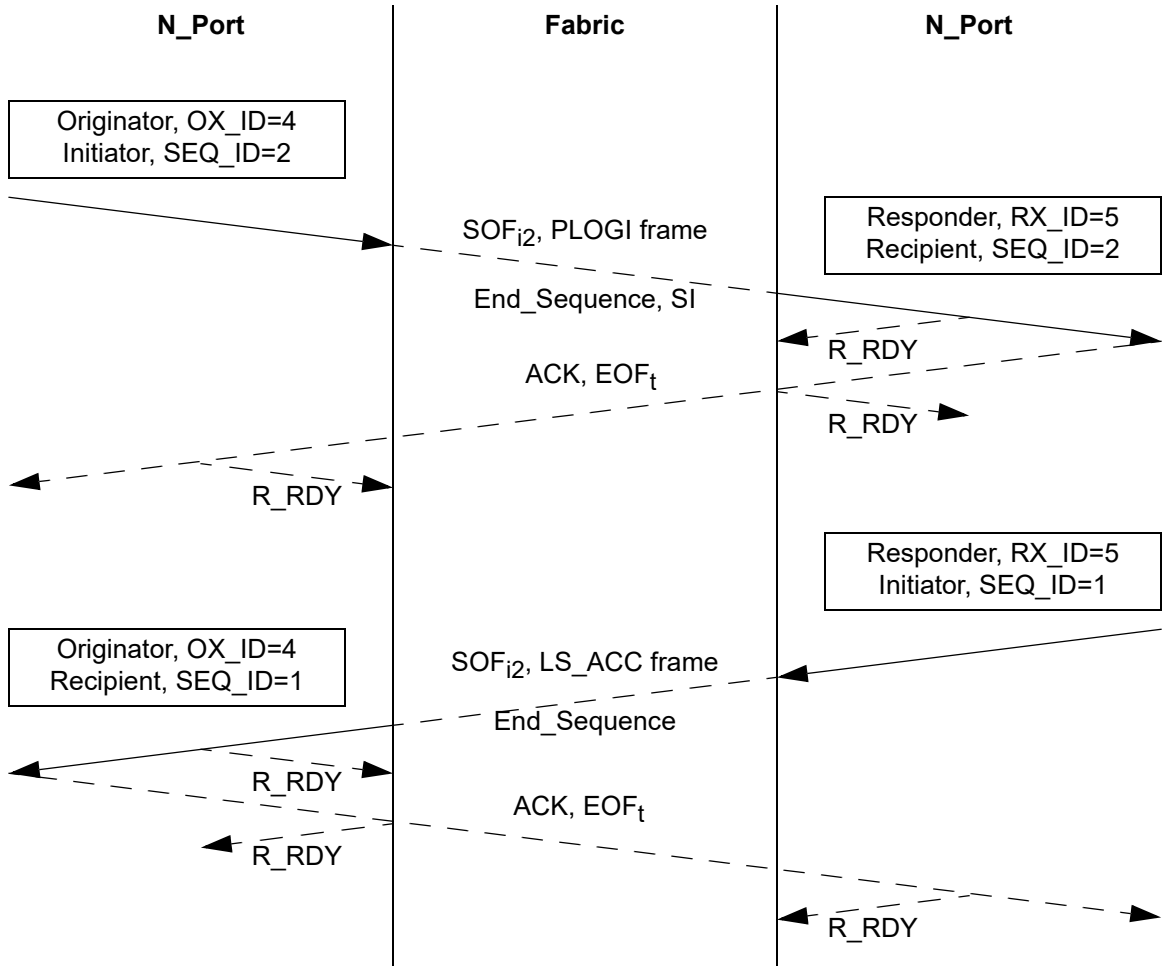

Figure D.4 - Class 2 frame level protocol - Login example

D.4 Class 3 frame level protocol example

N_Port Login is used to illustrate Class 3 frame flow as shown in figure D.5.

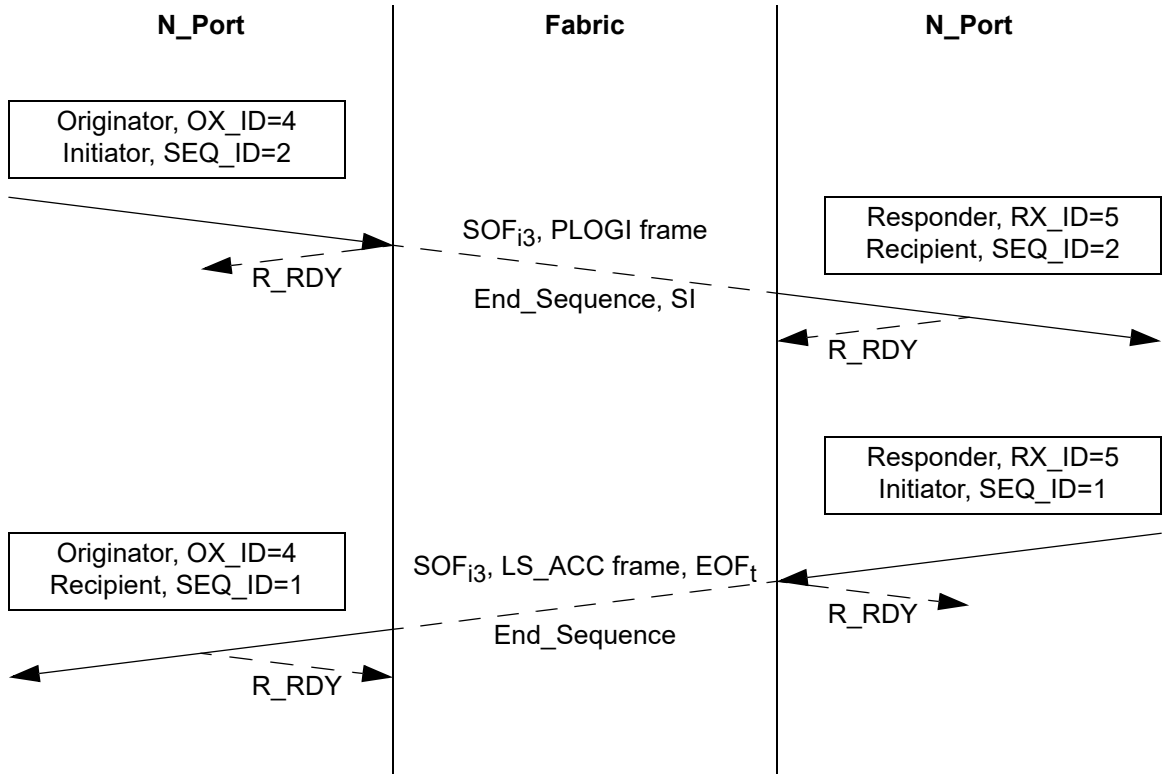

Figure D.5 - Class 3 frame level protocol - Login example

Annex E
(informative)
Out of order characteristics

E.1 Introduction

This annex describes some of the implications of out of order transfer. There are two cases considered:

a) out of order transfer of Data frames due to the inability of a Fabric to maintain order; and
b) out of order transmission of ACKs by an Nx_Port due to its buffer availability algorithms.

E.2 Out of order Data frame delivery

Based on Fx_Port service parameters, the delivery of frames during Class 2 service may occur as:

a) “Misordered Delivery”. The destination Nx_Port receives frames in an order different than a source Nx_Port sent them (i.e., the Fabric does not maintain the ordering of the frames); and
b) “Ordered Delivery”. The destination Nx_Port receives frames in the same order as the source Nx_Port sent them (i.e., the Fabric maintains the ordering of the frames).

The following is a discussion of the implications of misordered delivery of frames and class 2 Sequence recovery.

Misordered frame delivery may occur whenever there are multiple routes, within the Fabric, between two communicating Nx_Ports. When a Sequence is initiated, the individual frames of the Sequence are independently routed by the Fabric and, therefore, may take different routes through the Fabric, with some routes being longer or shorter than others. This may cause the misordered delivery of frames to the destination Nx_Port. Also, since each frame is independently routed, it is very difficult for the Fabric to purge, or flush from the Fabric, all the frames for a Sequence.

Because of the above, this standard has provided the following functions to aid in the detection and recovery of Sequences abnormally terminated due to time-out, e.g., because a frame was lost:

a) the R_A_TOV timeout to discard in transit frames (see 22.3.5); and
b) establishment of a Recovery_Qualifier for the duration of the R_A_TOV time (see 16.3.2.2.4).

These functions have several implications:

a) when an Nx_Port is initialized, it may not have knowledge of Sequences initiated prior to initialization, (e.g., an Nx_Port may be powered off after sending a Sequence, and then powered back on). Some (or all) frames of this prior Sequence may still be traversing the Fabric after the Nx_Port has been initialized. After initialization, an Nx_Port waits R_A_TOV time before it initiates any Sequences so that any duplicate frames in the Fabric are discarded (see 22.3.5);
b) the specification for Recovery_Qualifiers (see 16.3.2.2.4) implies that
   A) an Nx_Port maintains a list of Recovery_Qualifiers;
   B) entries are added to this list when a Sequence is abnormally terminated;
   C) entries are deleted from this list when R_A_TOV has expired for the entry; and
   D) the list is referenced prior to sequence initiation to ensure that a Data frame that falls within the range of a Recovery_Qualifier is not transmitted;

   and

c) if a subset of the entire Sequence_Qualifier (e.g., X_ID) is used to route and store incoming frames, a frame falling within the range of a Recovery_Qualifier may not be detected until after the frame is placed in a receive buffer and the Frame_Header is validated. This has implications on Credit and buffer management.

   The Sequence to which this frame belongs was abnormally terminated and all the Credit for the Sequence was recovered. As a result, this frame is an “unexpected” frame that is not accounted for by the current Credit management within the Nx_Port. Therefore, it may be occupying a buffer that a source Nx_Port believes is available. This may cause another frame to receive a P_BSY, even though the sender of the busied frame obeyed the Credit rules.

E.3 Out of order ACK transmission

The transmission of ACK frames in Class 2 service may occur as:

a) out of order transmission. In this case, the Sequence Recipient is not acknowledging Data frames in the SEQ_CNT order, (i.e., the corresponding ACK frames are not being sent in SEQ_CNT order); and
b) in order transmission. In this case, the Sequence Recipient is acknowledging Data frames in the SEQ_CNT order, (i.e., the corresponding ACK frames are being sent in SEQ_CNT order).

The implications of out of order transmission of ACKs and ordered transmission of ACKs are:

a) with out of order transmission, the Credit for a lost ACK is not recovered until after a Sequence time-out is detected, (i.e., the Credit is lost until the E_D_TOV time has expired); and
b) with in order transmission, the reception of an ACK recovers the Credit for all Data frames with that SEQ_CNT or lower, regardless of whether previous ACKs were received.

Annex F
(informative)
Link Error Status Block

F.1 Introduction

In this annex, guidelines are provided to manage the Link Error Status Block (see 22.4.8).

F.2 Link Failure Counters

Four types of Link Failures are recorded in individual counters in LESB. The Link Failure Counters are:

a) Link Failure Count (Word 0) counts miscellaneous link errors;
b) Loss-of-Synchronization Count (Word 1) counts confirmed and persistent synchronization losses;
c) Loss-of-Signal Count (Word 2); and
d) Primitive Sequence Protocol Error Count (Word 3).

The conditions under which individual counters increment are summarized in table F.1. For specific state changes, related nomenclature, considerations and conditions, see table 26.

F.3 Invalid Transmission Word

The Invalid Transmission Word Counter (Word 4) increments, once for every Invalid Transmission Word received (see 6.3.4.2), and once for every Invalid 64B/66B Transmission Word (see 6.4.3), except:

a) no Transmission Word errors are counted if the receiver is in the Loss-of-Synchronization state (see 6.2); and
b) no Transmission Word errors are counted if the Port is in the OL2 State or the OL3 State (see 7.7).

F.4 Invalid CRC Count

The Invalid CRC Count (Word 5) increments, once for every received frame that meets one of the following conditions:

a) the Port is in the Active State and the received frame's CRC is in error and the frame is either missing an EOF delimiter or the EOF delimiter is an EOF_n or EOF_t (see 5.2.7.2 and 5.3.7.1); or
b) the Port is in the Active State and the received frame's CRC is in error (see 11.4.5).

NOTE 65 - The frames received with EOFni or EOFa may be excluded from consideration.

F.5 Link Failure Counter Triggers

Table F.1 shows the specific Link Failure Counters that are incremented when an input event occurs. A “-” in a cell indicates that no link error count is incremented. Any other entry in a cell indicates that if the specific input event occurs in that state, the indicated link error counter shall be incremented.

Table F.1 - Link Failure Counters and management

State	ACTIVE	LINK RECOVERY			LINK FAILURE		OFFLINE		
Substate	(AC)	(LR1)	(LR2)	(LR3)	(LF1)	(LF2)	(OL1)	(OL2)	(OL3)
	IDLE RECV	LR XMIT	LR RECV	LRR RECV	NOS RECV	NOS XMIT	OLS XMIT	OLS RECV	WAIT OLS
Input Event									
L >> LR	-	-	-	-	-	-	-	-	note a PER
L >> LRR	note a PER	-	-	-	-	-	-	-	note a PER
L >> IDLES	-	-	-	-	-	-	-	-	-
L >> OLS	-	-	-	-	-	-	-	-	-
L >> NOS	LF	LF	LF	LF	-	note b -	note c LF	LF	note b -
Loss-of-Signal	LOSIG	LOSIG	LOSIG	LOSIG	LOSIG	-	-	-	-
Loss of Sync > Limit	LOSYN	note d LOSYN	note d LOSYN	note d LOSYN	note d LOSYN	-	-	-	-
Event time-out (R_T_TOV)	-	LF	LF	LF	LF	-	-	-	-

LEGEND:
L >> means receiving from the Link
"-" means no change to any counter
LF: means increment Link Failure Counter (Word 0)
LOSYN: means increment Loss-of-Synchronization Counter (Word 1)
LOSIG: means increment Loss-of-Signal Counter (Word 2)
PER: means increment Primitive Sequence Protocol Error Counter (Word 3)

Notes:

a) Abnormal Link_Response from the attached Port

b) A normal event if the Port is in loopback, or if the attached Port is in the OL3 State.

c) Only increments if the condition occurs while performing the Online-to-Offline protocol.

d) This condition does not occur, since the Event Time-out occurs first

Annex G
(informative)
Clock Synchronization

G.1 Introduction

The goal of the Clock Synchronization Service described in clause 24 is to provide each participating node with a continuously-running counter that, at all times, contains exactly the same value that is found in the counter in every other participating node. Clause 24 provides the message definitions and formats required to accomplish this goal in an interoperable way. But the extent to which the value in a given node's counter actually matches the value in any other node's counter is dependent on the techniques used to implement the elements described in clause 24.

For systems with low accuracy requirements, the CSU ELS frames could be handled in software with no special hardware/firmware support. The client software could use any existing timer resources to maintain its local version of the counter. For systems that require the higher levels of accuracy, dedicated hardware assistance would be needed.

It is the purpose of this annex to present several possible hardware implementations and to discuss the sources of error in each of them.

Clause 24 defines two separate mechanisms for transfer of the synchronizing information -- the ELS method and the Primitive Signal method. This annex addresses only the ELS method.

G.2 Discussion

G.2.1 Introduction

The approach used is to first present a basic model of an NL_Port, in order to give a context for the rest of the discussion. Then basic hardware-based implementations for each topology is presented along with a discussion of the various sources of error and approaches for reducing these errors. The topologies discussed include point-to-point (see G.2.4), Fabric (see G.2.5), and loop (see G.2.6).

G.2.2 A Model of an NL_Port

Figure G.1 presents a model of a generic NL_Port that is used as the basis for the discussions in this annex. The elasticity buffer in the receive path and the multiplexer in the transmit path exist to support the operation of the port in an Arbitrated Loop topology. The remainder of the components support all topologies. For purposes of this annex, the interaction of the host with the port logic occurs entirely through data structures in the port's Memory that the host accesses via the Host Bus.

As Transmission Words are received, they pass through a Deserializer/Decoder (Des/Decode), and are checked for validity and for the various types of frame delimiters (CRC/Valid). Valid frames destined for the local node are pushed onto the Receive FIFO. From the Receive FIFO, frames are stored as data structures in the Memory. The host is informed of the presence of incoming frames via an unspecified mechanism, and the data is then transferred to the host via the host bus.

For outgoing data, the host and the port cooperate (in an unspecified manner) to cause the outgoing frames to be placed into the port's Memory. From there, the frames are transferred into the Trans FIFO. The frames are sent through the CRC logic, the multiplexer, and the encoder/serializer logic and onto the link. The CRC logic calculates the CRC value that is placed in the outgoing frame at the appropriate location.

For Arbitrated Loop operation, a port that is in neither the OPEN nor the OPENED state, incoming Transmission Words are sent directly from the Elasticity buffer to the multiplexer and out onto the link via the encoder/serializer logic.

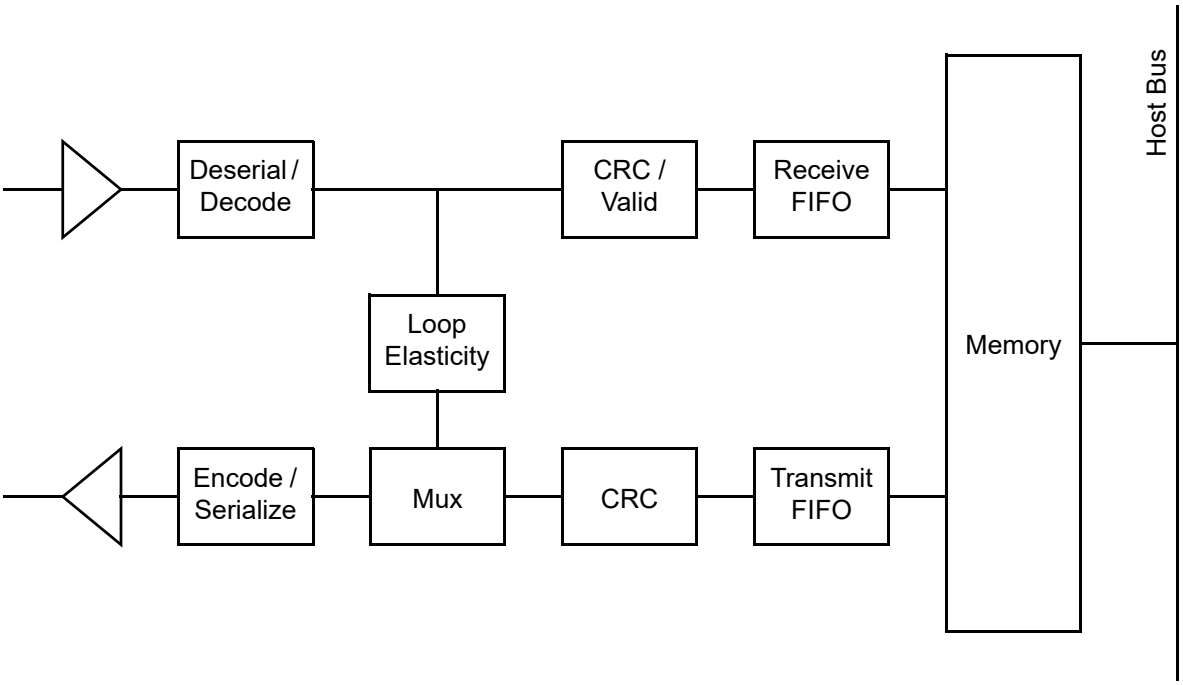

Figure G.1 - Generic NL_Port

G.2.3 Hardware-Assisted Clock Synchronization

Figure G.2 shows the location of the Clock Sync circuitry that supports the Server. Figure G.3 shows the location of the corresponding circuitry that supports the Client.

For the Server, the Host Bus connection allows the loading of an initial value into the master clock. The Server periodically sends the master clock value to the clients in a CSU ELS frame. A multiplexer at the input to the CRC logic allows the CSU frame to bypass the Transmit FIFO, thereby eliminating unnecessary delays caused by other traffic.

For the Client (see figure G.3), the Clock Sync circuitry receives the CSU ELS frame prior to the Receive FIFO, thereby eliminating unnecessary delays caused by other traffic. The Host Bus connection allows application software to access the clock sync value. Note that for highest accuracy in applying time tags, the clock sync value should be accessed directly by hardware (i.e., without software intervention).

Figures G.4 and G.5 show an implementation of the Clock Sync logic for the Server and the Client, respectively. These represent a very basic implementation.

G.2.4 A Point-to-Point System

G.2.4.1 Introduction

Although a simple point-to-point topology may not be of great practical interest, it is discussed first because it simplifies the discussion of the errors involved. All of the errors discussed in this section are applicable to all topologies. For reference in the following discussions, figure G.6 shows the Clock Synchronization model from 24.3 with the Fabric removed.

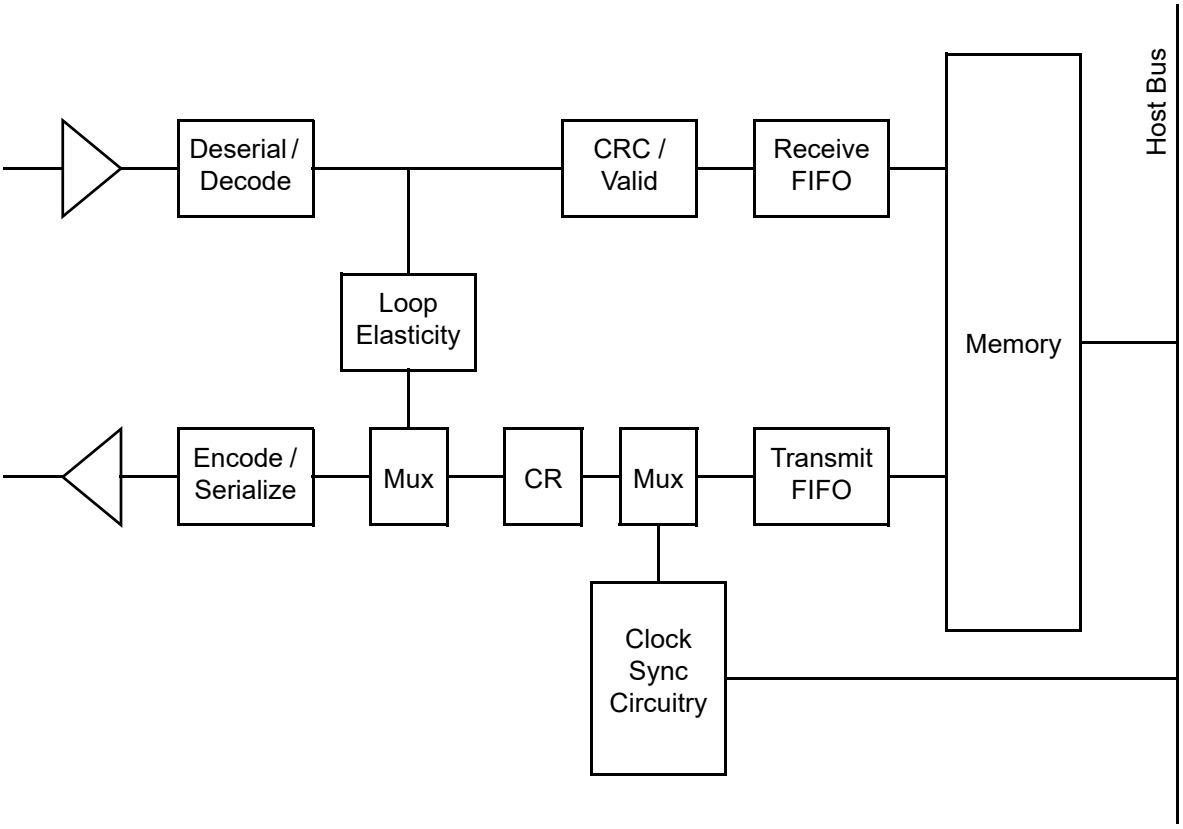

Figure G.2 - Server NL_Port Clock Sync Context

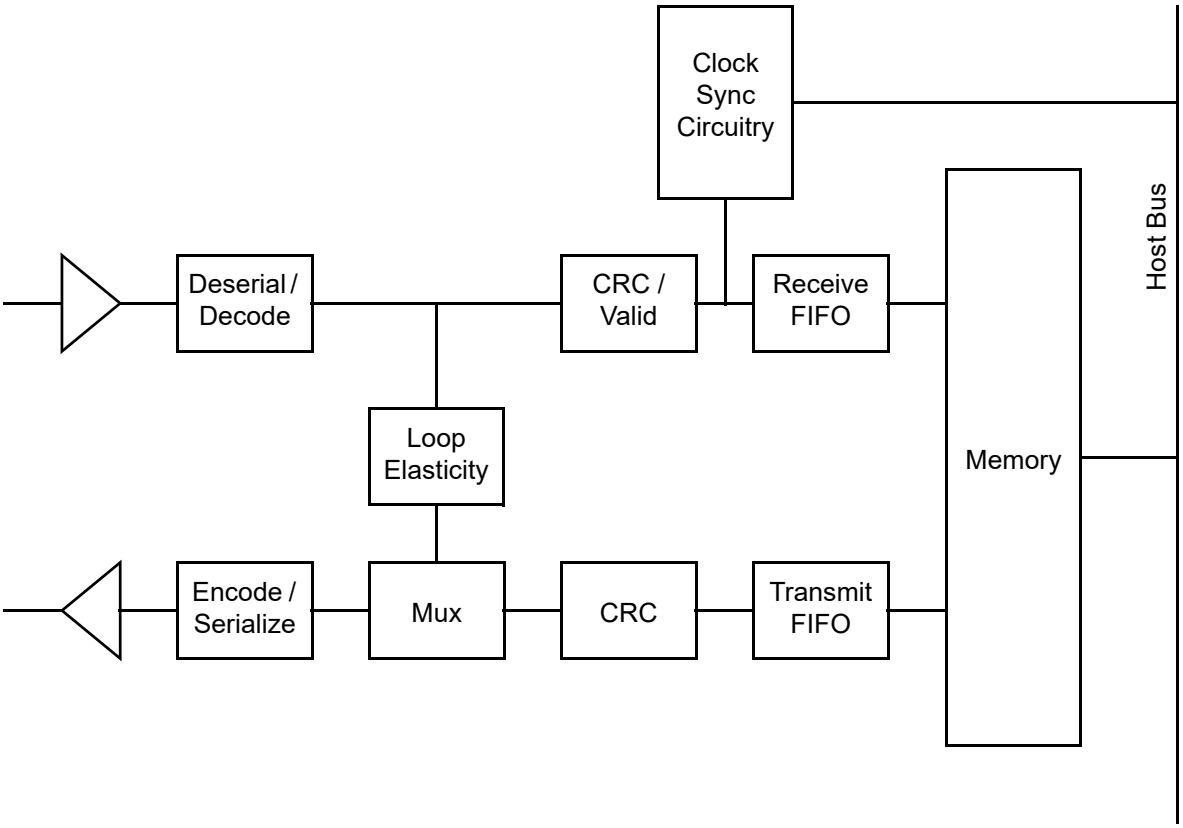

Figure G.3 - Client NL_Port Clock Sync Context

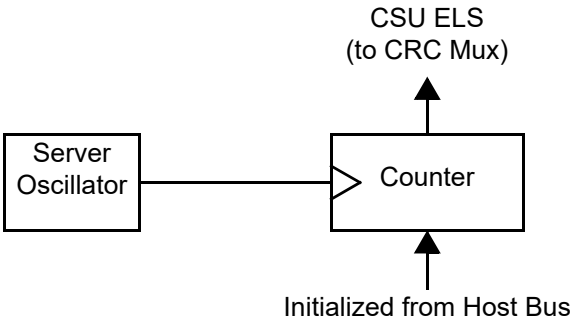

Figure G.4 - Server Clock Sync Implementation (Basic Approach)

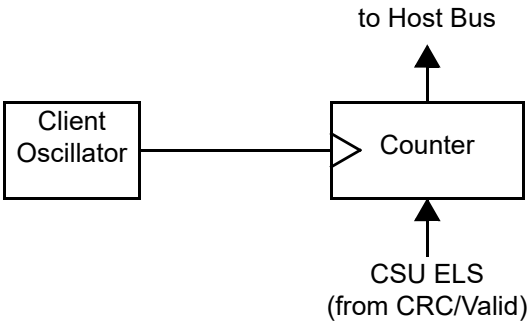

Figure G.5 - Client Clock Sync Implementation (Basic Approach)

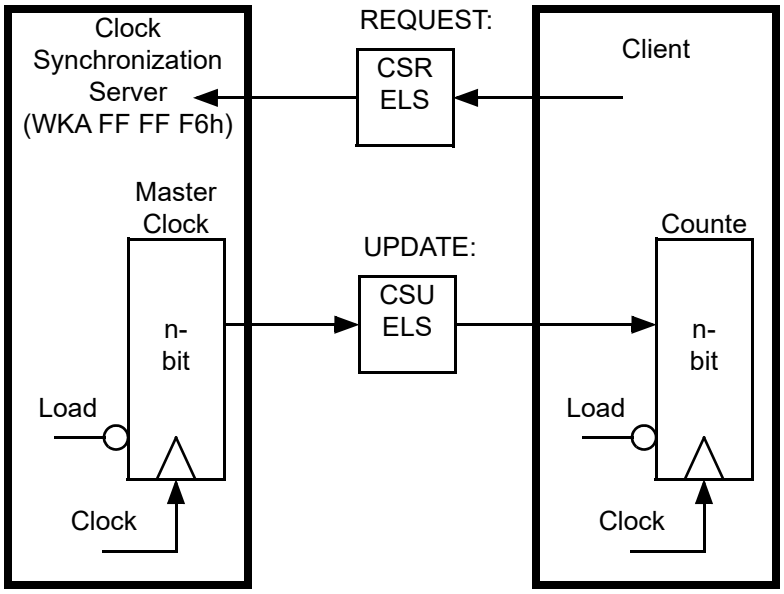

Figure G.6 - ELS Clock Sync Model - point-to-point

G.2.4.2 Discussion of Errors

G.2.4.2.1 Introduction

Clock synchronization errors usually consist of both a deterministic and non-deterministic components. If extremely accurate clock information is needed, a system designer may measure or calculate the deterministic components of the errors and adjust the observed clock value to account for them. But the non-deterministic component is, by its nature, not subject to adjustment in the same way by the system designer.

G.2.4.2.2 Client Oscillator Frequency Error

Even though the counters in the server and the client nominally count at the same frequency, the oscillators that drive them are independently subject to the tolerances specified in the Fibre Channel standard. So even if they were to contain the exact same value at some point in time (e.g., just after receipt of the CSU ELS at the client), the values would slowly drift apart as time passes, until the next CSU ELS arrives. Figure G.7 illustrates this effect. The client oscillator is assumed to be of slightly higher frequency than that of the server. Near the center of the figure, it is assumed that another CSU ELS is received at the client. This results in the value of the client clock being corrected so that it again matches the server clock.

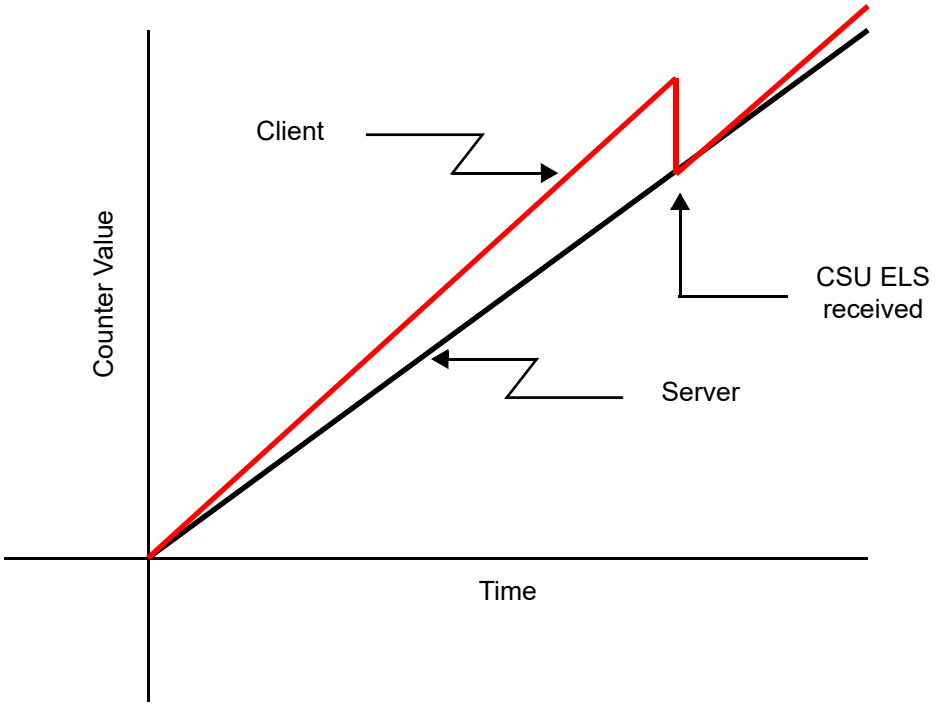

Figure G.7 - Client Clock Drift

The correction of the client's clock when it receives the CSU ELS limits the maximum error as seen by the user of the client's clock. However, it may also result in that user seeing time appear to run backwards. Reading the clock just prior to receipt of the CSU ELS may return a value that is larger than the value returned if the clock is read just after receipt of the CSU ELS. This non-monotonic behavior may cause difficulties with some algorithms that are intended to interpret these values.

The error due to oscillator frequency differences is essentially deterministic. A given client may determine the degree to which its oscillator frequency exceeds (or falls behind) that of the server by observing the time between receipt of CSU ELS frames, and the degree to which it's clock value exceeds (or lags) the value in the received CSU ELS. This error may then be largely compensated for, either by hardware or by software algorithms.

Analysis:

The parameters used in this analysis are given in table G.1

Table G.1 - Parameters used in analysis

Symbol	Definition
T_CSU	The period of the CSU ELS frame (i.e., the time between successive CSU frames).
f_server	The frequency of the oscillator in the Clock Synchronization server.
f_client	The frequency of the oscillator in the Clock Synchronization client.
f_tol	The allowed tolerance of the Fibre Channel transmission frequency in either direction from the nominal frequency.
f_nom	The nominal frequency of Fibre Channel transmission.
freq_error	The maximum client clock error due to mismatch of client vs. server oscillator frequencies.

The maximum error occurs just prior to the receipt of a CSU ELS frame. Specifically,

freq_error = T_CSU • [f_client / f_server] - T_CSU

The worst mismatch occurs when one oscillator is at the fast end of the allowable range, and the other is at the slow end. So assume that:

f_client = f_nom • (1 + f_tol), and

f_server = f_nom • (1 - f_tol)

Then, since f_tol = 100 ppm,

freq_error ~ T_CSU • ($2 \cdot 10^{-4}$)

An example is given in table G.2.

Table G.2 - Example of analysis results

T_CSU	freq_error
100 m	20 µs
1 s	200 µs

G.2.4.2.3 Link Propagation Delay Error

In the preceding discussion, it was assumed that the CSU ELS that was sent from the server was received instantaneously at the client. In general this is not exactly true, since the frame needs to traverse the link that connects the two nodes. Since the value in the CSU ELS is not updated as it travels down the link, the value received by the client represents the value of the server's clock at some time in the past. For a given system, with fixed cable lengths, this error, too, is deterministic. For many systems of interest, the error is negligible. If it is not, its magnitude may be determined by the system designer and be compensated for. This assumes, of course, that the cable lengths are known and fixed.

Analysis:

The parameters used in this analysis are given in table G.3

Table G.3 - Parameters used in analysis

Symbol	Definition
link_delay_error	The error caused by the fact that the Clock Count value in the CSU ELS frame does not update as the frame travels down the cable from the transmitter to the receiver.

The magnitude of this error depends on the properties of the specific cable involved. Nominal estimates of delay are:

Electrical cables: 5.5 ns / meter

Optical cables: 5 ns / meter

Example:

For a 33-meter electrical cable:

link_delay_error ~ 33 m • 5.5 ns / m, or

link_delay_error ~ 182 ns

For a 10-Km optical cable,

link_delay_error ~ 10 Km • 5 ns / m, or

link_delay_error ~ 50 μs

G.2.4.2.4 Unload Error

Another assumption that was made in the preceding discussions was that the value in the CSU ELS exactly represented the content of the server's counter at the time the most significant bit of that value was placed on the wire (see 24.3.4.4). If a given implementation of a server fails to achieve this, the result may be observed by the client as an error. Depending on the design, this error may contain both deterministic and non-deterministic errors. Non-deterministic errors may result, if the design is such that the CSU ELS frame is placed into a FIFO behind other frames. Since it is not known ahead of time what, if any, other frames are ahead of the CSU ELS in the FIFO, the errors may appear to be non-deterministic. Deterministic errors could result from a failure of the design to account for transmission delays from the time the value is taken from the counter until it actually appears on the wire.

It is possible to deal with the deterministic portion of unload error by simply defining it to not exist in a particular system. Note that the server's deterministic unload error affects all client clocks by the same amount. If all references to time in the system are made through client clocks (i.e., if no reference is made directly to the clock in the server), then one could simply define the objective standard to be the server's counter value plus the server's unload error as defined above. By this definition, there is no remaining deterministic unload error at the system level. One should still be conscious of the non-deterministic portion of the error that could be much larger than the deterministic portion.

Analysis:

The parameters used in this analysis are given in table G.4.

Table G.4 - Parameters used in analysis

Symbol	Definition
t_full_frame	Time to transmit a maximum-size Fibre Channel frame at full-speed Fibre Channel rate, including SOF, EOF, CRC, inter-frame gap, and Payload.
unload_error_D	The deterministic portion of the error caused by delays in the Clock Synchronization server logic between the time the counter value is read and the time the most significant bit of the clock count value in the CSU ELS frame is placed on the link.
unload_error_ND	The non-deterministic portion of the error caused by delays in the Clock Synchronization server logic between the time the counter value is read and the time the most significant bit of the clock count value in the CSU ELS frame is placed on the link.

There is very little useful analysis that may be done regarding the unload error outside the context of a specific design. However, that the non-deterministic component of the error has the potential to be very large if it is not addressed in the design of the server's logic. The CSU ELS frame might be queued up in the server's Transmit FIFO behind some number of maximum-length frames. If the other end of the link has no buffer space to receive frames (BB_Credit_CNT = BB_Credit), then additional delays may occur beyond that needed to transmit the frames ahead of the CSU ELS.

Example:

Without justification, assume that unload_error_D is equivalent to the transmission time of 5 full-speed Fibre Channel Transmission Words. Then

unload_error_D = 5 • 37.65 ns = 188 ns

Regarding the non-deterministic portion of the unload error, assume that the CSU frame does not bypass the Transmit FIFO. Also assume that the FIFO may hold up to four full-size Fibre Channel frames; and that the design of the server does not ensure the FIFO is empty when the CSU ELS frame is pushed onto the FIFO. Assume, however, that BB_Credit_CNT < BB_Credit so that no additional wait occurs beyond the time to transmit the frames in the FIFO. Then since

t_full_frame = ((15 + (2 112 / 4)) Transmission Words) • (37.65 ns / Transmission Word), or

t_full_frame ~ 20 μs

Then

unload_error_ND = t_full_frame • 3, or

unload_error_ND ~ 60 μs

G.2.4.2.5 Load Error

The link propagation delay error was discussed previously. That error dealt with the fact that the CSU ELS clock value was not updated as the ELS made its way from the server's transmitter to the client's receiver. But the client's clock synchronization counter is separated from its receiver by some amount of logic, the details of which depend on the specific design of the client. The time from the arrival of the CSU ELS at the client's receiver until the client's counter is updated is perceived by the client as an error. Similarly to the unload error discussed above, the load error may contain both deterministic and non-deterministic components.

Analysis:

The parameters used in this analysis are given in table G.5.

Table G.5 - Parameters used in analysis

Symbol	Definition
t_full_frame	Time to DMA a full Fibre Channel frame into host memory.
load_error_D	The deterministic portion of the error caused by delays in the Clock Synchronization client logic between the time the most significant bit of the clock count value in the CSU ELS frame is received from the link and the time that value is actually loaded into the client's counter.
load_error_ND	The non-deterministic portion of the error caused by delays in the Clock Synchronization client logic between the time the most significant bit of the clock count value in the CSU ELS frame is received from the link and the time that value is actually loaded into the client's counter.

There is little useful analysis that may be done regarding the unload error outside the context of a specific design. Figure G.3 indicated that the CSU ELS frame went directly from the CRC/Validation logic into the client's clock synchronization circuitry. If instead, the frame may languish in the Receive FIFO, the non-deterministic portion of load error could become fairly large.

Example:

Without justification, assume the deterministic portion of load error is on the order of the time to transmit 6 full-speed Fibre Channel Transmission Words. Then

load_error_D = 6 • 37.65 ns ~ 226 ns

Regarding the non-deterministic portion of the load error, assume that the CSU frame does not bypass the Receive FIFO. Also assume that the FIFO may hold up to four full-size Fibre Channel frames. Arbitrarily assume that the design of the client logic is such that it may empty the FIFO exactly as fast as the link fills it. Then by assumption,

t_full_frame ~ 20 μs

Then

load_error_ND = t_full_frame • 3, or

load_error_ND ~ 60 μs

G.2.4.2.6 R/T Clock Domain Error

As defined above, the R/T clock domain error is actually a component of the load error. It is dealt with separately because of its unique nature. It is a non-deterministic error that arises from the assumed fact that not all of the logic in the client's port operates from the same clock oscillator. It is assumed that most of the logic is operated from the same oscillator that drives the transmitter. But there is a small amount that is operated from the clock recovered from the received serial bit stream. Specifically, the deserialize/decode logic and the front end of the elasticity buffer of Figure G.3 are assumed to operate from the recovered clock. Passing information from one clock domain to another requires re-synchronizing to the receiving domain's clock. Standard methods for accomplishing this generally result in a delay of 1-2 cycles of the receiving domain's clock. This difference (i.e., zero to one cycle of the receiving domain's clock) is non-deterministic. The R/T Clock Domain Error may be treated as a deterministic delay of one-and-a-half clock cycles, and a non-deterministic value of ± one-half of a clock cycle.

Analysis:

The parameters used in this analysis are given in table G.6.

Table G.6 - Parameters used in analysis

Symbol	Definition
logic_clk_period	The period of the clock that drives the logic in which the client's clock synchronization counter resides.
clk_domain_error_D	The deterministic portion of the client clock error due to crossing between the receiver clock domain and the clock domain in which the client's clock synchronization counter resides.
clk_domain_error_ND	The non-deterministic portion of the client clock error due to crossing between the receiver clock domain and the clock domain in which the client's clock synchronization counter resides.

Using the assumptions stated in the preceding discussion,

clk_domain_error_D = 1.5 • logic_clk_period, and

clk_domain_error_ND = 0.5 • logic_clk_period

Example:

Assume that the logic_clk_period is the same as the time to transmit one Fibre Channel Transmission Word. i.e.,

Assume logic_clk_period = (40 bits / (1.0625 • 10^9 bits/sec)) = 37.56 ns. Then

clk_domain_error_D = 56 ns, and

clk_domain_error_ND = 19 ns

G.2.4.2.7 Server Oscillator Error

An assumption in the preceding discussions is that the server's oscillator frequency is correct by definition. Recall that the stated goal of the clock synchronization service is to faithfully reproduce at each client node, an exact copy of the server's counter that is counting cycles of the server's oscillator. If the goal is, instead, to provide each client with a value that represents some other, independent clock value, then the extent to which the server's oscillator fails to match the update rate of that other clock is seen as another error. A discussion of this error is outside the scope of this annex.

G.2.4.3 Techniques for Reducing Deterministic Errors

G.2.4.3.1 A Fix for Differences in Oscillator Frequencies

Shown in figure G.8 is a model of logic that could be used in place of figure G.5 to correct for errors due to the difference in the frequency of the client's oscillator as compared to that of the server. This figure is intended as a model only, not as a specific implementation (e.g., multipliers and dividers may take up a considerable amount of logic, and may be replaced by an appropriate series of adds; or by some techniques such as skipping counts (if the client's oscillator is too fast), or inserting counts (if the client's oscillator is too slow)).

In the figure, it is assumed that the counter is simply set to zero upon receipt of the CSU ELS frame, rather than being loaded with the value in the CSU ELS. At that same time, the value from the CSU ELS frame is captured in the ELS_value_n register, the previous value from the ELS_value_n register is captured in the ELS_value_{n-1} register, and the value in the counter just prior to its being reset is captured in the $ELS\_arrived_{n-1}$ register. These values are then used as shown in the figure to calculate the client's local clock value.

Figure G.9 shows a minimal set of hardware assists needed to implement the model of figure G.8. Upon the receipt of the CSU ELS, host software would read the ELS_value_n and $ELS\_arrived_{n-1}$ registers. Since the ELS_value_{n-1} register is nothing more than the old value of the ELS_value_n register, host software would maintain this value internally. The calculation of the $Adjustment_n$ factor and the corrected valued used by client would be calculated by host software using the algorithms indicated in figure G.8.

The Raw Time Tag tuple from the ELS_value_n register is shown in the figure as being available directly, and not going through the host bus interface. This is to emphasize the problem in allowing software delays to corrupt the attachment of the time tag value to data sets. The implication of the figure is that the Raw Time Tag value would be available directly to some hardware that could attach the value directly to the data set with minimal delay. A simple addition of the counter value to the ELS_value_n value would result in an unadjusted, non-monotonic time value as shown in figure G.7. But for more accurate results, host software could apply the adjustment factor from figure G.8.

Moving the calculation of the adjustment factor to software has additional benefits. The model of figure G.8 implicitly assumes that the only error involved is that due to differences in the oscillator frequencies of the server and its clients. In a real implementation, of course, all of the sources of error contributes to the total error. The host software algorithms may apply filtering algorithms to the data in addition to simply calculating the adjustment factor. This results in better estimates of the true value of the clock.

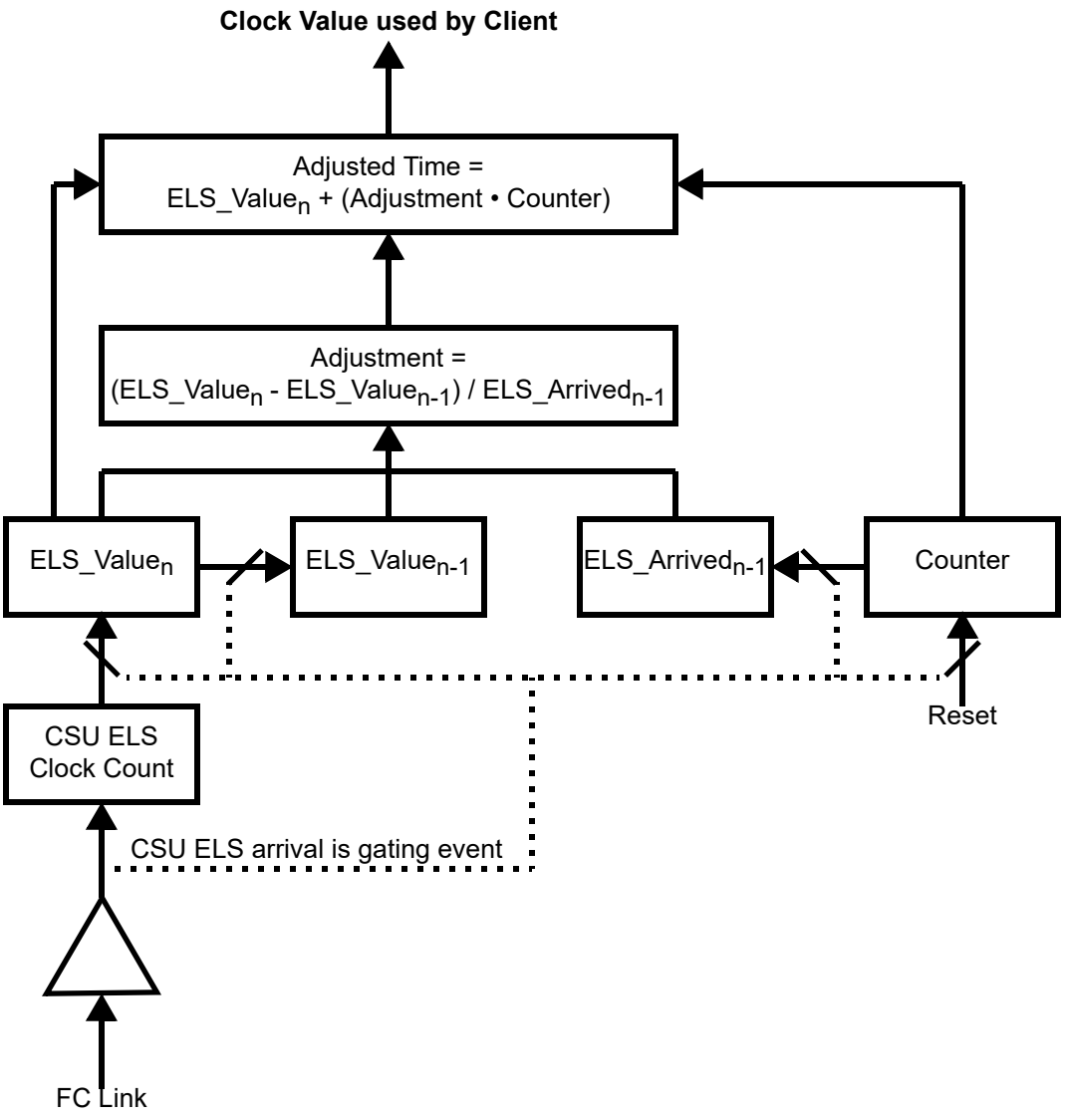

Figure G.8 - Client Clock Sync Logic Model (Rate Adjusted)

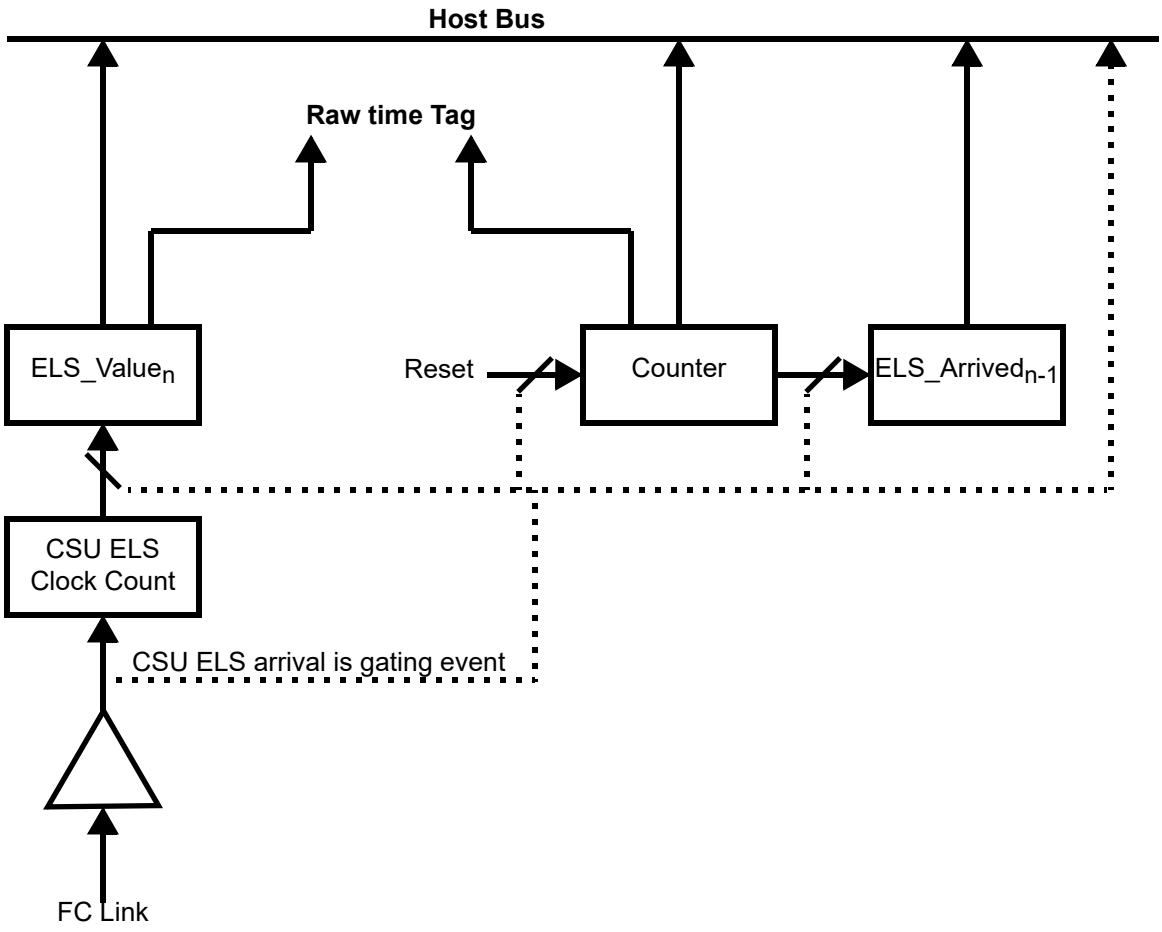

Figure G.9 - Rate Adjustment Hardware Assists for Client Clock Sync

G.2.4.3.2 A Fix for Link Propagation Delay Error

Simply adding it to the value received in the CSU ELS frame may compensate for the deterministic portion of the link propagation delay error (see figure G.10).

G.2.4.3.3 A Fix for Load Error

The fix for link propagation delay error may also be used to correct the deterministic portion of the load error by simply replacing the link propagation delay error in figure G.10 by the load error. Of course, both errors may be corrected simultaneously by simply adding them together before applying them to the adder.

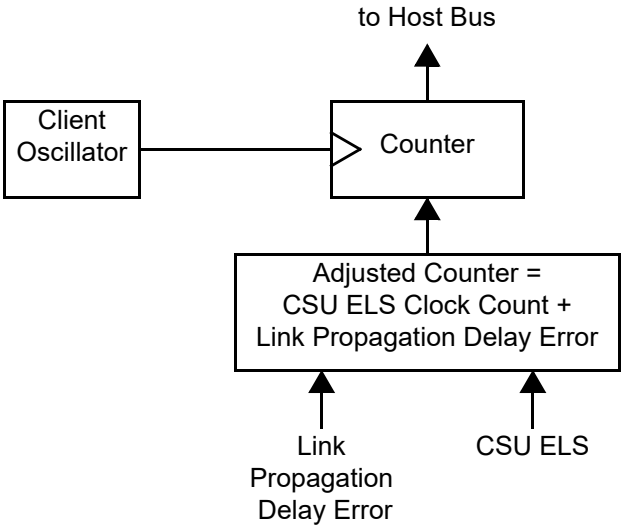

Figure G.10 - Client Clock Sync Implementation (Link Delay Fix)

G.2.4.3.4 A Fix for Unload Error

G.2.5.2.3 indicated that it was possible under some conditions to define the deterministic portion of the unload error into non-existence. If this is not possible or desirable for some system, another approach for correcting it is shown in figure G.11. If this fix is combined with that of G.2.4.3.2 (i.e., the fix for link propagation delay error), the two adders are in series. While it would be possible to combine the two adders by combining the Load Error of the client with the Unload Error of the server, this is not recommended. Doing so would violate the concept of information hiding and would also violate at least the spirit of the standard, since the standard requires that the value in the CSU ELS correctly represent the time in the server's clock as the CSU ELS exits the server port.

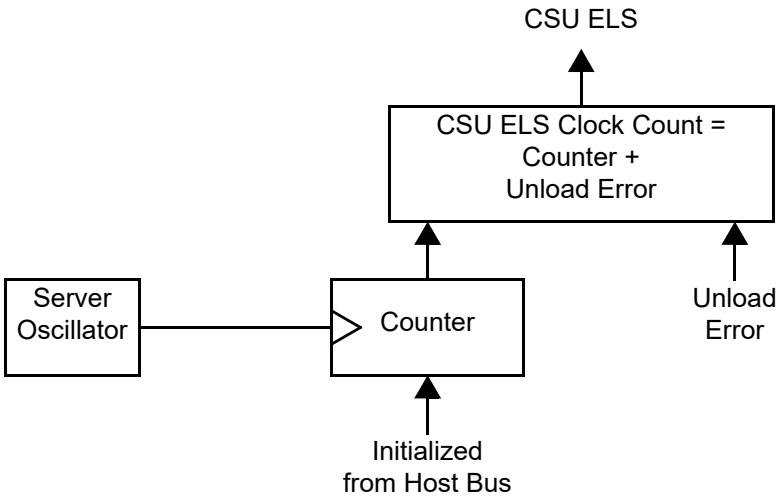

Figure G.11 - Server Clock Sync Implementation (Unload Error Fix)

G.2.4.4 Dealing With Non-Deterministic Error

On the server side, the fix for the non-deterministic component of unload error is to eliminate as many sources of non-deterministic delay as possible. Some design elements to consider include the following:

a) transmit FIFO control. Assuming that the CSU ELS frame is entered into the Transmit FIFO of Figure G.2, ensure that the FIFO is empty at the time the Clock Count value is pushed onto the FIFO; and
b) BB_Credit. Before the CSU ELS frame is entered into the Transmit FIFO, ensure that BB_Credit_CNT is less than BB_Credit. This ensures that the frame may be transmitted onto the link without delay.

On the client side, a design element to consider is special CSU frame handling. The CSU ELS frame has a unique R_CTL Information Category value. This may be of use in quickly recognizing the incoming CSU frame so that it be given special handling (e.g., bypassing the normal Receive FIFO).

On either the server or the client side, a design element to consider is priority. One could use high priority for minimizing delays in processing the CSU ELS frame.

G.2.4.5 Dealing With Non-Monotonicity

As discussed in G.2.4.2, if the client oscillator frequency error is not corrected, the client's counter may be set to an earlier time value when the CSU ELS is received. If the proposed fix for this error source is not implemented, it may still be desirable to have a monotonically increasing client clock value in order to avoid difficulties with some algorithms that use that value. If the client's oscillator is slower than that of the server, non-monotonicity does not occur -- the value of the client's counter jumps when the CSU ELS is received, but the jump is in the positive direction. So the problem only occurs when the client's oscillator is faster than that of the server. In this case, when the CSU ELS is received, rather than simply loading the CSU

ELS value into the counter as was done in figure G.5 and continuing to count from there, one could stop the counter for a number of clock cycles. The number of cycles to stop could be calculated as the difference between the client counter value at the time the CSU ELS is received, and the value in the CSU ELS. The result of this would be as shown figure G.12.

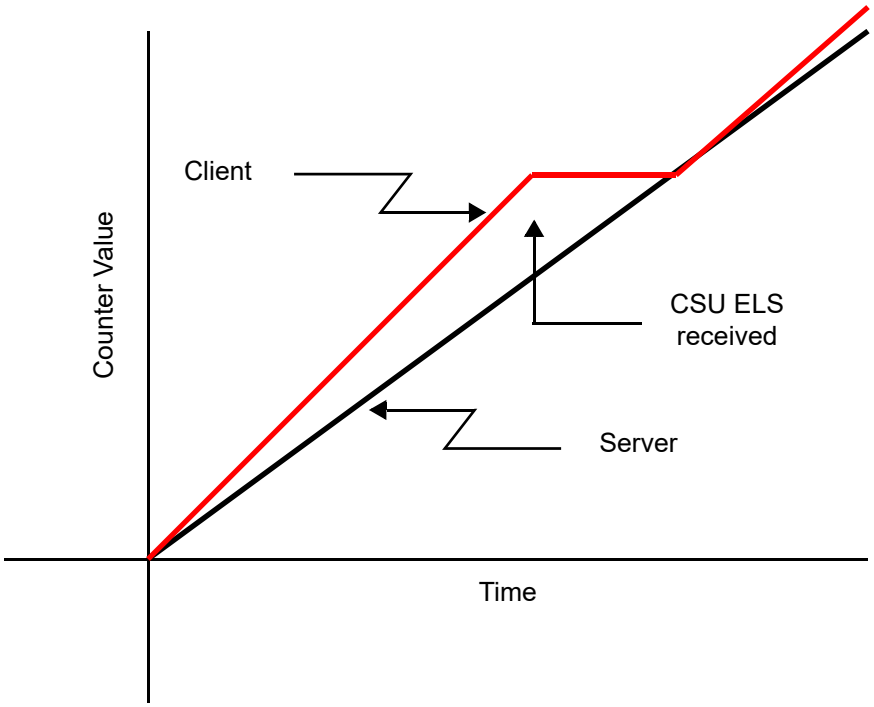

Figure G.12 - Client Clock Drift (Monotonic)

G.2.5 Fabric Considerations

G.2.5.1 Introduction

For reference, figure G.13 reproduces the model from 24.3 for the Clock Synchronization Service in a Fabric-based system. Note that for purposes of this discussion, we have exercised the option for the Fabric to have its own counter and update the value in the Payload of the outgoing CSU frame. This is the basis for the discussions in the sub-clauses that follow. In order to illustrate more of the possible sources of error, the discussions assume that the Clock Sync Server is implemented in a separate node outside of any switch element in the Fabric. It should be noted, however, that implementing this server inside of the Fabric might allow for eliminating some of these errors altogether. For simplicity, a single-switch Fabric is assumed in all of the examples.

The insertion of the Fabric between the server and the client results in additional errors being introduced into the client's counter. In terms of error analysis, the Fabric acts as a client of the server, and as a server to the ultimate client.

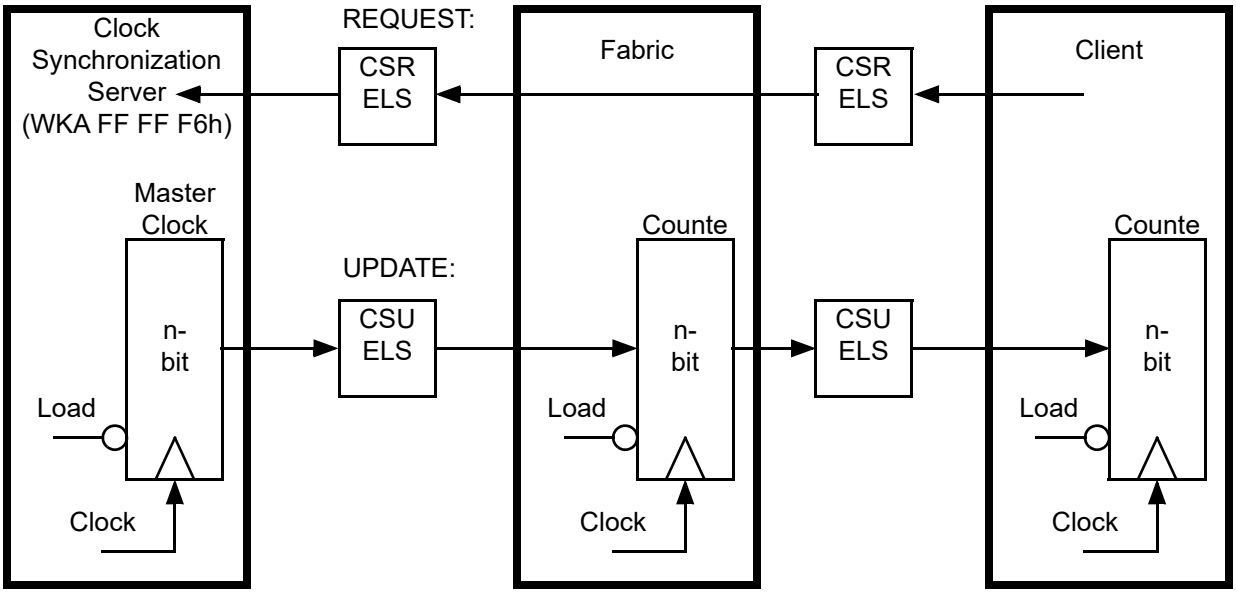

Figure G.13 - ELS Clock Sync Model – Fabric

G.2.5.2 Discussion of Errors

The general nature of these errors is the same as discussed in G.2.4.2. Here, we discuss only the differences between the point-to-point case and the Fabric case.

G.2.5.2.1 Client Oscillator Frequency Error

In the Fabric case, there are at least two oscillators that may introduce errors -- the one in the ultimate client, and the one in the Fabric, in its role as a client. For the best results, both errors should be considered. The design of the specific Fabric in question should be analyzed to determine the exact number of oscillators in the Fabric that need to be considered.

Fabric oscillator(s) only affect the end result for the period of time between the arrival of the CSU ELS at the Fabric (from the original server), and the time the Fabric sends the CSU ELS to the ultimate client. In a well-designed system, this time is very small, and the resulting error may be ignored.

Analysis:

The parameters used in this analysis are given in table G.7.

Table G.7 - Parameters used in analysis

Symbol	Definition
T_CSU_Fabric	The time between receipt of a CSU ELS frame by the Fabric and the time it transmits the CSU ELS frame to the ultimate client.
f_server	The frequency of the oscillator in the Clock Synchronization server.
f_fabric	The frequency of the oscillator in the Fabric.
f_tol	The allowed tolerance of the Fibre Channel transmission frequency in either direction from the nominal frequency.
f_nom	The nominal frequency of Fibre Channel transmission.
freq_error_fabric	The maximum client clock error due to mismatch of Fabric vs. server oscillator frequencies.

The error accumulates during the time the CSU ELS frame is resident in the Fabric. This error is in addition to the similar error that occurs at the client for the time between CSU ELS frames. Specifically,

freq_error_fabric = T_CSU_Fabric • [f_fabric / f_server] - T_CSU_Fabric

The worst mismatch occurs when one oscillator is at the fast end of the allowable range, and the other is at the slow end. So assume that:

f_fabric = f_nom • (1 + f_tol), and

f_server = f_nom • (1 - f_tol)

Then, since f_tol = 100 ppm,

freq_error_fabric ~ T_CSU_Fabric • $(2 \cdot 10^{-4})$

Another way to look at this is that the worst case total error due to both Fabric and Client oscillator frequency differences (as compared to the Server) is:

freq_error_total = freq_error + freq_error_fabric, or

freq_error_total = (T_CSU + T_CSU_Fabric) • $(2 \cdot 10^{-4})$

An example is given in table G.8.

Table G.8 - Example of analysis results

T_CSU_Fabric	freq_error_fabric
80 µs	16 ns
320 µs	64 ns

Note that even with these rather large values of T_CSU_Fabric this component is quite small compared to T_CSU that was calculated in G.2.4.2.2 and may therefore be ignored.

G.2.5.2.2 Link Propagation Delay Error

In the case of the Fabric, there are two links that contribute to the error (i.e., one from the original server to the Fabric, and one from the Fabric to the ultimate client). These errors should be commensurate with each other.

G.2.5.2.3 Unload Error

There are two sources of unload error (i.e., one in the original server, and one in the Fabric as it acts as a server for the ultimate client). These errors should be commensurate with each other.

Caution should be used when ignoring the deterministic portion of unload error. The unload error associated with the server itself may still be ignored. The unload error associated with the Fabric may only be ignored if it is known that the path from the server to each client goes through the same number of Fabric elements; and that the Fabric elements all have identical unload errors. If this is true, though, the unload error of the Fabric may be treated the same as that of the server.

The considerations of G.2.4.3.4 may be applied to lessen the non-deterministic portion of unload error in the Fabric.

Analysis:

The presence of the Fabric has two potential effects. First, and most obviously, the circuitry in the Fabric that maintains the counter and that acts as the surrogate server for the client, has its own unload error. This error simply adds to the unload error of the original Server. Secondly, contention in the Fabric may affect the unload error of the original Server if care is not taken in the design of the Server. Specifically, if the Server design takes the value from the counter and puts it in the CSU ELS frame before ensuring that the BB_Credit_CNT is less than BB_Credit, then contention in the Fabric causes a delay in getting the CSU ELS onto the wire. This increases the Server's unload error.

Example:

Regarding the non-deterministic portion of the unload error, assume in the Fabric case that the Transmit FIFO may hold up to four full-size Fibre Channel frames; and that the design of the server does not ensure the FIFO is empty when the CSU ELS frame is pushed onto the FIFO. Again without justification, assume that each of the frames (including the CSU ELS frame) waits for delivery of, say, four full-size Fibre Channel frames before it receives BB_Credit so that it may proceed. Then since

t_full_frame = ((15 + (2 112 / 4)) Transmission Words) • (37.65 ns / Transmission Word), or

t_full_frame ~ 20 μs

Then

unload_error_ND = t_full_frame • (3 • (4+1) + (4)), or

unload_error_ND ~ 380 μs

G.2.5.2.4 Load Error

There are two sources of load error (i.e., one in the ultimate client, and one in the Fabric as it acts as a client of the original server). These errors should be commensurate with each other.

G.2.5.2.5 R/T Clock Domain Error

The Fabric may contain internal clock boundaries that are crossed as the CSU ELS information passes through the Fabric. The number of such crossings depends on the internal design of the Fabric.

G.2.5.2.6 Server Oscillator Error

The effect of the Fabric oscillator frequency is included as part of the client oscillator frequency error (see G.2.5.2.1).

G.2.5.3 Fixes for Fabric Errors

Since the nature of the errors introduced by the Fabric is the same as those discussed in the point-to-point case, the same fixes may be applied to the design of the Fabric.

It should be emphasized that 24.3.3.3 includes rules for Fabrics that are designed to minimize the effect of delays through the Fabric. The Fabric maintains its own counter. It loads this counter with the value received in the incoming CSU ELS frame. When the CSU frame is to be forwarded on the Client link, the Fabric modifies the CSU frame to contain the current value from the counter in the Fabric. If these rules are followed, the effect of delay through the Fabric is essentially eliminated.

G.2.6 Loop Considerations

G.2.6.1 Introduction

For reference, figure G.14 reproduces the model from 24.3.4 for the Clock Synchronization Service in a Loop-based system. This is the basis for the discussions in the sub-clauses that follow.

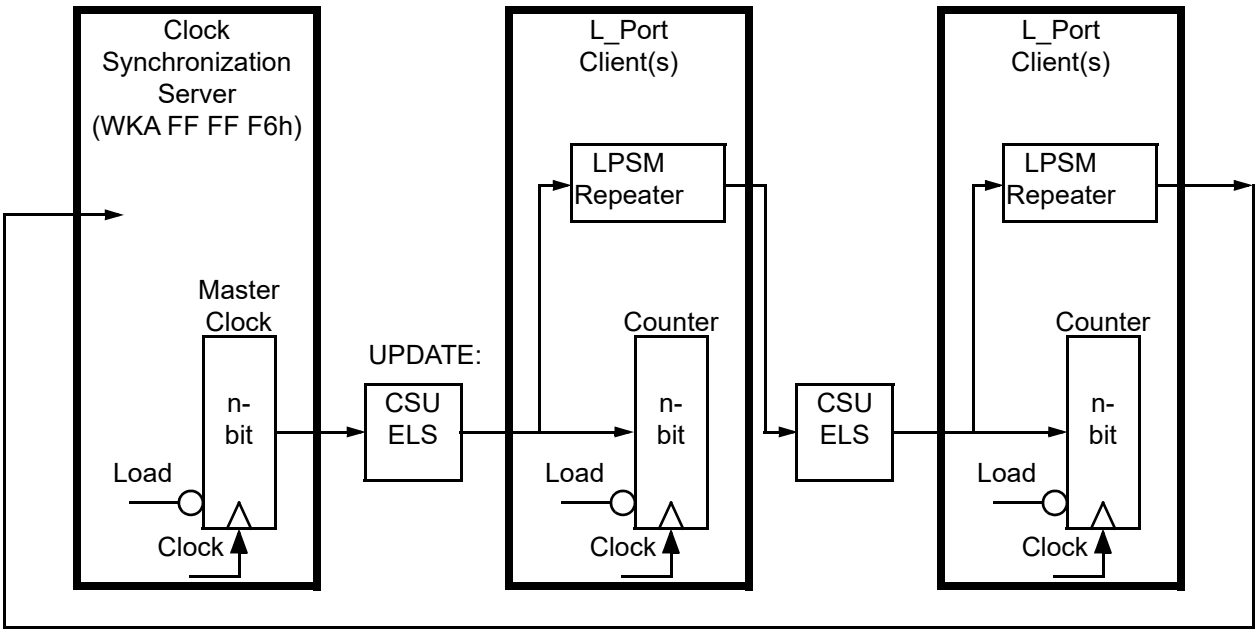

Figure G.14 - ELS Clock Sync Model – Loop

The diagram assumes that one of the L_Ports acts as the server while the other nodes on the Loop are clients. However, there is no requirement that all nodes on the loop be clients. The insertion of n L_Ports between the server and the client(s) results in additional errors being introduced into the client's counter. In terms of error analysis, it doesn't matter if the nodes between the server and a given client are clients or not since the delay through the LPSM repeater is the same.

G.2.6.2 Discussion of Errors

G.2.6.3 Introduction

The general nature of these errors is the same as discussed in G.2.4.2, but only the differences between the point-to-point case and the loop case are discussed. One unique aspect of the loop configuration is the delay that occurs as Transmission Words are passed from one node to the next (i.e., node delay) (see G.2.6.3.1).

G.2.6.3.1 Node Delay

The Arbitrated Loop standard (FC-AL-2) allows up to 6 Transmission Word times to elapse between the time a Transmission Word is received until it is forwarded on to the next node in the loop. This delay is largely deterministic. There is a non-deterministic component of the error due to clock skew management.

Analysis:

The parameters used in this analysis are given in table G.9.

Table G.9 - Parameters used in analysis

Symbol	Definition
node_delay_error_D	The deterministic portion of the error caused by the fact that the Clock Count value in the CSU ELS frame is not updated as the frame is passed from one node to the next.
node_delay_error_ND	The non-deterministic portion of the error caused by the fact that the Clock Count value in the CSU ELS frame is not updated as the frame is passed from one node to the next.

Example:

In order to calculate the cumulative deterministic node delay, the system designer needs to know the number and type of nodes that lie between the server and the client. This is different for each client on the loop.

Assume there are 5 nodes from Vendor A and 5 nodes from Vendor B between the server and the client. Also assume the specific node delays are as follows:

Vendor_A_node_delay = 6 Transmission Word times

Vendor_B_node_delay = 5 Transmission Word times

Then the deterministic node delay is as follows:

node_delay_error_D = 5 • Vendor_A_node_delay + 5 • Vendor_B_node_delay

node_delay_error_D = 5 • (6 • 37.65 ns) + 5 • (5 • 37.65 ns)

node_delay_error_D = 2.07 microseconds

For estimating the non-deterministic error, consider the discussion in FC-AL-2 concerning L_Port Elasticity buffer management, which requires that no more than 4 Transmission Words are deleted between frames. Using this assumption, the worst case non-deterministic error would be:

node_delay_error_ND = 4 • 37.56 ns

node_delay_error_ND = 150.24 ns

This shows that even under worst case conditions the non-deterministic node delay error is small compared to the deterministic error, depending on the size of the loop. The larger the loop the smaller the error is.

G.2.6.3.2 Client Oscillator Frequency Error

This error is the same as discussed in G.2.4.2.2. Only the server's oscillator and the oscillator of the client under consideration need to be considered. The effect of oscillators in other nodes is considered as part of the non-deterministic component of node delay error.

G.2.6.3.3 Link Propagation Delay Error

The nature of this error is the same as discussed in G.2.4.2.3. In the case of the loop, of course, the number of links to consider is generally larger. The links to consider are all of the links that lie between the server's transmitter and the client’s receiver, which is different for each client on the loop.

G.2.6.3.4 Unload Error

This error is the same as discussed in G.2.4.2.4. Even in the loop configuration, there is only one unload error that is due to the server. There is no unload error in intermediate nodes because the counter value is simply transferred from input to output without being loaded into a counter and then unloaded from the counter.

G.2.6.3.5 Load Error

This error is the same as discussed in G.2.4.2.5. Even in the loop configuration, there is only one load error that applies to any given client. That is the load error in that client. There is no load error in intermediate nodes because the counter value is simply transferred from input to output without being loaded into a counter and then unloaded from the counter.

G.2.6.3.6 R/T Clock Domain Error

This error is the same as discussed in G.2.4.2.6. Even in the loop configuration, there is only one R/T clock domain error that applies to any given client. That is the R/T clock domain error in that client. The effect of clock domain crossings in other nodes is considered as part of the non-deterministic component of node delay error.

G.2.6.3.7 Server Oscillator Error

The Loop does not introduce any additional errors in this area.

G.2.6.4 Fixes for Loop Errors

Since the nature of the errors introduced in a loop is generally the same as those discussed in the point-to-point or Fabric cases, the same fixes may be applied to the design of the loop.

There is one source of error that is unique to loops, that being the node delay. The deterministic portion of the node delay error may be subtracted out at the client, as was done for other deterministic errors. Another approach to minimizing node delay error is to position the most time-sensitive nodes as close as possible to the server (on the downstream side).

G.3 An Example

Figure G.15 shows a hypothetical example of the application of clock synchronization to a tactical avionics system. The system contains two independent sensor subsystems, a processing subsystem, and a weapon delivery subsystem. The sensor subsystems receive energy from their environment, convert it to a series of digital samples, and send the sample set to the processing subsystem. Based on the combined information from the two sensor subsystems, the processing subsystem determines whether potential targets are present and if so, their tracking information. This data is presented to the pilot. The processing subsystem then computes data for attacking a target identified by the pilot. This data is sent to the weapon delivery subsystem that causes the weapon to be targeted and released at the appropriate time for accurate delivery.

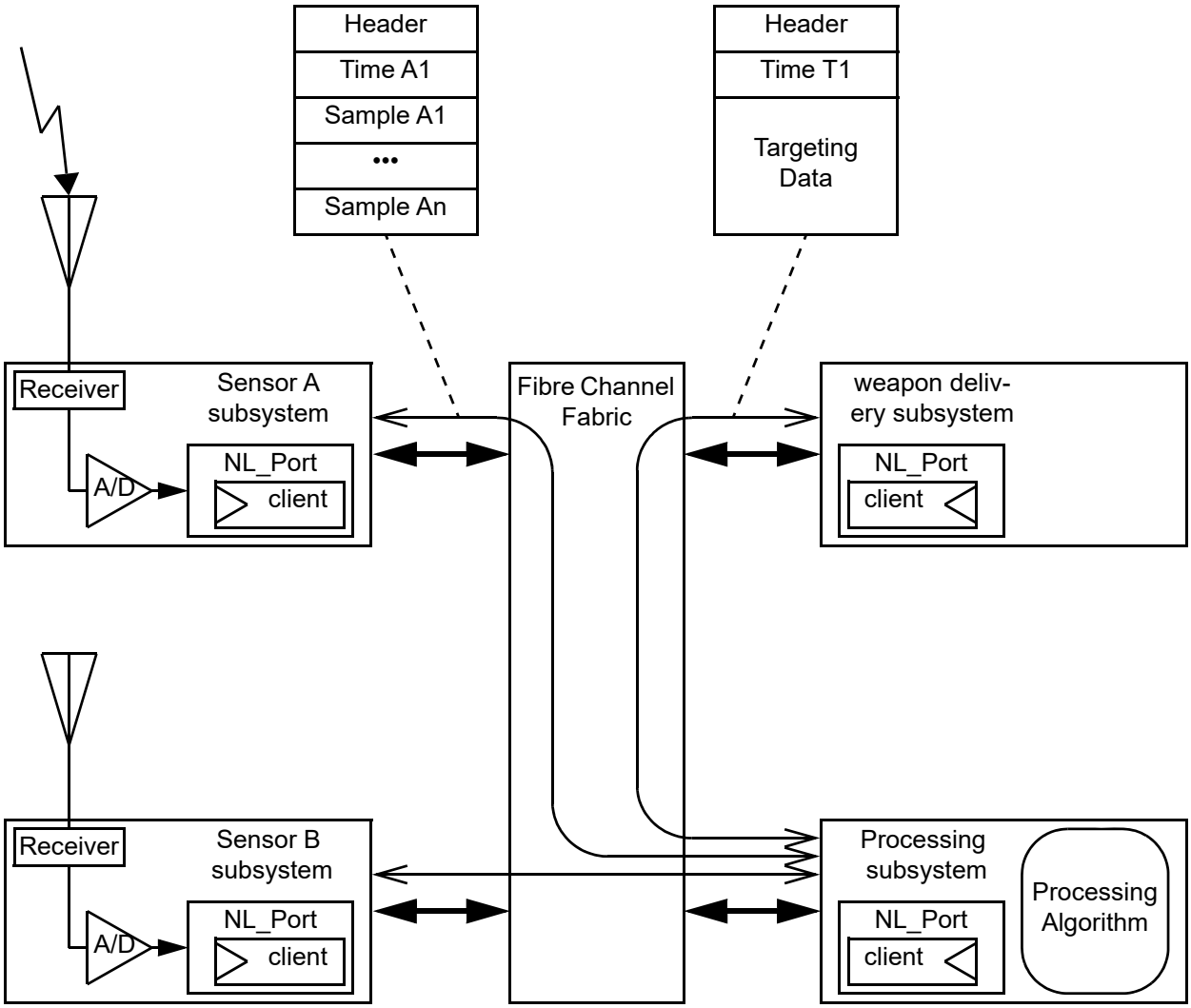

Figure G.15 - Application of Clock Synchronization to Tactical Avionics

The figure does not explicitly show the Clock Synchronization server. Each of the four subsystems, though, is presumed to be a client of the same server so that they share a common sense of time.

The sensor subsystems attach a time tag (i.e., Time A1, Time B1) to the set of digitized samples from their respective receivers. Assuming that successive samples in a data set are taken at regular intervals, tagging the data set with the time of arrival of the energy at the sensor for the first sample allows the determination of the time of arrival of all samples in the set.

The information available to the algorithm in the processing subsystem includes:

a) digitized samples of the energy received at Sensor A;
b) the time of arrival of the sampled energy at Sensor A;

c) Characteristics of Sensor A, including the orientation of the receiving aperture;
d) Digitized samples of the energy received at Sensor B;
e) The time of arrival of the sampled energy at Sensor B;
f) Characteristics of Sensor B, including the orientation of the receiving aperture; and
g) The current time.

Note that once the time tag has been attached to the samples by the sensor subsystems, the processing subsystem has no need to further tag them (e.g., it is not necessary for it to note the time at which the frames containing the samples arrived at its FL_Port). What is important is the time at which the energy from potential targets arrived at the sensors. The current time may be important so that the processing subsystem does not present stale data to the pilot. It is also important so that any computed targeting information be prepared for a time that is still in the future (i.e., It would do little good to tell the weapon delivery subsystem what it should have done at some time in the past). The sense of shared time between the processing subsystem and the weapon delivery subsystem ensures that the weapon is triggered at the time most appropriate for precise delivery of the weapon.

In this example, the critical associations of time and data occur in the sensor subsystems and in the weapon delivery subsystem. If software is involved in reading the time counter and attaching it to a data set, the accuracy of the time tag may be worse by at least one, and probably two orders of magnitude as compared to a hardware-based time tagging. So for maximum precision, the sensor subsystems would use hardware to capture a time value from the counter at the precise time that the sample comes from the analog-to-digital converter (i.e., even greater inaccuracy would result if the samples were to travel through the Fabric and be time-tagged when they arrive at the processing subsystem).

Similarly, in the weapon delivery subsystem, the actual triggering of the weapon would be accomplished by hardware directly linked to the synchronized time counter.

In contrast to these considerations, the software in the processing subsystem has a more relaxed need for knowledge of time. Its primary need is to ensure that the information it presents to the pilot represents the current situation; and that the targeting data that it computes for the weapon delivery subsystem is for some time in the future. But the time that is used in the algorithm itself as part of the interpretation of the sample data is the time attached to that data by the sensor subsystems. So the processing subsystem probably has no need for a direct hardware-based tagging of information.

As a final comment, if the adjustment for oscillator frequencies (see G.2.4.3) is desired, but the sensor nodes have no embedded processor to apply the adjustment factors, the simple Time A1 value indicated in figure G.15 could be replaced by the following tuple:

a) counter;
b) ELS_value $_{n}$;
c) ELS_value $_{n-1}$; and
d) ELS_arrived $_{n-1}$.

Of course, the hardware in the sensor that attaches this tuple to the data set should be able to do an atomic reading of all components of the tuple so that values in the tuple are coherent.

Algorithms in the processing subsystem could then apply the adjustment algorithms separately for each sensor before using the time tag in its tracking and targeting algorithms.

Annex H
(informative)
Speed negotiation details

H.1 Scope

This annex contains supplementary information on the goals, assumptions, and methodology for the design of the speed negotiation algorithm specified in clause 8 of this standard.

H.2 Basic assumptions

The speed negotiation method is based on the following set of assumptions:

a) the objective is to find the highest common speed that actually operates for all elements in the Fibre Channel link involved in the speed negotiation.

   Functionality is demanded from the entire link at the speed selected including all cables, connectors, hubs, transceivers, Serdes, and conversion devices. The design capabilities of the components are not sufficient criteria for acceptance – actual hardware is required to perform;

b) error free Transmission Word Synchronization for 1 000 Transmission Word times is an adequate quality measure for speed negotiation purposes. This is not the same as verifying operation at the Fibre Channel bit error rate;

c) link quality issues detected after the speed has been determined are addressed by other means;

d) once a speed has been negotiated, it is permissible that the speed not be changed after conditions are improved such that operation at a higher speed would now be possible. Forcing a re-negotiation is done with higher level protocols or out-of-band;

e) speed negotiation concludes promptly unless it is physically impossible for any common speed to exist;

f) only point-to-point topology is supported.

   Loop configurations that negotiate speeds are assumed to present a single port to the other negotiating port for speed negotiation purposes;

g) ports capable of speed negotiation are not required to support a common 1Gbits/second speed;

h) the transmitter and receiver of a port are assumed to be capable of working at different speeds at the same time during speed negotiation;

i) a port is assumed to negotiate among up to a maximum of any four speeds;

j) the speed negotiation method is independent of and compatible with the link protocol (e.g., operating, or not operating in Arbitrated Loop topology);

k) the same speed negotiation method supports both copper and optical ports;

l) the algorithm is realizable in a host driver or in port firmware;

m) the algorithm assumes loop infrastructure (e.g., hub) that has a port attachment scheme that supports sensing of the operating speed of the infrastructure by the attaching port receiver. This port attachment scheme prevents the attaching port transmitter from connecting into the existing infrastructure unless the proper speed is established;

n) as an option to negotiating each hub port per the algorithm, multiple speed hubs may be set to a single speed during speed negotiation by some out-of-band means;

o) connection of Speed Negotiating ports to an operating set of devices does not disrupt the operation of those devices unless the ports being connected are transmitting at their speed;

p) once a particular speed has been established speed negotiation is not attempted again unless a LINK FAILURE is detected or by means outside the scope of this standard;

q) the algorithm supports speed determination by ports attached to ports that operate only at any single speed or with loops that have been set to a single speed by means not specified in this standard; and

r) speed negotiation completes within 2.6 s. If the speed negotiation does not complete within 2.6 s no common speed exists.

   Speed negotiation usually completes in less than 1 s if there is any speed common among both ports and the cable plant. The full 2.6 s may be required in the following cases:

   A) where the slow-wait stage is used; or

   B) special cases when both ports are negotiating and only the lowest (common) speed is supported by the cable plant.

H.3 Supported configuration

There are three cases supported by the algorithm as shown in table H.1.

Table H.1 - Three configurations supported by the speed negotiation requirements

Negotiating Port	**Case 1:** Negotiating Ports include hub ports with intelligence to support the negotiation algorithm at each hub port separately	Negotiating Port
Negotiating Port	**Case 2:** Fixed speed Ports include legacy1Gbits/s repeating hubs, fixed speed hubs at any speed, and loop enclosures (JBOD)	Fixed Speed Port
Fixed Speed Port	**Case 3:** Works if the speeds match or does not work at all -- no negotiation involved in this case	Fixed Speed Port

Speed negotiation is defined only between directly connected pairs of ports. This means that multi port entities (e.g., hubs and JBODs) have significant restrictions when used with the speed negotiation algorithm. Specifically, hub ports either are assumed to be capable of executing the speed negotiation algorithm independently for every hub port or the hub speed is fixed at the same value for all ports. For JBODs the entire enclosure is assumed to be presented to the attached loop port as a single speed negotiating loop port or the entire population of devices within the JBOD enclosure is assumed to be fixed speed.

H.4 Derivation of timing requirements and characteristics

H.4.1 Introduction and diagram conventions

In this subclause the derivation of the timing requirements is shown. The derivations used in this subclause may not be mathematically rigorous for some parameters. They do, however, represent the best engineering judgment available and have been borne out by extensive simulations.

The examples in H.4 attempt to describe extreme cases for the timing parameters and as such involve marginal conditions and timings.

The timing diagrams in H.4 use the notational conventions listed here:

a) each number represents a speed (SP#). x represents a speed other than the incoming speed (states 26, 27, etc.);
b) letters represent major stages or modes of the algorithm. Different type case is used for the different stages to enable easier graphical visualization;
c) some timing examples show approximate timing and may not exactly match the numerical values;
d) w indicates Wait_for_signal stage; s indicates Slow_wait stage; M indicates Negotiate_master stage; F indicates Negotiate_follow stage; n indicates Normal operation;
e) **Bold/underline** indicates a successful result from a Pass sync_test (>1 000 error free Transmission Words, etc.);
f) Underline without bold indicates just missing passing a Pass sync_test for any reason; and
g) *Italics* indicates legacy hub disruption between cable connection and completion of algorithm.

Time values a) through e) are used in the graphical and analytical explanations. The derivation of these values follows:

a) 30 ms = t_rxcycl (max) (see table 28);
b) 184 ms = t_txcycl + t_rcycl (max). This is maximum duration of a transmit speed in Wait_for_signal;
c) 156 ms = t_txcycl + t_rxcycl (min). This is the minimum duration of a transmit speed in Negotiate_master;
d) 214 ms = t_txcycl + 2 • t_rxcycl (max). This is the maximum duration of a transmit speed in Negotiate_master; and
e) 247 ms = t_stbl + t_rcycl (max). This is the maximum length of time a port transmits at a single speed in Negotiate_follow while receiving a stable input signal.

These are examples. Other configurations and/or sequencing may lead to the same results.

H.4.2 Receiver cycle time, t_rxcycl

The minimum for this timing value is 2 ms that allows receiver stabilization time plus margin. The maximum is 30 ms that allows for responsiveness of the current generation of firmware implementations.

H.4.3 Master transmitter cycle time, t_txcycl

= 5 • (t_rxcycl (max) + n • (100 μs)) + (Transmitter Stabilization Time) + margin

= 5 • (30.2 ms - .2 • (Transmitter Stabilization Time) + 5 • (100 μs)) + (Transmitter Stabilization Time) + .5 ms

= 151 ms - (Transmitter Stabilization Time) + 2500 μs + (Transmitter Stabilization Time) + .5 ms

= 154 ms

5 comes from Negotiate_master wherein 4 speeds + the transmit speed is tested in block 27. n represents the number of blocks while cycling around block 21 in Negotiate_master: n = 5 because the sequence through state 24, state 25, state 23, state 2C, and state 22 represents the maximum delay path.

H.4.4 Speed stability time, t_stbl

t_stbl is designed to be of sufficient duration to ensure that the other transmitter is no longer changing speeds. The maximum transmitter speed duration occurs in Negotiate_master. T_stbl is found by adding the time required to execute State 23 and State 27. A safety factor (3ms) is added to ensure that the tolerances in executing State 23 and State 27 do not allow ambiguity. The execution time for State 23 is found by adding t_txcycl (154 ms) to the maximum t_rxcycl (30 ms). An additional maximum t_rxcycl (30 ms) execution time is added by state 27. Therefore:

t_stbl = 154 ms + 30 ms + 30 ms + 3 ms = 217 ms

H.4.5 Watchdog timer threshold, t_fail

With properly implemented equipment, Passing the Pass sync_test should occur regularly until speed negotiation is completed. T_fail is used as a watchdog to indicate that occurrences of successful Pass sync_tests are spaced too far apart in time, that something is wrong, and speed negotiation should be restarted. This analysis determines the minimum value for t_fail by analyzing the maximum time required to pass the Pass sync_test after entering Negotiate_master (i.e., from Wait_for_signal or Slow_wait).

In most parts of the algorithm the transmitter cycles regularly through the speeds it supports, however, this may be prolonged in the transition into the Negotiate_master stage. This scenario is used in the analysis.

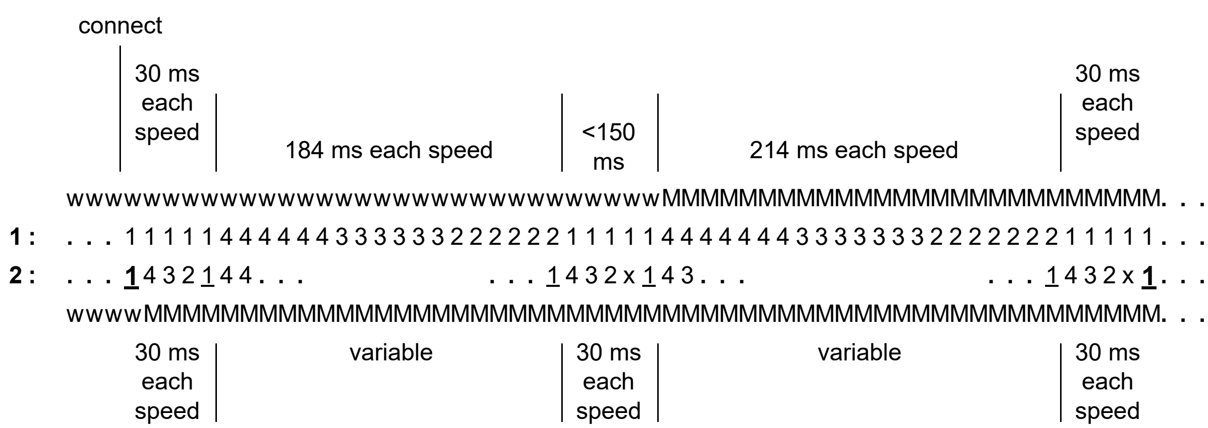

Figure H.1 - Example worst case timing for t_fail

These conventions and assumptions apply to figure H.1, figure H.2, and figure H.3:

a) the 1st row (1:) is the incoming speed received from the other port, Port 1;
b) the 2nd row (2:) is the Rx speed of the receiving port, Port 2;
c) the cable plant into Port 2 only supports SP1. It was connected just ahead of the beginning of the numbered sequence;
d) Port 2 detects Port 1 just after the beginning of the sequence; and
e) Port 1 detects Port 2 in the middle of the sequence (i.e., a cable plug event) with Rx_LOS false indicated by the change from Wait_for_signal to Negotiate_master.

Figure H.1 shows that the first occurrence of the next Pass sync_test may occur up to 1 614 ms after entry into Negotiate_master, the event that starts t_{neg}. Adding comfortable margin brings t_fail to 1 620 ms. Although detection of Port 1 is shown with Pass sync_test, for purposes of t_fail there is no difference if it is accomplished by Rx_LOS false.

H.4.6 Watchdog Timer test delay, t_wddly

The delay that is designed to be included in each cycle of the watchdog timer test loop is not critical. There is no requirement for a nonzero lower limit on the delay between watchdog timer tests. The choice of its upper limit balances two objectives:

a) the value of t_ncycl may be reduced by keeping the maximum t_wddly small; and
b) it should be large enough to allow an attractively simple implementation of the watchdog test that embeds it in the main algorithm adjacent to each Pass sync_test.

This implementation leads to the interval between successive watchdog tests being the duration of a Pass sync_test (t_rxcycl) plus the delay associated with execution of the maximum code that separates two successive Pass sync_test instances (a few hundred μs). To allow this, t_wddly is permitted to range up to a small margin above the maximum t_rxcycl.

$0 \leq$ t_wddly $\leq$ t_rxcycl (max) + margin = 32 ms

H.4.7 Speed recording time, t_ncycl

Due to some system configurations with ports that are capable of three or four speeds but share only one or two common speeds (e.g., due to a limiting cable plant), it is possible for speed negotiation to become prolonged. If this behavior is observed, negotiation may be hastened by reducing the list of transmitted speeds to match the list of detected receiver speeds. T_ncycl is used to determine that sufficient time has passed to have seen all possible speeds and to reduce the transmit speed list. This analysis determines the minimum value for t_ncycl by analyzing the maximum time required to record all speeds after exiting Wait_for_signal or Slow_wait.

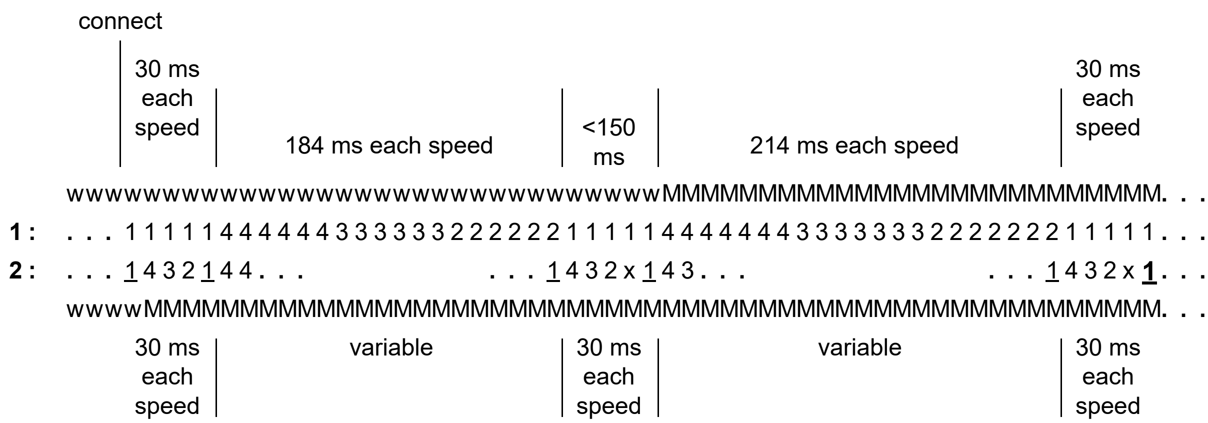

Figure H.2 - Example worst case timing for t_ncycl using Rx_LOS

Conventions and assumptions a) - e) in H.4.5 apply to figure H.2.

Port 2 detects a signal, not necessarily at the receiver speed, with Rx_LOS instead of using the Pass sync_test at the beginning of the sequence (i.e., Rx_LOS false causes entry into Negotiate_master, the event that starts t_{neg}, but no speed is recorded).

The requirement for t_ncycl is the same as for t_fail: 1 614 ms. However, certain fault cases may result in no speeds being detected during t_ncycl. To avoid the need for special logic for these cases, t_ncycl is extended to exceed the maximum possible watchdog timer expiration interval. This assures the watchdog timer triggers restart before the speed-reduction logic terminates without a speed.

t_ncycl = maximum [(t_ncycl(above), t_fail + t_wddly)] = 1 652 ms

Any/all other speeds would be detected within this time window.

H.4.8 Speed recording time initial value, t_ncinit

In the t_ncinit analysis no speed was recorded upon entry into Negotiate_master because Rx_LOS was used. In contrast, if the Pass sync_test is used to enter Negotiate_master, then one speed has already been recorded, and the issue is to determine the minimum time required to observe the remaining speeds.

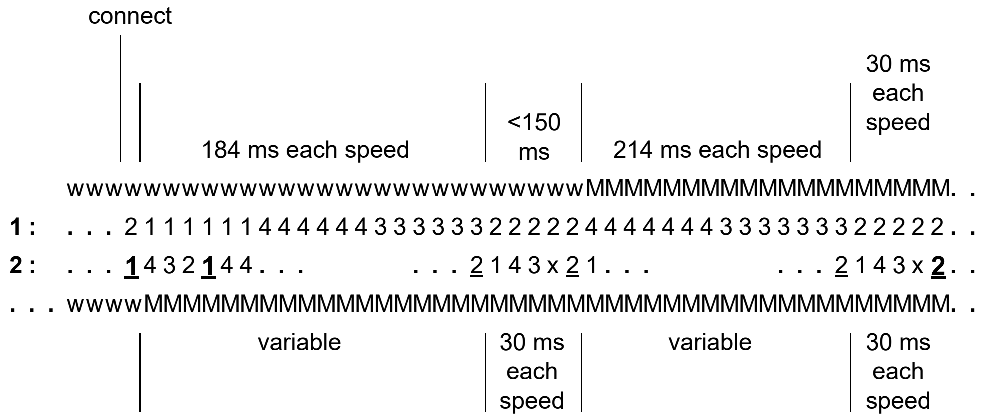

Figure H.3 - Example worst case timing for t_ncinit using Pass sync_test

Conventions and assumptions a) - e) in H.4.5 apply to figure H.3.

This time turns out to be 1 280 ms, 372 ms shorter than t_ncycl as determined in H.4.7. To add margin, 370 ms is chosen. However, to work in the algorithm, t_ncycl remains at 1 652 ms, and t_{nc} is initialized to 370 ms in state 12 or state 5B as t_ncinit. Any/all other speeds would be detected within the 1 280 ms time window.

H.4.9 Parameters relating to the optional slow_wait stage

H.4.9.1 Low processing load sleep time, t_sleep

This is maximum duration that the receiver may be cycled slowly on an inactive port. It is constrained only by the need to limit convergence time when a valid speed negotiation signal sequence is presented to a port that previously had no signal. This limit is arbitrarily chosen to be 5 s. Thus, t_sleep is:

= 5 000 ms.

H.4.9.2 Slow_wait cycle transmit cycle delay, t_txdly

The limits on the delay that is designed to be included in each cycle of the low processing overhead loop is designed to assure that the time interval of transmission at each speed is sufficient to meet the requirements of a downstream receiver in Negotiate_master stage to detect and record each speed (greater than t_txcycl), and insufficient to trigger the downstream receiver to transition from the Negotiate_follow stage to normal operation (less than t_stbl). Because t_stbl exceeds t_txcycl by 2 • t_rxcycl, the delay may be assured to be in the necessary range by the single test for delay greater than t_txcycle, executed at the maximum sampling interval, t_rxcycl.

t_txcycl ≤ t_txdly ≤ t_txcycl + t_rxcycl

H.4.9.3 Periodic sync search wake time, t_wake

The purpose of Slow_wait is to minimize receiver cycling to conserve demands on a processor. The receiver speed is cycled at the much slower rate used for transmitter cycling. However, to reliably detect a signal once one is presented, the device periodically resumes receiver speed cycling at the rate determined by t_rxcycl. The minimum time for cycling the receiver speeds at the rate determined by t_rxcycl to assure detecting an acceptable presented signal is the periodic sync search wake time. This analysis determines the minimum value for periodic sync search wake time by analyzing the maximum time required for the port to synchronize to a signal:

a) Port 1 is the remote transmitter in Negotiate_master;
b) Port 2 is the local (receiver) in Slow_wait wake mode;
c) the cable is already connected from Port 1 to Port 2 but only SP1 is supported; and
d) Port 2 detects Port 1 with the Pass sync_test at the end of the sequence.

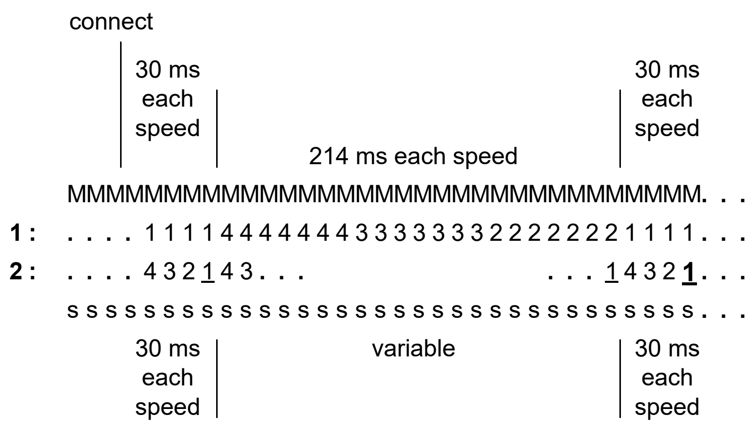

Figure H.4 - Example worst case timing for t_wake

Port 2 just missed Port 1 at the beginning of the numbered sequence, but finally catches it at the end. The times add up to 882 ms. This number is rounded up to 900 ms. Rx_LOS could eliminate this time.

H.4.10 Duration of disruption to single loops caused by connecting speed negotiating ports to hubs

H.4.10.1 Introduction

While a port that is in Arbitrated Loop topology is executing speed negotiation, the port is required to transmit some flavor of LIP. If this transmission is allowed to enter an active loop, it disrupts the operation of the loop. The scope and duration of this disruption may be limited by attaching Speed Negotiating ports to a loop only through hubs with this behavior:

a) if the hub participates in speed negotiation, it prevents disruption until the attached port has completed speed negotiation;
b) if the hub does not participate in negotiation, it is set to a fixed speed by design or by configuration action not specified herein; or
c) if the hub is operating at a fixed speed, it bypasses an attached port that is not presenting a signal at the operating speed of the hub.

A port executing speed negotiation does not disrupt a loop if it is attached to the loop via a negotiating hub or if the port does not support the speed at which a fixed speed hub is operating. However, during speed negotiation with a fixed-speed hub, if a port transmits at the speed of the hub, the hub inserts the port and loop disruption occurs. The following discussion derives the limits on the duration of these disruptions.

In the following discussion, only worst-case timings are presented. The disruption is considered to be the time(s) during which the port prevents normal operation of the loop before the port begins loop initialization.

NOTE 66 - Non-simultaneous duplex cable connections: If the cable plant from the attaching port connects the port's transmitter into the hub's receiver, periodic hub disruption occurs when/while the attaching port is transmitting at the hub's speed. This periodic disruption continues until shortly after the path from the hub's transmitter to the port's receiver is completed with sufficient time to complete speed negotiation before allowing port initialization. Hub disruption is limited to the normal port insertion disruption if the path from the hub's transmitter to the port's receiver is completed with sufficient time to complete speed negotiation before allowing the port's transmitter to be connected to the hub's receiver.

In general, if the path carrying the signal from the hub to the port is completed before the other path from the hub to the port in the duplex connection is completed, the port moves through speed negotiation with less, or without, initial disruption caused by the Slow_wait or Wait_for_signal stages.

Normal duplex connections with presently defined connectors do not control the sequencing of the connections.

The derivations here assume a realistic worst case of non-simultaneous cable direction connection where the signal from the port to the hub is presented t_rxcycl prior to the presentation of signal from the hub to the port. This allows up to 30 ms of disruption by the port before speed negotiation allows it to detect and possibly respond to the signal from the hub.

Each stage of speed negotiation may produce one or more disruptions. In some circumstances, the disruptions produced in successive stages may be contiguous, resulting in a longer single disruption. In other circumstances, transitions from one stage to the next may change transmitter speeds, causing the disruption to be discontinuous, but prolonging the overall interval during which disruptions occur. Subclauses H.4.10.2 through H.4.10.12 derive maximum single disruptions and groups of disruptions for each stage of speed negotiation and then uses these to derive the overall maximum disruption for the speed negotiation process.

In the example figures in H.4.10, the charting conventions introduced in H.4.1 are augmented as follows:

a) the speed line headed H: is for the hub;
b) the speed line headed PT: is for the port transmitter;
c) the speed line headed PR: is for the port receiver; and
d) if the stage notation S (upper-case S) is used, it represents the fast-sampling period of the Slow_wait stage, and s in the same line refers specifically to the slow-sampling period of the Slow_wait stage.

H.4.10.2 Maximum single disruption in Wait_for_signal stage

If the port becomes connected in the Wait_for_signal stage, its receiver is continuously changing and testing speeds at intervals not to exceed t_rxcycl, so speed negotiation allows it to remain in that stage (possibly disrupting) for no more than

4 • t_rxcycl = 120 ms

after a signal is presented and before it passes the Pass sync_test and transitions to the Negotiate_master stage. Non simultaneous connection may extend the possible disruption by another t_rxcycl to 150 ms. Transmission at any one speed may last as long as 184 ms so the maximum disruption of 150 ms is possible if the connection from port to hub is completed just as both the transmitter and receiver of the port transition to the speed of the hub

---

Editors Note 2 - CWC: There is no reference in the text to Figure H.5 to H.12. This needs to be fixed.

```
scale:                                  disrupt
one character = ten ms
                                          |
                                          |
                 n n n n n n n n n n n n n n n n n n n n n n n n n n n n n n n
          H:     4 . . . . . . 4 4 4 4 4 4 4 4 4 4 4 4 4 4 4 4 4 4 4 4 4 . .
          PT:    . . . . . . . 1 1 1 1 1 4 4 4 4 4 4 4 4 4 4 4 4 4 4 4 4 . .
          PR:    . . . . . . . 3 2 2 1 1 4 4 4 3 3 3 2 2 2 1 1 1 4 4 4 4 . .
                 w w w w w w w w w w w w w w w w w w w w w w w w w w w w MMM
                                          | 30 |      120 ms      |
                                          | m- |                  |
                                          | ms |                  |
                                   connect   connect
                                   (P to H)  (H to P)
```

Figure H.5 - Example of maximum single disruption, Wait_for_signal

H.4.10.3 Maximum single disruption in Slow_wait stage

The maximum single disruption during the Slow_wait stage is limited by the longest transmit time at a single speed. This length disruption is possible if connection is established during the slow-sampling period of the stage when the port is not transmitting at the speed of the hub. When the port's transmit speed reaches the hub's speed, it begins disruption. It transmits at this speed for t_txcycl + t_rxcycl = 184 ms, then tests for and detects sync. It then transitions to the Negotiate_master stage

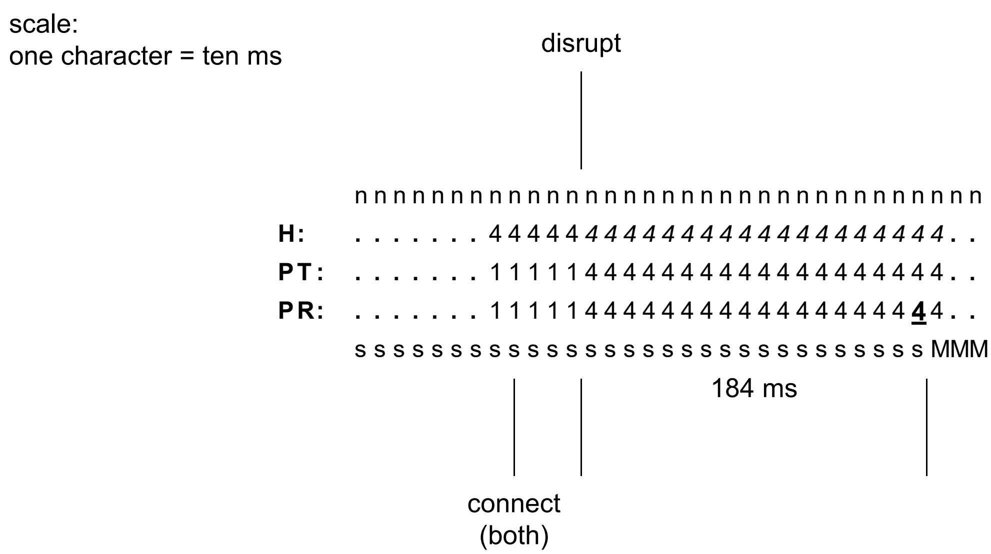

Figure H.6 - Example of maximum single disruption, Slow_wait

H.4.10.4 Maximum single disruption in Negotiate_master stage

The maximum single disruption during the Negotiate_master stage is limited by the stage's maximum transmission time at a single speed:

t_txcycl+2 • t_rxcycl = 214 ms.

This disruption time occurs if and only if the hub speed is not the maximum port speed. In this case, the transmit speed is set to the maximum speed of the port at the start of the stage, and is decreased periodically. When the port transmitter slows to the speed of the hub, it disrupts. None of the exit conditions for the Negotiate_master stage are met until the port finishes transmitting at the speed of the hub. At that time, it tests and detects the received speed equal to the transmitted speed, so exits to the Negotiate_follow stage.

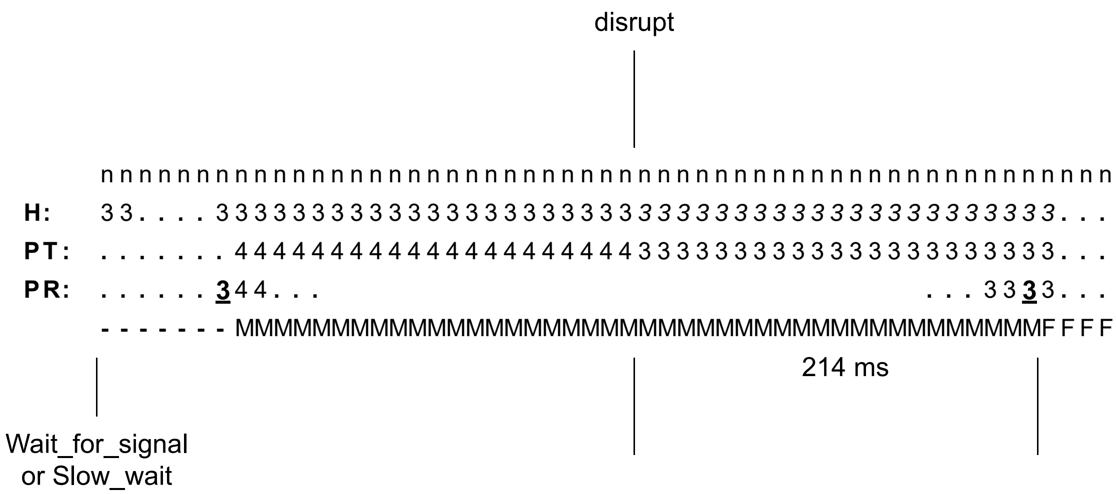

Figure H.7 - Example of maximum single disruption, Negotiate_master

By contrast, if the hub speed is equal to the maximum speed of the port, the Negotiate_master stage produces exactly one t_rxcycl = 30 ms of disruption. This is because the port has already synchronized at that speed, so the port enters the Negotiate_master stage with its receiver speed at maximum and its transmitter speed forced to maximum, assuring disruption. At the end of the first receive cycle, it again tests for sync. This time it detects sync at its maximum speed and exits to the Negotiate_follow stage.

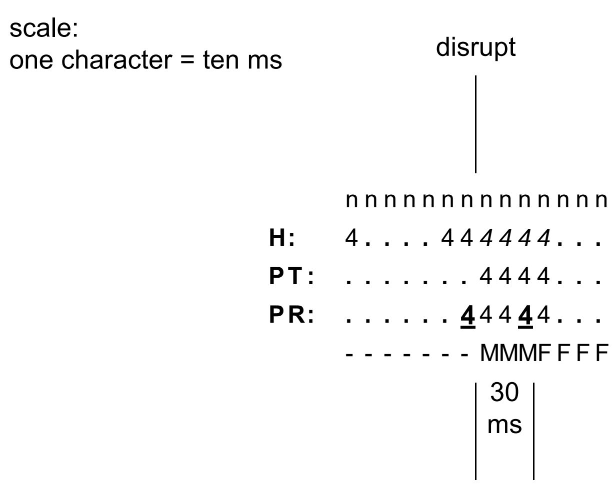

Figure H.8 - Example where hub is at maximum port speed

H.4.10.5 Maximum single disruption in Negotiate_follow stage

Since the upstream port is fixed speed, the Negotiate_follow stage never changes speeds, and tests for and detects sync for t_stbl + t_rxcycl = 247 ms. Since it is entered with the transmitter matching the hub, it disrupts the whole time. This simple case is not charted.

H.4.10.6 Maximum disruption group - Wait_for_signal

This maximum disruption group consists of the port in Wait_for_signal, first disrupting then not disrupting, for a total of 150 ms. As in the description of Maximum single disruption in Wait_for_signal stage (H.4.10.2), speed negotiation allows the port to remain in the Wait_for_signal stage for no more than:

4 • t_rxcycl = 120 ms

after a signal from the hub and 150 ms from onset of signal to the hub. The disruption pattern may not exceed this duration. If the port transmit speed initially matches the speed of the hub, but changes before the port receiver tests the hub's speed, the disruption may be of any duration less than 150 ms followed by a non-disruptive interval up to the balance of the 150 ms. Since the port transmit duration at any single speed is not allowed by speed negotiation to be less than t_txcycl = 154 ms, the port does not change speeds again (potentially disrupting again) before it transitions out of the Wait_for_signal stage.

```
scale:
one character = ten ms                    disrupt          end disrupt
                                            |                |
                 nnnnnnnnnnnnnnnnnnnnnnnnnnnnnn
          H:     4....444444444444444444444444..
          PT:    .....14444444444444444444333..
          PR:    .......3221144 4 33322211144 4 4..
                 wwwwwwwwwwwwwwwwwwwwwwwwwwMMM
                                 | 30 |   90 ms    | 30 |
                                 | ms |            | ms |
                              connect   connect
                              (P to H)  (H to P)
```

Figure H.9 - Example of maximum disruption group - Wait_for_signal

H.4.10.7 Maximum disruption group - Slow_wait

This maximum disruption group consists of the port in Slow_wait first for 120 ms disruptive followed by 554 ms nondisruptive finally followed by 184 ms disruptive. In this worst case, connection from the port to the hub occurs in the fast-sampling period of the Slow_wait stage while the port is transmitting at the hub's speed, just as the port begins receiving at the hub's speed. Disruption 1 begins. The receive cycle at the hub's speed ends t_rxcycl later, just as the signal from the hub reaches the port too late. Then, 3 • t_rxcycl later, just as the port’s receiver is about to sample the hub's speed again, the fast-sampling period ends and the hub's transmit speed changes to its next speed, ending the first disruption but preventing the receiver from staying at the hub's speed into the slow-sampling period. Now in the slow-sampling period, the port transmits and receives in sequence at three speeds other than that of the hub, unable to

synchronize but not disrupting, for 3 • t_txcycl. Then the port transmits and receives at the hub's speed, disrupting for another t_txcycl, at the end of which it finally tests and detects sync, and transitions to the Negotiate_master stage. Figure H.10 shows the speed of the hub is not the maximum speed of the port, so when the port begins transmitting at its maximum rate on entry to the Negotiate_master stage, this ends the second disruption.

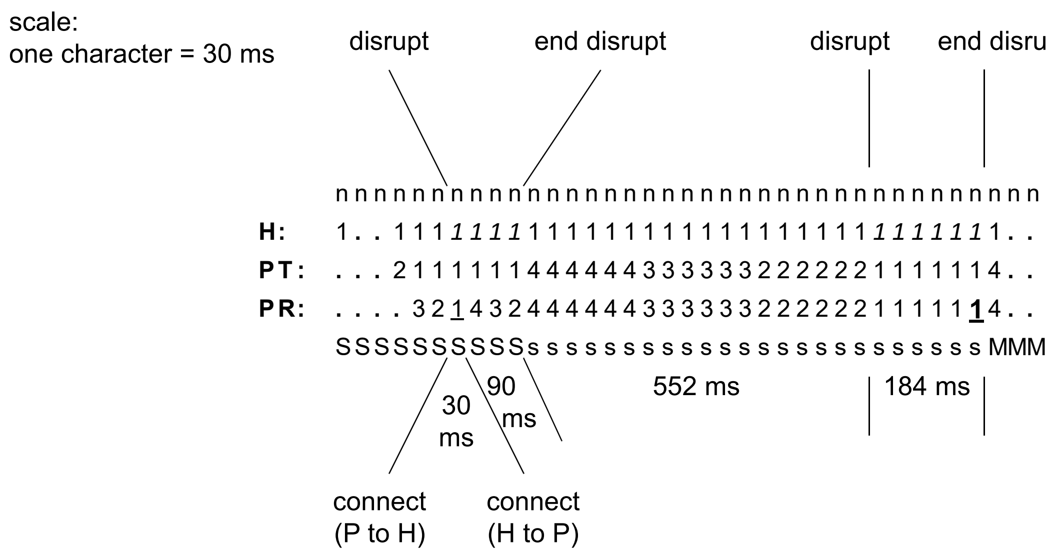

Figure H.10 - Example of maximum disruption group - Slow_wait

H.4.10.8 Maximum disruption group - Negotiate_master

This maximum disruption group consists of the port in Negotiate_master for 642 ms nondisruptive followed by 214 ms disruptive. In the Negotiate_master stage, the port begins to transmit at its maximum speed and (because the port was in sync to transition from the prior stage) it continues to receive at the speed of the hub.

If the operating speed of the hub is the maximum speed of the port, the Negotiate_master stage disrupts for 30 ms and transitions to the Negotiate_follow stage, as discussed in Maximum single disruption, Negotiate_master (see H.4.10.4).

If the operating speed of the hub is not the maximum speed of the port, the hub bypasses the port immediately, terminating any prior disruption. The port transmits in turn at as many as three non-matching speeds, for:

3 • (t_txcycl + 2 • t_rxcycl) = 642 ms.

Then it transmits at the speed of the hub, beginning a new disruption. This lasts for:

t_txcycl + 2 • t_rxcycl = 214 ms.

At the end of this transmit speed, the port tests and detects sync and therefore transitions to the Negotiate_follow stage. This case is charted in Figure H.11.

```
scale:
one character = 30 ms                                          disrupt
                                                                  |
                 nnnnnnnnnnn..nnnn..nnnn..nnnn..nnnnn
H:               11.....1111..1111..1111..1111..111..
PT:              ........444..4333..3222..2111..111..
PR:              .......1432..4.  ..3.  ..2.  ..111..
                 --------MMM..MMMM..MMMM..MMMM..MFFFF
                                   642 ms        214 ms
                 |        |                     |     |
                 |        |                     |     |
            Wait_for_signal                     |     |
             or Slow_wait                       |     |
```

Figure H.11 - Example of maximum disruption group - Negotiate_master

H.4.10.9 Maximum disruption group - Negotiate_follow

This maximum disruption group consists of the port connecting while in Negotiate_follow, causing 247 ms disruption. Since the hub port is fixed speed, the Negotiate_follow stage is entered with the port transmitter set to that speed and the port does not change speeds. The Negotiate_follow stage therefore produces a single disruption that lasts throughout the stage. This case is not charted.

H.4.10.10 Maximum single disruption overall

A longer disruption may result if a disruption at one stage carries over to the next stage.

Because the transition from the Negotiate_master stage to the Negotiate_follow stage always happens without a speed change, the last disruption in the Negotiate_master stage always is concatenated with the disruption in the Negotiate_follow stage.

The disruption caused in the Wait_for_signal or Slow_wait stages may concatenate to the disruption caused in the Negotiate_master stage only if the hub is operating at the maximum speed of the port (though other conditions may still prevent it). This is because the port forces its transmitted speed to its maximum at the start of the Negotiate_master stage. If this is not the speed of the hub, the port is bypassed, breaking the disruption.

In the case where the hub speed is not the maximum speed of the port, the maximum disruption for the Negotiate_master stage plus the maximum disruption for the Negotiate_follow stage may concatenate to a single disruption of 214 + 247 = 461 ms. This case being straightforward, it is not charted.

In the case where the hub speed is the maximum speed of the port and the port has entered the Slow_wait stage (Wait_for_signal has a shorter disruption), the maximum disruption for the Slow_wait stage plus 30 ms disruption for the Negotiate_master stage plus the maximum disruption for the Negotiate_follow stage may concatenate to 461 ms (i.e., 184 + 30 + 247 = 461).

scale:
one character
=
ten ms

disrupt

nnnnnnnnnnnnnnnnnnnnnnnnnnnnnnnnnnnnnnnnnnnnnnnnnnnnnnnnnnnnnnn

H: 44......4444444444444444444444444444444444444444444444444444...

PT: 44......1111144444444444444444444444444444444444444444444444...

PR: 44......1111144444444444444444**4**44**4**444444444444444444444444**4**4...

wwwwwsssssssssssssssssssssssssMMMFFFFFFFFFFFFFFFFFFFFFFFFFnnnn

184 ms | 30 ms | 247 ms

connect | Loop Init

Figure H.12 - Example of maximum single disruption overall

H.4.10.11 Maximum disruption group overall

The maximum disruption group overall consists of three disruptions occurring over a 1 961 ms period. In no case does the port transmit speed change on transition from the Negotiate_master stage to the Negotiate_follow stage, so the lengths of those stages concatenate, but the transition does not introduce an additional period of disruption.

The example worst-case disruption group for the Slow_wait stage exceeds the duration of the example disruption group for the Wait_for_signal stage, and additionally, its exit conditions match the entry conditions for the worst-case disruption group for the Negotiate_master stage, so its duration and number add to those of the Negotiate_master example.

The result is:

1) 120 ms disruptive in the Slow_wait stage;
2) 554 ms nondisruptive in the Slow_wait stage;
3) 184 ms disruptive in the Slow_wait stage;
4) 642 ms nondisruptive in the Negotiate_master stage; and
5) 461 ms disruptive in the Negotiate_master and Negotiate_follow stages.

Total = 1 961 ms

NOTE 67 - Cable plants: Limits on the cable plant need not be considered in this discussion because the presumptions for this analysis include that the cabling plant supports the speed of the hub and the hub bypasses if presented with a signal at any other speed regardless of the quality of the cabling.

NOTE 68 - Use of Rx_LOS: Use of Rx_LOS is permitted during the Wait_for_signal and Slow_wait stages. If it is effective, it greatly reduces the likelihood and maximum length of disruption during those stages. However, the size of the possible improvement is sensitive to cabling capability.

H.4.10.12 Summary of loop disruption

Attaching a port capable of speed negotiation to an Arbitrated Loop hub may generate up to three disruptions to existing loop operation. The properties of these disruptions are summarized here:

a) t_disrupt1: The maximum single disruption duration is 461 ms; and
b) t_disrupt2: The maximum duration of a series of disruptions is 1 961 ms.

Both single and concatenated series disruption times may be significantly reduced, and the greatest number of disruptions reduced to two, by disabling the Slow_wait stage or by using Rx_LOS, if it is reliable, to initially detect a signal.

H.4.11 Algorithm convergence time

This subclause describes the convergence time properties of the algorithm. Use of this result is beyond the scope of this annex.

The longest convergence time, including Wait_for_signal, is conservatively 2 571 ms (i.e., 11 times the maximum transmitter time (214ms) + t_stbl (217 ms)). The longest convergence time is with both ports capable of negotiating at all four speeds and where the infrastructure only supports the lowest speed. Based on this calculation a maximum convergence time of 2.6 s is used for the speed negotiation algorithm.

Convergence time is the elapsed time between start and stop as defined here:

a) start = the last of (port A beginning speed negotiation, port B beginning speed negotiation connection of port A to port B cable plant, connection of port B to port A cable plant); and
b) stop = the latter of (port A entering Normal_operation, port B entering Normal_operation).

If the optional slow_wait stage is implemented and enabled, Slow_wait replaces Wait_for_signal after a negotiation failure. Since Slow_wait is t_sleep of transmit cycling time alternating with logic equivalent to the Wait_for_signal algorithm, the maximum length of Slow_wait is approximately the maximum length of Wait_for_signal plus t_sleep. The net is extending the maximum convergence time by t_sleep, giving about 7.5 s if Slow_wait is enabled.

In the highly unlikely event that the Slow_wait port is actively testing for Transmission Word Synchronization just as its attached port is transitioning from a wait stage to Negotiate_master stage, it is possible for the test to fail. This causes an additional delay of up to t_sleep + t_wake = 5 900 ms, extending the convergence time to about 13.5 s.

H.5 Ports using separate PMD components

This subclause describes the issues with using separate PMD components in a speed agile application. Figure H.13 shows the general relationship of the two ports and the physical architecture within one of the ports.

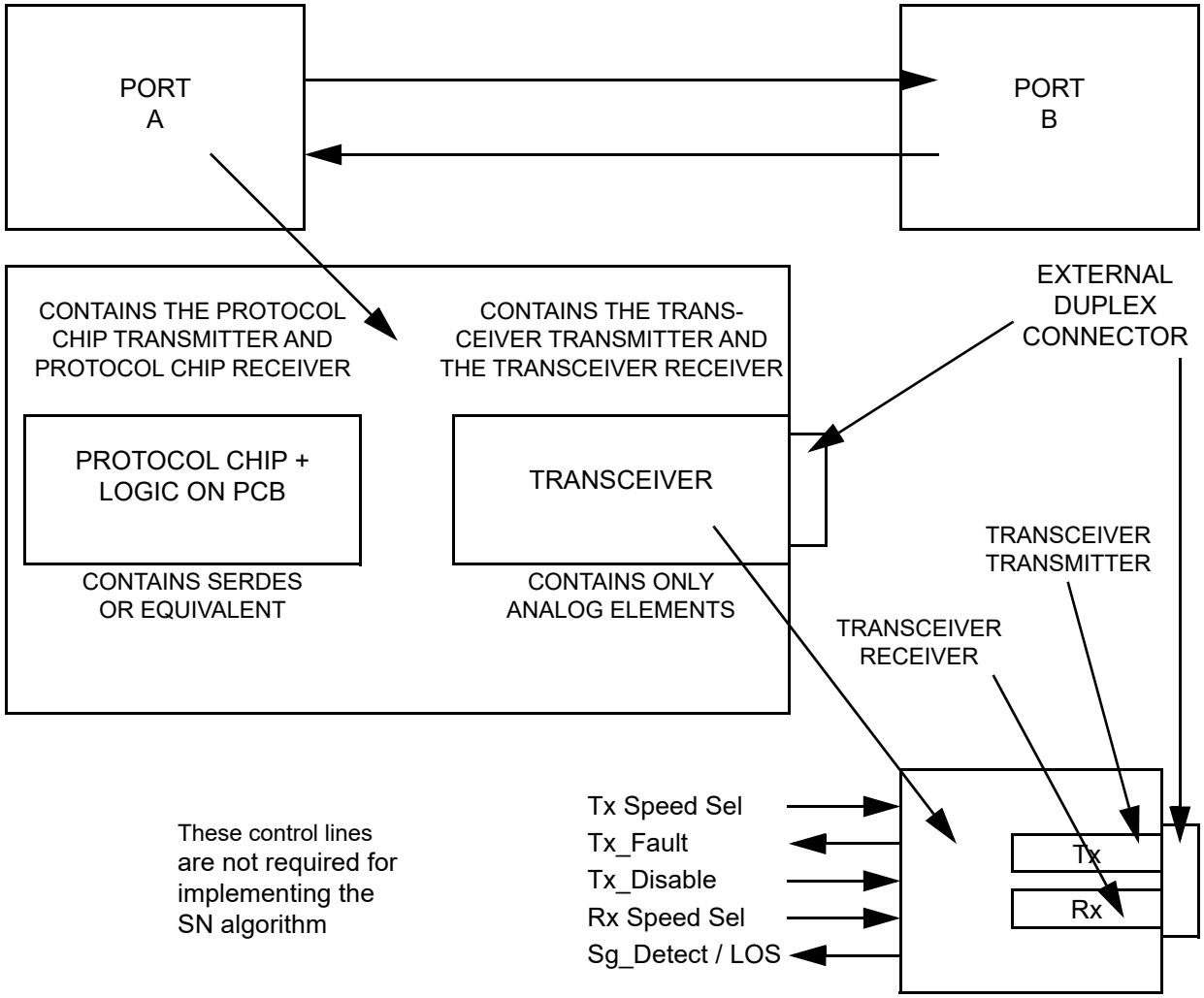

Figure H.13 - Physical architecture of a port with a separate transceiver component

If a port uses a separate PMD component (e.g., a removable PMD component such as a GBIC) care is required to ensure that both the port supplier and the PMD component supplier clearly understand what is required to achieve the speed agility and to execute the speed negotiation algorithm.

Signal timings are formally measured at the external duplex port connector. Signal timing properties affected by the speed negotiation algorithm are assumed to match the timings specified in the algorithm where applicable (e.g., speed changes executed in the protocol chip are assumed to show up at the external connector within the allowed time for speed changes). The 1 ms requirement for changing speeds formally applies at the external connector. This assumption is practical because the granularity of the timing requirements for the speed negotiation algorithm are orders of magnitude more coarse than the signal propagation time through normal removable PMD components and the logic. In practice, only the protocol chip and other board logic are capable of enforcing accurate timings so if the separate PMD has time delays of the order of the speed negotiation algorithm timing granularity the assumption of signal timing values applying at the port connector is rendered invalid.

Several additional considerations of separate PMDs are listed here:

a) the protocol chip and other board logic may be supplied from different sources than the transceiver. In the design of speed negotiation, the protocol chip and other board logic were not treated as a unit with the transceiver. Specifications have been placed specifically on one or the other (or both separately) and the use of any control signals have been noted;
b) there are effectively two transmitters and two receivers in each port. The receiver in the transceiver is termed the transceiver receiver and the receiver in the protocol chip or on the board, but not part of the transceiver is termed the protocol chip receiver. Similarly: transceiver transmitter and protocol chip transmitter;
c) the speed of the transceiver transmitter is controlled by the protocol chip and other board logic by changing the speed of the data signals driven from the protocol chip. However, the launch amplitude and /or other properties of the transceiver transmitter either needs to be:
   A) common to all supported speeds;
   B) a control signal to the transceiver is used to set the amplitude of the transceiver transmitter; or
   C) internal circuitry within the transceiver senses the incoming bit rate and adjusts the amplitude accordingly;

NOTE 69 - The requirements for full speed and double speed are not mutually exclusive (i.e., it is possible to design a transceiver transmitter that meets both the full speed and the double speed requirements without any change).

and

d) the speed of the transceiver receiver is similarly controlled by either:
   A) having the transceiver receiver specifications common to all supported speeds;
   B) a control signal to the transceiver is used to set the properties of the transceiver receiver; or
   C) internal circuitry within the transceiver senses the incoming bit rate and adjusts the receiver parameters accordingly.

NOTE 70 - The requirements for full speed and double speed are not mutually exclusive (i.e., it is possible to design a transceiver receiver that meets both the full speed and the double speed requirements without any change). For any speeds higher than double speed the transceiver receiver needs to change its properties in order to meet the transceiver receiver requirements.

H.6 Implementation notes

The Slow_wait stage described in 8.6.6 may be implemented as a means of reducing processing time required to poll ports that remain unconnected or unused for extended periods of time. The speed negotiation algorithm may also be disabled for ports determined to be inactive by methods not controlled by this standard, such as:

a) commands from an out of band management system;
b) hardware jumpers;
c) using a signal detect function (Rx_LOS) to detect when a connection is made (may not be a reliable indication that the Tx side is connected and requires that the opposite connected port be transmitting in a manner that allows signal detection to function); or
d) using an automatic sensing of connector retention engagement or the presence of a removable PMD device to sense plausible device attachment (does not guarantee that the opposite end of the link is connected).

Annex I
(informative)
Fibre Channel Interactions With the IEEE-SA Registration Authority

I.1 Overview

At its discretion, the IEEE-SA Registration Authority provides several formats of registered numbers that are guaranteed to be unique. Details of how these numbers are provided are managed by the IEEE-SA Registration Authority. Fibre Channel products use the following general formats of unique, registered numbers available from the IEEE-SA Registration Authority:

a) AOIs;
b) ELI-48s;
c) ELI-64s;
d) EUI-48s; and
e) EUI-64s.

AOIs are 24-bit (i.e., 3 octet) values than may be used to create ELI-64 values and Fibre Channel Name_Identifiers (see clause 18).

The IEEE-SA Registration Authority may require manufacturers to:

a) to provide proof that a new AOI is being requested because at least one of the identifier spaces using a currently assigned AOI is substantially exhausted; and
b) continue using the original AOIs in other identifier spaces until they are also exhausted.

Fibre Channel products may use ELI-48s, ELI-64s, EUI-48s, and EUI-64s if conformance with the requirements stated in the IEEE Identifier Guidelines (see Annex M) are maintained in:

a) the methods for obtaining those identifiers; and
b) the uses made of those identifiers after they are obtained.

The IEEE Registration Authority may be contacted at the following URL:

https://standards.ieee.org/products-services/regauth/index.html

The tutorial on Fibre Channel uses of values defined in the IEEE Identifier Guidelines has been submitted to IEEE by T11 and is replicated in I.4.

I.2 Uses of IEEE identifiers other than Name_Identifiers

In addition to construction of several forms of Name_Identifiers (see clause 18 and see I.4), Fibre Channel uses the AOI in the RNFT LS_ACC (see FC-LS-4).

I.3 Historical summary of AIO, ELI-48, ELI-64, EUI-48, and EUI-64

Because some AOIs provided after January 2014 have a one in the bit that is equivalent to the MAC Address Universally or Locally Administered Address (U/L) bit (i.e., a MAC Address generated from that AOI is defined to not be globally unique), the IEEE-SA Registration Authority

a) prohibits the use of such AOIs in MAC Addresses;
b) defines ELI-48s and ELI-64s as the identifiers that use such AOIs; and
c) prohibits the use of such AOIs in EUI-48s and EUI-64s.

Some of the AOIs provided before January 2014 have the U/L bit set to zero. Use of pre-2014 such AOIs in MAC Addresses, EUI-48s, and EUI-64s is permissible if:

a) U/L bit is zero in the AOI provided by the IEEE Registration Authority; and
b) the application that is using the AOI does not change the U/L bit to a one.

I.4 Guidelines for Fibre Channel Use of the IEEE-Administered Organizational Identifiers

Fibre Channel standards support several identifier formats (i.e., Name_Identifiers, see clause 18) that incorporate AOI values. These formats are summarized in table I.1.

Table I.1 - Fibre Channel identifiers using OUI

NAA Type	NAA Code	size of identifier	Reference
NAA IEEE 48-bit Address	1h	8 bytes	table I.2
NAA IEEE Extended	2h	8 bytes	table I.3
NAA IEEE Registered	5h	8 bytes	table I.4
NAA IEEE Registered Extended	6h	16 bytes	table I.5

Name_Identifiers are defined in FC-FS-2 and are used to identify Fibre Channel entities (e.g., Nx_Ports, nodes, Fx_Ports, E_Ports, B_Ports, Switches, and Fabrics). Name_Identifiers are used in several protocols specified in Fibre Channel standards. Name_Identifiers are NAA format identifiers that may include IEEEIEEE-Administered Organizational Identifiers.

SCSI and ATA standards also specify the use of Name_Identifiers by referencing FC-FS-6.

The NAA IEEE 48-bit Address format is shown in table I.2.

Table I.2 - NAA IEEE 48-bit Address format

Byte\Bit	7	6	5	4	3	2	1	0
0	NAA (1h)				0h			
1	00h							
2	ELI-48 or EUI-48							
⋮								
7								

The ELI-48 and EUI-48 are as defined in the IEEE Identifier Guidelines (see Annex M).

The NAA IEEE Extended format is shown in table I.3.

Table I.3 - NAA IEEE Extended format

Byte\Bit	7	6	5	4	3	2	1	0
0	NAA (2h)				(MSB)			
1	VENDOR-SPECIFIC IDENTIFIER							(LSB)
2	ELI-48 or EUI-48							
⋮								
7								

The ELI-48 and EUI-48 are as defined in the IEEE Identifier Guidelines (see Annex M).

The NAA IEEE Registered format is shown in table I.4.

Table I.4 - NAA IEEE Registered format

Byte\Bit	7	6	5	4	3	2	1	0
0	NAA (5h)				(MSB)			
1	AOI							
2								
3				(LSB)	(MSB)			
4	VENDOR-SPECIFIC IDENTIFIER							
⋮								
7								(LSB)

The AOI is as defined in FC-FS-6 and its references to the "Guidelines for Use of Extended Unique Identifier (EUI), Organizationally Unique Identifier (OUI), and Company_ID (CID)" tutorial.

The NAA IEEE Registered Extended format is shown in table I.5.

Table I.5 - NAA IEEE Registered Extended format

Byte\Bit	7	6	5	4	3	2	1	0
0	NAA (6h)				(MSB)			
1	AOI							
2								
3				(LSB)	(MSB)			
4	VENDOR-SPECIFIC IDENTIFIER							
⋮								
7								(LSB)
8	(MSB)	VENDOR-SPECIFIC IDENTIFIER EXTENSION						
⋮								
15								(LSB)

The AOI is as defined in FC-FS-6 and its references to the "Guidelines for Use of Extended Unique Identifier (EUI), Organizationally Unique Identifier (OUI), and Company_ID (CID)" tutorial.

Annex J
(Informative)
Fibre Channel LAN Protocols Support

J.1 Overview

There is the possibility to use Fibre Channel as a cluster interconnect or as a generic network technology for protocols other than IPv6 and IPv4. Some cluster protocols are designed to operate over Ethernet and are mapped directly over the link level. In a similar manner, the IS-IS routing protocol may be used for IP routing, but its messages are mapped directly over the link level, they are not encapsulated in IP packets. This annex provides some guidance to people interested in mapping such protocols over Fibre Channel in a manner consistent with the latest IP over FC specifications (see RFC 4338).

This annex does not apply to transport of IPv4, IPv6, and ARP packets over Fibre Channel. For those protocols, see RFC 4338.

J.2 LAN Capable Nx_Ports

A LAN capable Nx_Port:

a) should support Class 3;
b) should support continuously increasing SEQ_CNT; and
c) should support a Receive Data_Field Size for Device_Data FC frames of at least 1024 bytes.

Given that some LAN protocols carry the MAC address also in the LAN Data field (see J.3.1), it is recommended for a LAN capable Nx_Port to have an IEEE 48-bit format N_Port_Name (type 1h, see 18.3).

J.3 LAN Encapsulation

J.3.1 LAN Packet Formats

Most LAN protocols are encapsulated in Ethernet packets, having the format shown in table J.1.

Table J.1 - Ethernet Packet Format

Item	Size (Bytes)
Destination MAC Address	6
Source MAC Address	6
EtherType	2
LAN Data	46 .. 1500
FCS	4

IS-IS messages are encapsulated instead in IEEE 802.3 packets, having the format shown in table J.2.

Table J.2 - IEEE 802.3 Packet Format

Item	Size (Bytes)
Destination MAC Address	6
Source MAC Address	6
Length	2
LLC Header	3
LAN Data	46 .. 1500
FCS	4

J.3.2 FC Sequence Format for LAN Packets

A LAN packet is mapped to an Information Unit at the FC-4 level of Fibre Channel, which in turn is mapped to a Sequence by the FC-2 level.

An Information Unit mapping an Ethernet packet should carry the Network_Header (see 14.4) and the LLC/SNAP header (see J.3.3), resulting in the Information Unit format shown in table J.3.

Table J.3 - FC Information Unit Mapping an Ethernet Packet

Item	Size (Bytes)
Network_Header	16
LLC/SNAP Header	8
LAN Data	46 .. 1500

An Information Unit mapping an IEEE 802.3 packet should carry the Network_Header (see 14.4) and the LLC header (see J.3.4), resulting in the Information Unit format shown in table J.4.

Table J.4 - FC Information Unit Mapping an IEEE 802.3 Packet

Item	Size (Bytes)
Network_Header	16
LLC Header	3
LAN Data	46 .. 1500

The ESP_Header (see 14.3) may be used to secure the FC frames composing the LAN Sequence. Other types of Optional Header should not be used in a LAN Sequence.

A LAN Sequence may consist of more than one frame. In this case the first frame of the Sequence should include the Network_Header and the LLC/SNAP header, while the other frames should not include them.

LAN packets should be mapped to Sequences sent in Class 3.

J.3.3 LLC/SNAP Header

The fields of the LLC/SNAP Header (see IEEE-LLC) are shown in table J.5.

Table J.5 - LLC/SNAP Header Format

Item	Size (Bytes)
DSAP	1
SSAP	1
CTRL	1
OUI	3
PID	2

To map an Ethernet packet over Fibre Channel the following code points apply:

a) DSAP: AAh;
b) SSAP: AAh;
c) CTRL: 03h;
d) OUI: 000000h; and
e) PID: the ETHER TYPE identifying the Ethernet protocol (see ETHER TYPES).

J.3.4 LLC Header

The fields of the LLC Header (see IEEE-LLC) are shown in table J.6.

Table J.6 - LLC Header Format

Item	Size (Bytes)
DSAP	1
SSAP	1
CTRL	1

To map an IS-IS packet over Fibre Channel the following code points apply:

a) DSAP: FEh;
b) SSAP: FEh; and
c) CTRL: 03h.

J.3.5 Frame_Header Code Points

To map a LAN packet over Fibre Channel the following code points apply:

a) R_CTL: 04h (Device_Data frame with Unsolicited Data Information Category);
b) TYPE: 05h (IP over Fibre Channel);
c) CS_CTL/Prio: 00h is the default. See 12.5 for other values;

d) DF_CTL: If the ESP_Header is not used, then 20h (Network_Header) for the first frame of a LAN Sequence, 00h for the following frames. If the ESP_Header is used, then 60h for the first frame of a LAN Sequence, 40h for the following frames;

e) F_CTL, SEQ_ID, SEQ_CNT, OX_ID, RX_ID: see J.5 and J.6; and

f) Parameter: if Relative Offset is not used, the content of this field should be ignored by the receiver, and should be set to zero by the sender. If Relative Offset is used, see 12.13.

J.4 Multicast and Broadcast Mapping

LAN multicast and broadcast packets should be mapped to FC Sequences addressed to the broadcast N_Port_ID FFFFFFh, sent in Class 3 in a unidirectional Exchange (see J.6). The Destination N_Port_Name field of the Network_Header should be set to the value 1000-FFFF-FFFF-FFFFh for LAN broadcast packets, and to the LAN multicast address prepended with 1000h for LAN multicast packets.

An Nx_Port supporting LAN protocols should be able to map a received broadcast Class 3 Device_Data frame to an implicit Port Login context in order to handle LAN multicast or broadcast packets. The Receive Data_Field Size of this implicit Port Login should be the same across all the Nx_Ports connected to the same Fabric, otherwise FC broadcast transmission does not work. In order to reduce the need for FC Sequence segmentation, the Receive Data_Field Size of this implicit Port Login should be 1024 bytes. This Receive Data_Field Size requirement applies to broadcast Device_Data frames, not to ELSs.

J.5 Sequence Management

FC Sequences carrying LAN packets should be non-streamed. In order to avoid missing frame aliasing by Sequence_ID reuse, an Nx_Port supporting LAN packets should use continuously increasing SEQ_CNT. Each Exchange should start by setting SEQ_CNT to zero in the first frame, and every frame transmitted after that should increment the previous SEQ_CNT by one.

J.6 Exchange Management

To transmit LAN packets to another Nx_Port or to a multicast/broadcast address, an Nx_Port should use dedicated unidirectional Exchanges (i.e., Exchanges dedicated to LAN packet transmission and that do not transfer Sequence Initiative). As such, the Sequence Initiative bit in the F_CTL field of the Frame_Header should be set to zero. The RX_ID field of the Frame_Header should be set to FFFFh.

Unicast FC Sequences carrying unicast Control Protocol packets should be sent in short lived unidirectional Exchanges (i.e., Exchanges containing only one Sequence, in which both the First_Sequence and Last_Sequence bits in the F_CTL field of the Frame_Header are set to one). Unicast FC Sequences carrying other LAN packets should be sent in a long lived unidirectional Exchange (i.e., an Exchange containing one or more Sequences). LAN multicast packets should not be carried in unicast Sequences (see J.4).

Broadcast FC Sequences carrying multicast or broadcast Control Protocol packets should be sent in short lived unidirectional Exchanges. Broadcast FC Sequences carrying other LAN multicast traffic may be sent in long lived unidirectional Exchanges to enable a more efficient multicast distribution.

Reasons to terminate a long lived Exchange include the termination of Port Login and the completion of the LAN communication. A long lived Exchange may be terminated by setting to one the Last_Sequence bit in the F_CTL field of the Frame_Header, or via the ABTS (Abort Sequence) protocol. A long lived Exchange should not be terminated by transmitting the LOGO ELS, since this may terminate open Exchanges on other FC-4s (see FC-LS-4).

Annex K
(Informative)
RS-FEC Code Word Examples

K.1 32GFC - Idle Pattern with 64B/66B Scrambler Bypass Disabled (scr_bypass=0)

K.1.1 Overview

This annex provides example RS-FEC codewords produced by 64B/66B to 256B/257B transcoding (see 5.4.2), Reed-Solomon encoding (see 5.4.3) and scrambling (see 5.4.4) computations. Results of each computation are provided in a tabular form. The contents of the tables are transmitted from left to right within each row starting from the top row and ending at the bottom row. The tables contain both binary and hexadecimal representations of the data. For the hexadecimal representation, the most significant bit of each hex symbol is transmitted first.

K.1.2 Input to the 64B/66B to 256B/257B transcoder

Table K.1 contains a sequence of 80 66-bit blocks corresponding to the PCS transmission of Idle control characters. The initial value of the scrambler was set to 0x0ea1e77eed301ec, which corresponds to bits 6 to 63 of the first 64-bit payload in the first row of table 74A-2 of annex 74A of IEEE 802.3-2015. Bit 6 is assigned to S57 and bit 63 is assigned to S0 (see 5.3.3).

Table K.1 - 64B/66B to 256B/257B transcoder input

Sync <0:1>	64-bit payload, hex<2:65>	Sync <0:1>	64-bit payload, hex<2:65>	Sync <0:1>	64-bit payload, hex<2:65>	Sync <0:1>	64-bit payload, hex<2:65>
10	ad5a3bf86d9acf5c	10	de55cb85df0f7ca0	10	e6ccff8e8212b1c6	10	d63bc6c309000638
10	70e3b0ce30e0497d	10	dc8df31ec3ab4491	10	66fb9139c81cd37b	10	b57477d4f05e3602
10	8cfd495012947a31	10	e7777cf0c6d06280	10	44529cf4b4900528	10	85ce1d27750ad61b
10	456d5c71743f5c69	10	c1bf62e5dc5464b5	10	dc6011be7ea1ed54	10	1cf92c450042a75f
10	cc4b940eaf3140db	10	77bb612a7abf401f	10	c22d341e90545d98	10	ce6daf1f248bbd6d
10	dd22d0b3f9551ed6	10	574686c3f9e93898	10	2e52628f4a1282ce	10	f20c86d71944aab1
10	55133c9333808a2c	10	1aa825d8b817db4d	10	637959989f3021eb	10	976806641b26aae9
10	6a37d4531b7ed5f2	10	53c3e96d3b12fb46	10	528c7eb8481bc969	10	ab8f9980d5a54559
10	9a4d2abfda65cc33	10	94fe646efe5af02d	10	9a65ae5fcd88c03a	10	5ef08673168def9b
10	220c871a953fffc6	10	ce0bb95ac263e6c1	10	4f6a917d1a676571	10	5890918c7b687d75
10	44d2b3e43096f836	10	84cdd4fc48b79608	10	b3e4503e3c824a8c	10	fd6d0b1a39687929
10	1730167c08302a69	10	4c15ff56de92b1ad	10	d0c2f0d4ff0dee95	10	e1422ee2e8b92125
10	ed5acaf86592fcee	10	de799be0b903c880	10	2714ffbf40bc09f6	10	c3be97c3c285009f
10	1020faf19f606631	10	93007cabbb3f8c9d	10	ef6955f7f43df5d0	10	4dbd0616afe60e1f
10	3a1e49b7c7f7bb5d	10	901d828746ceec61	10	71ed3c097158c224	10	11adb3d81e13d263
10	a350d1a343b2394b	10	eab30ca27b5b34e3	10	90359ef711ed53d9	10	9b446763c8627ea8
10	6e891c0f4842b823	10	c4d786a25727a7fc	10	094fe7da31fb60cd	10	9f9a004de5e70767
10	054bdd77b7cb4e7b	10	c598cb710558af67	10	fc386d1f99d3a925	10	4928e0b43e781893
10	5a44dd3eb8b2ad6c	10	94462af4f583d770	10	8061ba9381f51f55	10	476d4eded7c90fcc
10	1efc25aa6a7e0b4c	10	93dd968c06a56809	10	9768e9d1ba74d3b6	10	014e9dc9f13670bb

K.1.3 Output of the 64B/66B to 256B/257B transcoder

Table K.2 contains a series of 257-bit transmission words. Each row of the table is a set of 4 66-bit blocks, representing Idle control characters output by the PCS (see table K.1), that has been converted to one 257-bit block (see 5.4.2). The resulting set of 20 257-bit blocks is input to the RS(528,514) encoder.

Table K.2 - 64B/66B to 256B/257B transcoder output

Header <0:4>	Payload, hex <5:64>	Payload, hex <65:128>	Payload, hex <129:192>	Payload, hex <193:256>
00000	a5a3bf86d9acf5c	de55cb85df0f7ca0	e6ccff8e8212b1c6	d63bc6c309000638
00000	7e3b0ce30e0497d	dc8df31ec3ab4491	66fb9139c81cd37b	b57477d4f05e3602
00000	8fd495012947a31	e7777cf0c6d06280	44529cf4b4900528	85ce1d27750ad61b
00000	46d5c71743f5c69	c1bf62e5dc5464b5	dc6011be7ea1ed54	1cf92c450042a75f
00000	c4b940eaf3140db	77bb612a7abf401f	c22d341e90545d98	ce6daf1f248bbd6d
00000	d22d0b3f9551ed6	574686c3f9e93898	2e52628f4a1282ce	f20c86d71944aab1
00000	5133c9333808a2c	1aa825d8b817db4d	637959989f3021eb	976806641b26aae9
00000	637d4531b7ed5f2	53c3e96d3b12fb46	528c7eb8481bc969	ab8f9980d5a54559
00000	94d2abfda65cc33	94fe646efe5af02d	9a65ae5fcd88c03a	5ef08673168def9b
00000	20c871a953fffc6	ce0bb95ac263e6c1	4f6a917d1a676571	5890918c7b687d75
00000	4d2b3e43096f836	84cdd4fc48b79608	b3e4503e3c824a8c	fd6d0b1a39687929
00000	130167c08302a69	4c15ff56de92b1ad	d0c2f0d4ff0dee95	e1422ee2e8b92125
00000	e5acaf86592fcee	de799be0b903c880	2714ffbf40bc09f6	c3be97c3c285009f
00000	120faf19f606631	93007cabbb3f8c9d	ef6955f7f43df5d0	4dbd0616afe60e1f
00000	31e49b7c7f7bb5d	901d828746ceec61	71ed3c097158c224	11adb3d81e13d263
00000	a50d1a343b2394b	eab30ca27b5b34e3	90359ef711ed53d9	9b446763c8627ea8
00000	6891c0f4842b823	c4d786a25727a7fc	094fe7da31fb60cd	9f9a004de5e70767
00000	04bdd77b7cb4e7b	c598cb710558af67	fc386d1f99d3a925	4928e0b43e781893
00000	544dd3eb8b2ad6c	94462af4f583d770	8061ba9381f51f55	476d4eded7c90fcc
00000	1fc25aa6a7e0b4c	93dd968c06a56809	9768e9d1ba74d3b6	014e9dc9f13670bb

K.1.4 Output of the RS(528,514) encoder

Table K.3 contains an RS(528,514) codeword. The resulting set of 20 257-bit blocks from table K.2 constitute the message portion of the codeword. The parity is computed (see 5.4.3) and is appended to the message to complete the codeword.

Table K.3 - RS(528,514) codeword output

Header <0:4>	Payload, hex <5:64>	Payload, hex <65:128>	Payload, hex <129:192>	Payload, hex <193:256>
00000	a5a3bf86d9acf5c	de55cb85df0f7ca0	e6ccff8e8212b1c6	d63bc6c309000638
00000	7e3b0ce30e0497d	dc8df31ec3ab4491	66fb9139c81cd37b	b57477d4f05e3602
00000	8fd495012947a31	e7777cf0c6d06280	44529cf4b4900528	85ce1d27750ad61b
00000	46d5c71743f5c69	c1bf62e5dc5464b5	dc6011be7ea1ed54	1cf92c450042a75f
00000	c4b940eaf3140db	77bb612a7abf401f	c22d341e90545d98	ce6daf1f248bbd6d
00000	d22d0b3f9551ed6	574686c3f9e93898	2e52628f4a1282ce	f20c86d71944aab1
00000	5133c9333808a2c	1aa825d8b817db4d	637959989f3021eb	976806641b26aae9
00000	637d4531b7ed5f2	53c3e96d3b12fb46	528c7eb8481bc969	ab8f9980d5a54559
00000	94d2abfda65cc33	94fe646efe5af02d	9a65ae5fcd88c03a	5ef08673168def9b
00000	20c871a953fffc6	ce0bb95ac263e6c1	4f6a917d1a676571	5890918c7b687d75
00000	4d2b3e43096f836	84cdd4fc48b79608	b3e4503e3c824a8c	fd6d0b1a39687929
00000	130167c08302a69	4c15ff56de92b1ad	d0c2f0d4ff0dee95	e1422ee2e8b92125
00000	e5acaf86592fcee	de799be0b903c880	2714ffbf40bc09f6	c3be97c3c285009f
00000	120faf19f606631	93007cabbb3f8c9d	ef6955f7f43df5d0	4dbd0616afe60e1f
00000	31e49b7c7f7bb5d	901d828746ceec61	71ed3c097158c224	11adb3d81e13d263
00000	a50d1a343b2394b	eab30ca27b5b34e3	90359ef711ed53d9	9b446763c8627ea8
00000	6891c0f4842b823	c4d786a25727a7fc	094fe7da31fb60cd	9f9a004de5e70767
00000	04bdd77b7cb4e7b	c598cb710558af67	fc386d1f99d3a925	4928e0b43e781893
00000	544dd3eb8b2ad6c	94462af4f583d770	8061ba9381f51f55	476d4eded7c90fcc
00000	1fc25aa6a7e0b4c	93dd968c06a56809	9768e9d1ba74d3b6	014e9dc9f13670bb

Parity, hex <0:63>	Parity, hex <64:127>	Parity, hex <128:139>
0be96448a1153f95	d8adb9032ab47d9c	d0b

K.1.5 Output of the PN-5280 scrambler

Table K.4 contains the RS(528,514) codeword from table K.3 scrambled according to the PN-5280 scrambler with the initial value defined in 5.4.4.

Table K.4 - Scrambled RS(528,514) codeword output

Scrambled Header <0:4>	Scrambled Payload, hex <5:64>	Scrambled Payload, hex <65:128>	Scrambled Payload, hex <129:192>	Scrambled Payload, hex <193:256>
11111	5a5c407933065dc	de57612f75a5d9f5	b333006e82101b6c	69c43b965cd5536d
01010	d4a4f318f1fb028	898df30396ff11c4	1c513ec637fcd37a	e020482b0af49e28
10101	d081c0ded6b85ce	21ddd470c6a2c820	eef859a1e96ff888	85c4b78b4af5ab4e
01011	1c7f79bdeeaa393	7e4033b09c5464b8	893444ee640b46ab	e9d92d14550218a0
11101	91e3e5bf0c4147a	886e1ed4c415c29f	ca0f9eb43ae4b8cf	9392647f2609172c
10111	2cd6a1bbeffe17c	fc27792d460011cd	2b524b721a52d7dc	48a679292c24bbe0
01010	8b943ccc6d37679	cfdd55dd474224d8	35dbf31860e281eb	3e3d031beedc00c9
10101	362810164816f0d	a26942873b1f11ed	ec269fed1c1c3644	ab9fc32b8e5aaeac
01010	c0f80bdf0dab3ce	c0019a1bab2cf084	4f30df0bc3a240ad	a3b08671b3d74a64
01010	899ecdfc5382abb	e1f147a439c94c77	4c227b969ccb5924	5da773157a6d07f1
01111	b27ea8ea3d450bb	acbd0b09824d54fd	444658c969ddb3e0	fb45893db69a732c
11000	b4ecd93e621d53c	0c7f2753f06db14d	c0290f9e80ec016f	4f423fa2e59edfac
00000	e66f504d26dc011	28199ab4b920377f	1714ed40b623f61f	3c5717c1b68529e0
11111	c30fb6e608ef9cd	e8ffc66bb86f8cf6	908145f7f6c23f2f	b7bcf983efe0b21e
10101	6e199e7c2024428	4fe27d78d00ecee9	713f43a9d151c4db	647249fde2b9d24a
00111	25f6b5db24232a0	14be5309d0a5d4a3	443589dd6ffd43c2	cfbd8ddc7acf8ba8
01000	4b6f4021fbc47d3	5182780849b2f024	080d67f224ac13cd	9f10a4aeb03ad22e
11100	84edb887eb1e084	3b4b81dea40eb60d	17a86ac51982d390	1829b4e14084b76f
11101	015053e354ff0a9	c12bd06c007e7dd0	eaf4e7fbbe4a9df5	32456bd478c3f79b
01011	f528b1cb27f7dbe	55c639d7e374e3e6	a6489c3f10746891	9407e7153e322bab

Scrambled Parity, hex <0:63>	Scrambled Parity, hex <64:127>	Scrambled Parity, hex <128:139>
e029dbcd41d47ad0	2343daf19112f025	ce5

K.2 32GFC - Idle and LPI Patterns with 64B/66B Scrambler Bypass Enabled (scr_bypass=1)

K.2.1 Overview

This annex provides example RS-FEC codewords produced by 64B/66B to 256B/257B transcoding (see 5.4.2), Reed-Solomon encoding (see 5.4.3) and PN-5280 scrambling (see 5.4.4) computations. Results of each computation are provided in a tabular form. The contents of the tables are transmitted from left to right within each row starting from the top row and ending at the bottom row. The tables contain both binary and hexadecimal representations of the data. For the hexadecimal representation, the most significant bit of each hex symbol is transmitted first.

K.2.2 Input to the 64B/66B to 256B/257B transcoder

Table K.5 contains a sequence of 80 66-bit blocks corresponding to the PCS transmission of Idle Control characters with the 64B/66B scrambler (see 5.3.3) bypassed.

Table K.5 - 64B/66B to 256B/257B transcoder Idle input

Sync <0:1>	64-bit payload, hex <2:65>	Sync <0:1>	64-bit payload, hex <2:65>	Sync <0:1>	64-bit payload, hex <2:65>	Sync <0:1>	64-bit payload, hex <2:65>
10	7800000000000000	10	7800000000000000	10	7800000000000000	10	7800000000000000
10	7800000000000000	10	7800000000000000	10	7800000000000000	10	7800000000000000
10	7800000000000000	10	7800000000000000	10	7800000000000000	10	7800000000000000
10	7800000000000000	10	7800000000000000	10	7800000000000000	10	7800000000000000
10	7800000000000000	10	7800000000000000	10	7800000000000000	10	7800000000000000
10	7800000000000000	10	7800000000000000	10	7800000000000000	10	7800000000000000
10	7800000000000000	10	7800000000000000	10	7800000000000000	10	7800000000000000
10	7800000000000000	10	7800000000000000	10	7800000000000000	10	7800000000000000
10	7800000000000000	10	7800000000000000	10	7800000000000000	10	7800000000000000
10	7800000000000000	10	7800000000000000	10	7800000000000000	10	7800000000000000
10	7800000000000000	10	7800000000000000	10	7800000000000000	10	7800000000000000
10	7800000000000000	10	7800000000000000	10	7800000000000000	10	7800000000000000
10	7800000000000000	10	7800000000000000	10	7800000000000000	10	7800000000000000
10	7800000000000000	10	7800000000000000	10	7800000000000000	10	7800000000000000
10	7800000000000000	10	7800000000000000	10	7800000000000000	10	7800000000000000
10	7800000000000000	10	7800000000000000	10	7800000000000000	10	7800000000000000
10	7800000000000000	10	7800000000000000	10	7800000000000000	10	7800000000000000
10	7800000000000000	10	7800000000000000	10	7800000000000000	10	7800000000000000
10	7800000000000000	10	7800000000000000	10	7800000000000000	10	7800000000000000
10	7800000000000000	10	7800000000000000	10	7800000000000000	10	7800000000000000
10	7800000000000000	10	7800000000000000	10	7800000000000000	10	7800000000000000

Table K.6 contains a sequence of 80 66-bit blocks corresponding to the PCS transmission of LPI Control characters with the 64B/66B scrambler (see 5.3.3) bypassed.

Table K.6 - 64B/66B to 256B/257B transcoder LPI input

Sync <0:1>	64-bit payload, hex <2:65>	Sync <0:1>	64-bit payload, hex <2:65>	Sync <0:1>	64-bit payload, hex <2:65>	Sync <0:1>	64-bit payload, hex <2:65>
10	7860c183060c1830	10	7860c183060c1830	10	7860c183060c1830	10	7860c183060c1830
10	7860c183060c1830	10	7860c183060c1830	10	7860c183060c1830	10	7860c183060c1830
10	7860c183060c1830	10	7860c183060c1830	10	7860c183060c1830	10	7860c183060c1830
10	7860c183060c1830	10	7860c183060c1830	10	7860c183060c1830	10	7860c183060c1830
10	7860c183060c1830	10	7860c183060c1830	10	7860c183060c1830	10	7860c183060c1830
10	7860c183060c1830	10	7860c183060c1830	10	7860c183060c1830	10	7860c183060c1830
10	7860c183060c1830	10	7860c183060c1830	10	7860c183060c1830	10	7860c183060c1830
10	7860c183060c1830	10	7860c183060c1830	10	7860c183060c1830	10	7860c183060c1830
10	7860c183060c1830	10	7860c183060c1830	10	7860c183060c1830	10	7860c183060c1830
10	7860c183060c1830	10	7860c183060c1830	10	7860c183060c1830	10	7860c183060c1830
10	7860c183060c1830	10	7860c183060c1830	10	7860c183060c1830	10	7860c183060c1830
10	7860c183060c1830	10	7860c183060c1830	10	7860c183060c1830	10	7860c183060c1830
10	7860c183060c1830	10	7860c183060c1830	10	7860c183060c1830	10	7860c183060c1830
10	7860c183060c1830	10	7860c183060c1830	10	7860c183060c1830	10	7860c183060c1830
10	7860c183060c1830	10	7860c183060c1830	10	7860c183060c1830	10	7860c183060c1830
10	7860c183060c1830	10	7860c183060c1830	10	7860c183060c1830	10	7860c183060c1830
10	7860c183060c1830	10	7860c183060c1830	10	7860c183060c1830	10	7860c183060c1830
10	7860c183060c1830	10	7860c183060c1830	10	7860c183060c1830	10	7860c183060c1830
10	7860c183060c1830	10	7860c183060c1830	10	7860c183060c1830	10	7860c183060c1830
10	7860c183060c1830	10	7860c183060c1830	10	7860c183060c1830	10	7860c183060c1830

K.2.3 Output of the 64B/66B to 256B/257B transcoder

Table K.7 contains a series of 257-bit transmission words. Each row of the table is a set of 4 66-bit blocks, representing Idle control characters output by the PCS (see table K.5), that has been converted to one 257-bit block (see 5.4.2). The resulting set of 20 257-bit blocks is input to the RS(528,514) encoder.

Table K.7 - 64B/66B to 256B/257B transcoder Idle output

Header <0:4>	Payload, hex <5:64>	Payload, hex <65:128>	Payload, hex <129:192>	Payload, hex <193:256>
00000	700000000000000	7800000000000000	7800000000000000	7800000000000000
00000	700000000000000	7800000000000000	7800000000000000	7800000000000000
00000	700000000000000	7800000000000000	7800000000000000	7800000000000000
00000	700000000000000	7800000000000000	7800000000000000	7800000000000000
00000	700000000000000	7800000000000000	7800000000000000	7800000000000000
00000	700000000000000	7800000000000000	7800000000000000	7800000000000000
00000	700000000000000	7800000000000000	7800000000000000	7800000000000000
00000	700000000000000	7800000000000000	7800000000000000	7800000000000000
00000	700000000000000	7800000000000000	7800000000000000	7800000000000000
00000	700000000000000	7800000000000000	7800000000000000	7800000000000000
00000	700000000000000	7800000000000000	7800000000000000	7800000000000000
00000	700000000000000	7800000000000000	7800000000000000	7800000000000000
00000	700000000000000	7800000000000000	7800000000000000	7800000000000000
00000	700000000000000	7800000000000000	7800000000000000	7800000000000000
00000	700000000000000	7800000000000000	7800000000000000	7800000000000000
00000	700000000000000	7800000000000000	7800000000000000	7800000000000000
00000	700000000000000	7800000000000000	7800000000000000	7800000000000000
00000	700000000000000	7800000000000000	7800000000000000	7800000000000000
00000	700000000000000	7800000000000000	7800000000000000	7800000000000000
00000	700000000000000	7800000000000000	7800000000000000	7800000000000000

Table K.8 contains a series of 257-bit transmission words. Each row of the table is a set of 4 66-bit blocks, representing LPI control characters output by the PCS (see table K.6), that has been converted to one 257-bit block (see 5.4.2). The resulting set of 20 257-bit blocks is input to the RS(528,514) encoder.

Table K.8 - 64B/66B to 256B/257B transcoder LPI output

Header <0:4>	Payload, hex <5:64>	Payload, hex <65:128>	Payload, hex <129:192>	Payload, hex <193:256>
00000	760c183060c1830	7860c183060c1830	7860c183060c1830	7860c183060c1830
00000	760c183060c1830	7860c183060c1830	7860c183060c1830	7860c183060c1830
00000	760c183060c1830	7860c183060c1830	7860c183060c1830	7860c183060c1830
00000	760c183060c1830	7860c183060c1830	7860c183060c1830	7860c183060c1830
00000	760c183060c1830	7860c183060c1830	7860c183060c1830	7860c183060c1830
00000	760c183060c1830	7860c183060c1830	7860c183060c1830	7860c183060c1830
00000	760c183060c1830	7860c183060c1830	7860c183060c1830	7860c183060c1830
00000	760c183060c1830	7860c183060c1830	7860c183060c1830	7860c183060c1830
00000	760c183060c1830	7860c183060c1830	7860c183060c1830	7860c183060c1830
00000	760c183060c1830	7860c183060c1830	7860c183060c1830	7860c183060c1830
00000	760c183060c1830	7860c183060c1830	7860c183060c1830	7860c183060c1830
00000	760c183060c1830	7860c183060c1830	7860c183060c1830	7860c183060c1830
00000	760c183060c1830	7860c183060c1830	7860c183060c1830	7860c183060c1830
00000	760c183060c1830	7860c183060c1830	7860c183060c1830	7860c183060c1830
00000	760c183060c1830	7860c183060c1830	7860c183060c1830	7860c183060c1830
00000	760c183060c1830	7860c183060c1830	7860c183060c1830	7860c183060c1830
00000	760c183060c1830	7860c183060c1830	7860c183060c1830	7860c183060c1830
00000	760c183060c1830	7860c183060c1830	7860c183060c1830	7860c183060c1830
00000	760c183060c1830	7860c183060c1830	7860c183060c1830	7860c183060c1830

K.2.4 Output of the RS(528,514) encoder

Table K.9 contains an RS(528,514) codeword output result using input from table K.7. The resulting set of 20 257-bit blocks constitute the message portion of the codeword. The parity is computed (see 5.4.3) and is appended to the message to complete the codeword.

Table K.9 - RS(528,514) codeword Idle output

Header <0:4>	Payload, hex <5:64>	Payload, hex <65:128>	Payload, hex <129:192>	Payload, hex <193:256>
00000	700000000000000	7800000000000000	7800000000000000	7800000000000000
00000	700000000000000	7800000000000000	7800000000000000	7800000000000000
00000	700000000000000	7800000000000000	7800000000000000	7800000000000000
00000	700000000000000	7800000000000000	7800000000000000	7800000000000000
00000	700000000000000	7800000000000000	7800000000000000	7800000000000000
00000	700000000000000	7800000000000000	7800000000000000	7800000000000000
00000	700000000000000	7800000000000000	7800000000000000	7800000000000000
00000	700000000000000	7800000000000000	7800000000000000	7800000000000000
00000	700000000000000	7800000000000000	7800000000000000	7800000000000000
00000	700000000000000	7800000000000000	7800000000000000	7800000000000000
00000	700000000000000	7800000000000000	7800000000000000	7800000000000000
00000	700000000000000	7800000000000000	7800000000000000	7800000000000000
00000	700000000000000	7800000000000000	7800000000000000	7800000000000000
00000	700000000000000	7800000000000000	7800000000000000	7800000000000000
00000	700000000000000	7800000000000000	7800000000000000	7800000000000000
00000	700000000000000	7800000000000000	7800000000000000	7800000000000000
00000	700000000000000	7800000000000000	7800000000000000	7800000000000000
00000	700000000000000	7800000000000000	7800000000000000	7800000000000000
00000	700000000000000	7800000000000000	7800000000000000	7800000000000000
00000	700000000000000	7800000000000000	7800000000000000	7800000000000000
00000	700000000000000	7800000000000000	7800000000000000	7800000000000000
Parity, hex <0:63>	**Parity, hex <64:127>**	**Parity, hex <128:139>**		
d2dc96cbdac17213	73bea79e7d8a84cb	e1c		

Table K.10 contains an RS(528,514) codeword output result using input from table K.8. The resulting set of 20 257-bit blocks constitute the message portion of the codeword. The parity is computed (see 5.4.3) and is appended to the message to complete the codeword.

Table K.10 - RS(528,514) codeword LPI output

Header <0:4>	Payload, hex <5:64>	Payload, hex <65:128>	Payload, hex <129:192>	Payload, hex <193:256>
00000	760c183060c1830	7860c183060c1830	7860c183060c1830	7860c183060c1830
00000	760c183060c1830	7860c183060c1830	7860c183060c1830	7860c183060c1830
00000	760c183060c1830	7860c183060c1830	7860c183060c1830	7860c183060c1830
00000	760c183060c1830	7860c183060c1830	7860c183060c1830	7860c183060c1830
00000	760c183060c1830	7860c183060c1830	7860c183060c1830	7860c183060c1830
00000	760c183060c1830	7860c183060c1830	7860c183060c1830	7860c183060c1830
00000	760c183060c1830	7860c183060c1830	7860c183060c1830	7860c183060c1830
00000	760c183060c1830	7860c183060c1830	7860c183060c1830	7860c183060c1830
00000	760c183060c1830	7860c183060c1830	7860c183060c1830	7860c183060c1830
00000	760c183060c1830	7860c183060c1830	7860c183060c1830	7860c183060c1830
00000	760c183060c1830	7860c183060c1830	7860c183060c1830	7860c183060c1830
00000	760c183060c1830	7860c183060c1830	7860c183060c1830	7860c183060c1830
00000	760c183060c1830	7860c183060c1830	7860c183060c1830	7860c183060c1830
00000	760c183060c1830	7860c183060c1830	7860c183060c1830	7860c183060c1830
00000	760c183060c1830	7860c183060c1830	7860c183060c1830	7860c183060c1830
00000	760c183060c1830	7860c183060c1830	7860c183060c1830	7860c183060c1830
00000	760c183060c1830	7860c183060c1830	7860c183060c1830	7860c183060c1830
00000	760c183060c1830	7860c183060c1830	7860c183060c1830	7860c183060c1830
00000	760c183060c1830	7860c183060c1830	7860c183060c1830	7860c183060c1830
00000	760c183060c1830	7860c183060c1830	7860c183060c1830	7860c183060c1830
Parity, hex <0:63>	**Parity, hex <64:127>**	**Parity, hex <128:139>**		
539673db0d14ee06	f37c97404d327cd7	b96		

K.2.5 Output of the PN-5280 scrambler

Table K.11 contains the RS(528,514) codeword from table K.9 scrambled according to the PN-5280 scrambler with the initial value defined in 5.4.4.

Table K.11 - FEC block scrambled with PN-5280 sequence for IDLE

Header <0:4>	Payload, hex <5:64>	Payload, hex <65:128>	Payload, hex <129:192>	Payload, hex <193:256>
11111	8ffffffeaaaa80	7802aaaaaaaaa555	2dffffe00002aaaa	c7fffd5555d55555
01010	da9ffffbffff955	2d00001d55545555	02aaaffffe00001	2d543ffffaaaa82a
10101	2f5555dffffffff	beaaa8800072aaa0	d2aac5555dfffda0	780aaaac3fff7d55
01011	2aaabeaaad5fffa	c7ff51554000000d	2d5455501aaaabff	8d2001515540bfff
11101	255aa555ff554a1	87d57ffebeaa8280	7022aaaaaab0e557	25ffcb600282aa41
10111	8efbaa847aaffaa	d361ffeebfe92955	7d0029fd50405512	c2aafffe35601151
01010	aaa7f5ff553fc55	ad757005ff55ff95	2ea2aa80ffd2a000	d155057ff5faaa20
10101	25555527fffbaff	89aaabea000deaab	c6aae1555407ff2d	78105aab5bffebf5
01010	242aa022abf7ffd	2cfffe75557600a9	ad5571540e2a8097	85400002a55aa5ff
01010	d956bc55007d57d	57fafefefbaaaab6	7b48eaeb86ac3c55	7d37e29901057a84
01111	8f5596a9342a88d	5070dff5cafac2f5	8fa208f7555ff96c	7e2882278ff20a05
11000	d7edbefee11ff55	386ad8052eff00e0	68ebff4a7fe1effa	d60011400d27fe89
00000	73c3ffcb7ff3cff	8e6001540023ffff	480012fff69fffe9	87e980027400297f
11111	a10019fffee9ffc	03ffbac00350006b	07e8100002ffcaff	8201ff954006bc01
10101	2ffd05005f5ff75	a7ffffff96c02288	78d27fa0a00906ff	0ddffa25fcaa0029
00111	f0fbafef1f00beb	860d5fababfee040	ac00172a7e10101b	2cf9eabfb2adf500
01000	53fe80d57fefff0	ed55feaa1e9557d8	7942802815577300	788aa4e355ddd549
11100	f0506ffc97aaeff	86d34aafa156196a	939007da80517ab5	290154557efcaffc
11101	251d8008dfd5dc5	2d6dfa98f5fdaaa0	12955d683fbf82a0	0d28250aaf0af857
01011	9aeaeb6d80176f2	be1baf5be5d18bef	492075eeaa00bb27	ed497adccf045b10

Parity, hex <0:63>	Parity, hex <64:127>	Parity, hex <128:139>
391c294e3a003756	8850c46cc62c0972	ff2

Table K.12 contains the RS(528,514) codeword from table K.10 scrambled according to the PN-5280 scrambler with the initial value defined in 5.4.4.

Table K.12 - FEC block scrambled with PN-5280 sequence for LPI

Header <0:4>	Payload, hex <5:64>	Payload, hex <65:128>	Payload, hex <129:192>	Payload, hex <193:256>
11111	89f3e7cf8a6b2b0	78626b29aca6bd65	2d9f3e63060eb29a	c79f3cd653d94d65
01010	dc93e7cb9f3e165	2d60c19e53584d65	02ca6e7cf9ec1831	2d34fe7cfca6b01a
10101	29594def9f3e7cf	beca6903067eb290	d2ca04d65bf3e590	786a6b2f39f36565
01011	2ca6a69acd9e7ca	c79f90d6460c183d	2d3494d31ca6b3cf	8d40c0d2534ca7cf
11101	2356bd659f94c91	87b5be7db8a69ab0	70426b29acbcfd67	259f0ae3048eb271
10111	88f7b2b41a6e79a	d3013e6db9e53165	7d60e87e564c4d22	c2ca3e7d336c0961
01010	acabedcf35fe465	ad15b186f959e7a5	2ec26b03f9deb830	d135c4fcf3f6b210
10101	23594d179f3a2cf	89ca6a690601f29b	c6ca20d6520be71d	78709b285df3f3c5
01010	2226b812cb367cd	2c9f3ff6537a1899	ad35b0d7082698a7	8520c181a356bdcf
01010	df5aa46560bcd4d	579a3f7dfda6b286	7b282b6880a02465	7d57231a070962b4
01111	89598e9954eb0bd	50101e76ccf6dac5	8fc2c9745353e15c	7e4843a489fe1235
11000	d1e1a6ce81de765	380a198628f318d0	688b3ec979edf7ca	d660d0c30b2be6b9
00000	75cfe7fb1f324cf	8e00c0d7062fe7cf	4860d37cf093e7d9	87894181720c314f
11111	a70c01cf9e287cc	039f7b43055c185b	0788d18304f3d2cf	82613e16460aa431
10101	29f11d303f9e745	a79f3e7c90cc3ab8	78b2be23a6051ecf	0dbf3ba6faa61819
00111	f6f7b7df7fc13db	866d9e28adf2f870	ac60d6a9781c082b	2c992b3cb4a1ed30
01000	55f298e51f2e7c0	ed353f2918994fe8	792241ab135b6b30	78ea656053d1cd79
11100	f65c77ccf76b6cf	86b38b2ca75a015a	93f0c659865d6285	296195d678f0b7cc
11101	23119838bf145f5	2d0d3b1bf3f1b290	12f59ceb39b39a90	0d48e489a906e067
01011	9ce6f35de0d6ec2	be7b6ed8e3dd93df	4940b46dac0ca317	ed29bb5fc9084320

Parity, hex <0:63>	Parity, hex <64:127>	Parity, hex <128:139>
b856cc5eedd5ab43	0892f4b2f694f16e	a78

K.3 128GFC

See IEEE 802.3-2015, Annex 91A, Sections 91A.1 and 91A.2 for example RS-FEC codewords.

K.4 64GFC - Idle Pattern with 64B/66B Scrambler Bypass Disabled (scr_bypass=0) and Precoding Disabled

K.4.1 Overview

This annex provides a transmitted bit stream produced by 64B/66B to 256B/257B transcoding (see

5.5.2), Reed-Solomon encoding (see 5.5.4), and Gray mapping (see 5.5.5) computations. Results of each computation are provided in a tabular form. The contents of the tables are transmitted from left to right within each row starting from the top row and ending at the bottom row. The tables contain both binary and hexadecimal representations of the data. For the hexadecimal representation, the most significant bit of each hex symbol is transmitted first.

K.4.2 Input to the 64B/66B to 256B/257B transcoder

Table K.1 contains a sequence of 80 66-bit blocks corresponding to the PCS transmission of Idle control characters. The initial value of the scrambler was set to 0x0ea1e77eed301ec, which corresponds to bits 6 to 63 of the first 64-bit payload in the first row of 802.3-2015, Annex 74A, Table 74A-2. Bit 6 is assigned to S57 and bit 63 is assigned to S0 (see 5.3.3).

K.4.3 Output of the 64B/66B to 256B/257B transcoder

Table K.13 contains a series of 257-bit transmission words. Each row of the table is a set of 4 66-bit blocks, representing Idle control characters output by the PCS (see Table K.1), that has been converted to one 257-bit block with scrambling applied to the 5-bit Header (see 5.5.2). The resulting set of 20 257-bit blocks is input to the RS(544,514) encoder.

Table K.13 - 64B/66B to 256B/257B transcoder output

Header <0:4>	Payload, hex <5:64>	Payload, hex <65:128>	Payload, hex <129:192>	Payload, hex <193:256>
00101	a5a3bf86d9acf5c	de55cb85df0f7ca0	e6ccff8e8212b1c6	d63bc6c309000638
11110	7e3b0ce30e0497d	dc8df31ec3ab4491	66fb9139c81cd37b	b57477d4f05e3602
01111	8fd495012947a31	e7777cf0c6d06280	44529cf4b4900528	85ce1d27750ad61b
00110	46d5c71743f5c69	c1bf62e5dc5464b5	dc6011be7ea1ed54	1cf92c450042a75f
00100	c4b940eaf3140db	77bb612a7abf401f	c22d341e90545d98	ce6daf1f248bbd6d
10010	d22d0b3f9551ed6	574686c3f9e93898	2e52628f4a1282ce	f20c86d71944aab1
10001	5133c9333808a2c	1aa825d8b817db4d	637959989f3021eb	976806641b26aae9
00011	637d4531b7ed5f2	53c3e96d3b12fb46	528c7eb8481bc969	ab8f9980d5a54559
10100	94d2abfda65cc33	94fe646efe5af02d	9a65ae5fcd88c03a	5ef08673168def9b
00000	20c871a953fffc6	ce0bb95ac263e6c1	4f6a917d1a676571	5890918c7b687d75

Header <0:4>	Payload, hex <5:64>	Payload, hex <65:128>	Payload, hex <129:192>	Payload, hex <193:256>
01101	4d2b3e43096f836	84cdd4fc48b79608	b3e4503e3c824a8c	fd6d0b1a39687929
10011	130167c08302a69	4c15ff56de92b1ad	d0c2f0d4ff0dee95	e1422ee2e8b92125
00101	e5acaf86592fcee	de799be0b903c880	2714ffbf40bc09f6	c3be97c3c285009f
10010	120faf19f606631	93007cabbb3f8c9d	ef6955f7f43df5d0	4dbd0616afe60e1f
10001	31e49b7c7f7bb5d	901d828746ceec61	71ed3c097158c224	11adb3d81e13d263
00101	a50d1a343b2394b	eab30ca27b5b34e3	90359ef711ed53d9	9b446763c8627ea8
01000	6891c0f4842b823	c4d786a25727a7fc	094fe7da31fb60cd	9f9a004de5e70767
00100	04bdd77b7cb4e7b	c598cb710558af67	fc386d1f99d3a925	4928e0b43e781893
10100	544dd3eb8b2ad6c	94462af4f583d770	8061ba9381f51f55	476d4eded7c90fcc
11111	1fc25aa6a7e0b4c	93dd968c06a56809	9768e9d1ba74d3b6	014e9dc9f13670bb

K.4.4 Output of the RS(544,514) encoder

Table K.14 contains an RS(544,514) codeword. The resulting set of 20 257-bit blocks from Table K.13 constitute the message portion of the codeword. The parity is computed (see 5.5.4) and is appended to the message to complete the codeword.

Table K.14 - RS(544,514) codeword output

Header <0:4>	Payload, hex <5:64>	Payload, hex <65:128>	Payload, hex <129:192>	Payload, hex <193:256>
00101	a5a3bf86d9acf5c	de55cb85df0f7ca0	e6ccff8e8212b1c6	d63bc6c309000638
11110	7e3b0ce30e0497d	dc8df31ec3ab4491	66fb9139c81cd37b	b57477d4f05e3602
01111	8fd495012947a31	e7777cf0c6d06280	44529cf4b4900528	85ce1d27750ad61b
00110	46d5c71743f5c69	c1bf62e5dc5464b5	dc6011be7ea1ed54	1cf92c450042a75f
00100	c4b940eaf3140db	77bb612a7abf401f	c22d341e90545d98	ce6daf1f248bbd6d
10010	d22d0b3f9551ed6	574686c3f9e93898	2e52628f4a1282ce	f20c86d71944aab1
10001	5133c9333808a2c	1aa825d8b817db4d	637959989f3021eb	976806641b26aae9
00011	637d4531b7ed5f2	53c3e96d3b12fb46	528c7eb8481bc969	ab8f9980d5a54559
10100	94d2abfda65cc33	94fe646efe5af02d	9a65ae5fcd88c03a	5ef08673168def9b
00000	20c871a953fffc6	ce0bb95ac263e6c1	4f6a917d1a676571	5890918c7b687d75
01101	4d2b3e43096f836	84cdd4fc48b79608	b3e4503e3c824a8c	fd6d0b1a39687929
10011	130167c08302a69	4c15ff56de92b1ad	d0c2f0d4ff0dee95	e1422ee2e8b92125

Table K.14 - RS(544,514) codeword output

Header <0:4>	Payload, hex <5:64>	Payload, hex <65:128>	Payload, hex <129:192>	Payload, hex <193:256>
00101	e5acaf86592fcee	de799be0b903c880	2714ffbf40bc09f6	c3be97c3c285009f
10010	120faf19f606631	93007cabbb3f8c9d	ef6955f7f43df5d0	4dbd0616afe60e1f
10001	31e49b7c7f7bb5d	901d828746ceec61	71ed3c097158c224	11adb3d81e13d263
00101	a50d1a343b2394b	eab30ca27b5b34e3	90359ef711ed53d9	9b446763c8627ea8
01000	6891c0f4842b823	c4d786a25727a7fc	094fe7da31fb60cd	9f9a004de5e70767
00100	04bdd77b7cb4e7b	c598cb710558af67	fc386d1f99d3a925	4928e0b43e781893
10100	544dd3eb8b2ad6c	94462af4f583d770	8061ba9381f51f55	476d4eded7c90fcc
11111	1fc25aa6a7e0b4c	93dd968c06a56809	9768e9d1ba74d3b6	014e9dc9f13670bb
Parity, hex <0:63>	**Parity, hex <64:127>**	**Parity, hex <128:191>**	**Parity, hex <192:255>**	**Parity, hex <256:299>**
d6983839edc3e5ac	c3cb45691ddba6cb	c26d756ea6f5b73d	249e30f415aa60b1	5743dc81c21

Table K.15 is the hexadecimal reformatting of the values appearing in Table K.14.

Table K.15 - RS(544,514) codeword output in hexadecimal format

Payload. hex <0:63>	Payload, hex <64:127>	Payload, hex <128:191>	Payload, hex <129:255>	Payload, hex <256:319>
2d2d1dfc36cd67ae	6f2ae5c2ef87be50	73667fc7410958e3	6b1de3618480031c	79f8ec338c38125f
77237cc7b0ead124	59bee44e720734de	ed5d1df53c178d80	9f1fa92a02528f46	3ceeef9e18da0c50
088a539e969200a5	10b9c3a4eea15ac3	6646d5c71743f5c6	9c1bf62e5dc5464b	5dc6011be7ea1ed5
41cf92c450042a75	f2625ca075798a06	dbbddb0953d5fa00	fe1169a0f482a2ec	c6736d78f9245deb
6cb48b42cfe5547b	595d1a1b0fe7a4e2	60b9498a3d284a0b	3bc8321b5c6512aa	c62a267926670114
5835504bb1702fb6	9ac6f2b3313e6043	d72ed00cc8364d55	d23637d4531b7ed5	f253c3e96d3b12fb
46528c7eb8481bc9	69ab8f9980d5a545	59a4a6955fed32e6	19ca7f32377f2d78	16cd32d72fe6c460
1d2f7843398b46f7	cd808321c6a54fff	f1b382ee56b098f9	b053daa45f4699d9	5c562424631eda1f
5d5a9a567c8612df	06d099ba9f8916f2	c1167c8a07c79049	519fada163472d0f	2533130167c08302
a694c15ff56de92b	1add0c2f0d4ff0de	e95e1422ee2e8b92	1252f2d657c32c97	e776f3ccdf05c81e
440138a7fdfa05e0	4fb61df4be1e1428	04fc8483ebc67d81	98c64c01f2aeecfe	3277bda557dfd0f7
d74136f4185abf98	387e263c936f8fef	76bb203b050e8d9d	d8c2e3da7812e2b1	8448235b67b03c27
a4c65a50d1a343b2	394beab30ca27b5b	34e390359ef711ed	53d99b446763c862	7ea843448e07a421
5c11e26bc3512b93	d3fe04a7f3ed18fd	b066cfcd0026f2f3	83b39012f75dedf2	d39ef16632dc4156
2bd9ff0e1b47e674	ea49524a382d0f9e	0624e8a89ba7d716	55ad9288c55e9eb0	7aee100c3752703e
a3eaa8eda9dbdaf9	21f99f1fc25aa6a7	e0b4c93dd968c06a	568099768e9d1ba7	4d3b6014e9dc9f13
670bbd6983839edc	3e5acc3cb45691dd	ba6cbc26d756ea6f	5b73d249e30f415a	a60b15743dc81c21

K.4.5 Output of the Gray mapper

Table K.16 contains the result of Gray mapping (see 5.5.5). The Gray mapping function transforms pairs of bits {A,B} (where A is the earliest bit of the pair and B is the latest bit of the pair) received from Table K.15 into pairs of bits {GMA,GMB} according to the following table:

Input {A,B}		Output {GMA,GMB}	
Binary	**Quaternary**	**Binary**	**Quaternary**
{0,0}	0	{0,0}	0
{0,1}	1	{0,1}	1
{1,0}	2	{1,1}	3
{1,1}	3	{1,0}	2

When precoding is disabled, the resulting set of 2720 PAM4 symbols illustrated in Table K.16 is input to the PAM4 Transmitter for output on the physical medium.

Table K.16 - Gray mapper output

Payload. hex <0:63>	Payload, hex <64:127>	Payload, hex <128:191>	Payload, hex <129:255>	Payload, hex <256:319>
393919a8278976fb	7a3fb583bac6eb50	62776a86410d5cb2	7e19b271c4c00218	6dacb822c82c135a
66326886e0bf9134	5debb44b6306249b	b95919a52816c9c0	da1afd3f0353ca47	28bbbadb1c9f0850
0ccf52dbd7d300f5	10ed82f4bbf15f82	774795861642a587	d81ea73b5985474e	5987011eb6bf1b95
418ad38450043f65	a37358f0656dcf07	9ee99e0d5295af00	ab117df0a4c3f3b8	8762796cad3459be
78e4ce438ab5546e	5d591f1e0ab6f4b3	70ed4dcf293c4f0e	2e8c231e587513ff	873f376d37760114
5c25504ee1603ae7	df87a3e2212b7042	963b90088c274955	93272694521e6b95	a35282bd792e13ae
4753c86bec4c1e8d	7dfecaddc095f545	5df4f7d55ab923b7	1d8f6a23266a396c	178923963ab78470
193a6c422dce47a6	89c0c23187f54aaa	a1e2c3bb57e0dcad	e0529ff45a47dd9d	58573434721b9f1a
595fdf5768c7139a	0790ddefdacd17a3	811768cf0686d04d	51daf9f17246390a	352212017680c203
f7d4815aa579bd3e	1f99083a094aa09b	bd5b1433bb3bced3	1353a397568238d6	b667a2889a058c1b
44012cf6a9af05b0	4ae719a4eb1b143c	04a8c4c2be8769c1	dc874801a3fbb8ab	2366e9f5569a90a6
964127a41c5feadc	2c6b3728d27acaba	67ee302e050bc9d9	9c83b29f6c13b3e1	c44c325e76e02836
f4875f5091f242e3	2d4ebfe208f36e5e	24b2d025dba611b9	529dde4476728c73	6bfc4244cb06f431
5811b37e82513ed2	92ab04f6a2b91ca9	e0778a890037a3a2	c2e2d013a659b9a3	92dba17723984157
3e9daa0b1e46b764	bf4d534f2c390adb	0734bcfcdef69617	55f9d3cc855bdbe0	6fbb10082653602b
f2bffcb9fd9e9fad	31adda1a835ff7f6	b0e48d299d7c807f	57c0dd67cbd91ef6	492e7014bd98da12
760ee97dc2c2db98	2b5f8828e457d199	ef78e8379657bf7a	5e62934db20a415f	f70e1564298c1831

The first 32 PAM4 symbols contained in the upper left cell of Table K.16 sent to the PAM4 Transmitter (left to right) are the following:

{0,3,2,1,0,3,2,1,0,1,2,1,2,2,2,0,0,2,1,3,2,0,2,1,1,3,1,2,3,3,2,3}

K.5 64GFC - Idle Pattern with 64B/66B Scrambler Bypass Disabled (scr_bypass=0) and Precoding Enabled

K.5.1 Overview

This annex provides a transmitted bit stream produced by 64B/66B to 256B/257B transcoding (see 5.5.2), Reed-Solomon encoding (see 5.5.4), Gray mapping (see 5.5.5) and precoding (see 5.5.6) computations. Computation results are provided in a tabular form. The contents of the tables are transmitted from left to right within each row starting from the top row and ending at the bottom row. The tables contain both binary and hexadecimal representations of the data. For the hexadecimal representation, the most significant bit of each hex symbol is transmitted first.

Refer to Annex K.4 for results of 64B/66B to 256B/257B transcoding (see Table K.13), Reed-Solomon encoding (see Table K.14), and Gray mapping (see Table K.16).

K.5.2 Output of the precoder

When precoding is enabled, the resulting set of 2720 PAM4 symbols output by the Gray mapper (refer to Table K.16) is input to the precoder. For j = 1 to 2720, the precoding function transforms each PAM4 symbol G(j) received from Table K.16 into a PAM4 symbol P(j) according to the following algorithm:

P(j) = (G(j) - P(j-1)) mod 4

The initial output value of the precoder P(0) was set to 0. Table K.17 contains the result of precoding (see 5.5.6). The resulting set of 2720 PAM4 symbols is input to the PAM4 Transmitter for output on the physical medium.

Table K.17 - Precoder output

Payload. hex <0:63>	Payload, hex <64:127>	Payload, hex <128:191>	Payload, hex <129:255>	Payload, hex <256:319>
3e94148a860b9263	95cc91763f05891d	286c5578740ee7c2	cf4bc2c1adaaa817	8e27ca827df01c48
529f8a05809941c7	b1896d0929d287e3	cbbebe2e8ab8d4dd	bf48ce99dc430879	fd63c8e34d4c0aea
a70c4249b9b6aa6e	b724a8c7c99ee602	c6d3ee05efa884ac	e0188696e17bac72	e179deb23899e3ee
de08e97aeaadcc51	5c691737845b0c06	18fe180ee8bbf377	fc1ece6a2da99c97	d382cb8d5b6d1498
60fa72dca23bbaf2	e44b4c1808926d69	372471a68b67a6a5	f20df6b2e06eb666	0699c6f1c6c5deba
e7511d0f2b803f2c	e606298281fc6adf	ef63eaa0a753a111	4353521042b2fcbb	f6e8a89b9425e958
791cd7898d0de571	3198d5b1aa119104	4e6d93111561f639	e4a6ff5c2f883ef0	13d42945c893d06a

Payload. hex <0:63>	Payload, hex <64:127>	Payload, hex <128:191>	Payload, hex <129:255>	Payload, hex <256:319>
be9527a824d87952	0b00df6bd33ba222	2b28dc96ecf71a24	f7b54cc7bface4b1	17b9c76d35e3e6bf
bee64c46fdac1cbf	7940e4f315a413f6	01ec570c0578eadb	b4e2619ec2d29408	3b5f42ab9200df76
6ced744884616432	b3e1d762a10880bc	9bbc10363c3cd8e9	e91c83ec4575ca45	6f8628a0bf7bdabc
7aab5a6ffe26ae37	a2534bfa56bc1030	07fdada898ac54de	4d790aabf663ca23	5c5254c44548b7f8
b8742c874d1988e7	5afc39fdb53f0895	2cf29df2aea30b14	b0a968b38de96981	ad0dc2e538f7576f
3a06e6ea1e687583	5ba5665f7d9c584f	509f1dfb162f4161	1fe4e50792c20d36	fccd02d0d6af3a9e
e01e36cfdfb43242	1ffc0738823eb08b	2ac608a1ddc6295f	025f1de952e1615c	b5bc8139f617abb9
cfe48809e5056c50	990ee90c2761d5bc	06909a6718c545ec	44cb1cda0449bcf7	8c96b77df8438023
356667cb314fe624	348e481576e66cc5	6a50a4214ecd7799	1300e45309beb26f	a1f2c0109be0e2b5
380f2131a8df1617	56e60a8a5046414b	26ca576cb8463395	185fe90e35d50119	9372bb8754a74a9e

The first 32 PAM4 symbols contained in the upper left cell of Table K.17 sent to the PAM4 Transmitter (left to right) are the following:

{0,3,3,2,2,1,1,0,0,1,1,0,2,0,2,2,2,0,1,2,0,0,2,3,2,1,0,2,1,2,0,3}

K.6 64GFC - Alignment Marker and Idle Pattern with Precoding Disabled

K.6.1 Overview

This annex provides a transmitted bit stream produced by 64B/66B to 256B/257B transcoding (see 5.5.2), alignment marker mapping and insertion (see 5.5.3), Reed-Solomon encoding (see 5.5.4), and Gray mapping (see 5.5.5) computations. Results of each computation are provided in a tabular form. The contents of the tables are transmitted from left to right within each row starting from the top row and ending at the bottom row. The tables contain both binary and hexadecimal representations of the data. For the hexadecimal representation, the most significant bit of each hex symbol is transmitted first.

Refer to Annex K.4 for results of 64B/66B to 256B/257B transcoding (see Table K.13).

K.6.2 Output of alignment marker mapping and insertion

Table K.18 contains the result of alignment marker insertion into the 64B/66B to 256B/257B transcoded bit stream (see Table K.13). The *italicized* values appearing in the first row of the table denote the 257 bits (including the pad value of 0 in bit position <256>) of the 64GFC alignment marker described in 5.5.3. In this example, the Remote Degrade (RD) field is set to 0.

Table K.18 - 64GFC alignment marker insertion output

Header <0:4>	Payload, hex <5:64>	Payload, hex <65:128>	Payload, hex <129:192>	Payload, hex <193:256>
10000	*62d080af9d2f7f5*	*5fc120aaa03edf54*	*0a48dcabf5b72354*	*753a9aab8ac56554*
00101	a5a3bf86d9acf5c	de55cb85df0f7ca0	e6ccff8e8212b1c6	d63bc6c309000638
11110	7e3b0ce30e0497d	dc8df31ec3ab4491	66fb9139c81cd37b	b57477d4f05e3602
01111	8fd495012947a31	e7777cf0c6d06280	44529cf4b4900528	85ce1d27750ad61b
00110	46d5c71743f5c69	c1bf62e5dc5464b5	dc6011be7ea1ed54	1cf92c450042a75f
00100	c4b940eaf3140db	77bb612a7abf401f	c22d341e90545d98	ce6daf1f248bbd6d
10010	d22d0b3f9551ed6	574686c3f9e93898	2e52628f4a1282ce	f20c86d71944aab1
10001	5133c9333808a2c	1aa825d8b817db4d	637959989f3021eb	976806641b26aae9
00011	637d4531b7ed5f2	53c3e96d3b12fb46	528c7eb8481bc969	ab8f9980d5a54559
10100	94d2abfda65cc33	94fe646efe5af02d	9a65ae5fcd88c03a	5ef08673168def9b
00000	20c871a953fffc6	ce0bb95ac263e6c1	4f6a917d1a676571	5890918c7b687d75
01101	4d2b3e43096f836	84cdd4fc48b79608	b3e4503e3c824a8c	fd6d0b1a39687929
10011	130167c08302a69	4c15ff56de92b1ad	d0c2f0d4ff0dee95	e1422ee2e8b92125
00101	e5acaf86592fcee	de799be0b903c880	2714ffbf40bc09f6	c3be97c3c285009f
10010	120faf19f606631	93007cabbb3f8c9d	ef6955f7f43df5d0	4dbd0616afe60e1f
10001	31e49b7c7f7bb5d	901d828746ceec61	71ed3c097158c224	11adb3d81e13d263
00101	a50d1a343b2394b	eab30ca27b5b34e3	90359ef711ed53d9	9b446763c8627ea8
01000	6891c0f4842b823	c4d786a25727a7fc	094fe7da31fb60cd	9f9a004de5e70767
00100	04bdd77b7cb4e7b	c598cb710558af67	fc386d1f99d3a925	4928e0b43e781893
10100	544dd3eb8b2ad6c	94462af4f583d770	8061ba9381f51f55	476d4eded7c90fcc
11111	1fc25aa6a7e0b4c	93dd968c06a56809	9768e9d1ba74d3b6	014e9dc9f13670bb

K.6.3 Output of the RS(544,514) encoder

Table K.19 contains an RS(544,514) codeword. In this example, due to periodic alignment marker insertion into the bit stream which facilitates receiver alignment locking (see 5.5.9), the alignment marker (denoted by *italicized* values) from Table K.18 appears as the first 257-bit block in the message portion of the codeword, and the remaining nineteen 257-bit blocks of the message portion of the codeword are composed of rows 2 through 20 of Table K.18.

Table K.19 - RS(544,514) codeword output

Header <0:4>	Payload, hex <5:64>	Payload, hex <65:128>	Payload, hex <129:192>	Payload, hex <193:256>
10000	*62d080af9d2f7f5*	*5fc120aaa03edf54*	*0a48dcabf5b72354*	*753a9aab8ac56554*
00101	a5a3bf86d9acf5c	de55cb85df0f7ca0	e6ccff8e8212b1c6	d63bc6c309000638
11110	7e3b0ce30e0497d	dc8df31ec3ab4491	66fb9139c81cd37b	b57477d4f05e3602
01111	8fd495012947a31	e7777cf0c6d06280	44529cf4b4900528	85ce1d27750ad61b
00110	46d5c71743f5c69	c1bf62e5dc5464b5	dc6011be7ea1ed54	1cf92c450042a75f
00100	c4b940eaf3140db	77bb612a7abf401f	c22d341e90545d98	ce6daf1f248bbd6d
10010	d22d0b3f9551ed6	574686c3f9e93898	2e52628f4a1282ce	f20c86d71944aab1
10001	5133c9333808a2c	1aa825d8b817db4d	637959989f3021eb	976806641b26aae9
00011	637d4531b7ed5f2	53c3e96d3b12fb46	528c7eb8481bc969	ab8f9980d5a54559
10100	94d2abfda65cc33	94fe646efe5af02d	9a65ae5fcd88c03a	5ef08673168def9b
00000	20c871a953fffc6	ce0bb95ac263e6c1	4f6a917d1a676571	5890918c7b687d75
01101	4d2b3e43096f836	84cdd4fc48b79608	b3e4503e3c824a8c	fd6d0b1a39687929
10011	130167c08302a69	4c15ff56de92b1ad	d0c2f0d4ff0dee95	e1422ee2e8b92125
00101	e5acaf86592fcee	de799be0b903c880	2714ffbf40bc09f6	c3be97c3c285009f
10010	120faf19f606631	93007cabbb3f8c9d	ef6955f7f43df5d0	4dbd0616afe60e1f
10001	31e49b7c7f7bb5d	901d828746ceec61	71ed3c097158c224	11adb3d81e13d263
00101	a50d1a343b2394b	eab30ca27b5b34e3	90359ef711ed53d9	9b446763c8627ea8
01000	6891c0f4842b823	c4d786a25727a7fc	094fe7da31fb60cd	9f9a004de5e70767
00100	04bdd77b7cb4e7b	c598cb710558af67	fc386d1f99d3a925	4928e0b43e781893
10100	544dd3eb8b2ad6c	94462af4f583d770	8061ba9381f51f55	476d4eded7c90fcc
Parity, hex <0:63>	**Parity, hex <64:127>**	**Parity, hex <128:191>**	**Parity, hex <192:255>**	**Parity, hex <256:299>**
0398b9e94541f868	bd637481bbb600b3	1cdf5cb66ed407df	17e5414bfa112458	7b9c3be3598

Table K.20 is the hexadecimal reformatting of the values appearing in Table K.19. Note that the *italicized* values denote the alignment marker excluding the pad value of 0 in bit position <256>.

Table K.20 - RS(544,514) codeword output in hexadecimal format

Payload. hex <0:63>	Payload, hex <64:127>	Payload, hex <128:191>	Payload, hex <129:255>	Payload, hex <256:319>
831684057ce97bfa	*afe09055501f6faa*	*05246e55fadb91aa*	*3a9d4d55c562b2aa*	16968efe1b66b3d7
379572e177c3df28	39b33fe3a084ac71	b58ef1b0c240018e	3cfc7619c61c092f	bb91be63d8756892
2cdf722739039a6f	76ae8efa9e0bc6c0	4f8fd495012947a3	1e7777cf0c6d0628	044529cf4b490052
885ce1d27750ad61	b3236ae38ba1fae3	4e0dfb172ee2a325	aee3008df3f50f6a	a0e7c9622802153a
f9312e503abcc503	6ddeed84a9eafd00	7f08b4d07a415176	6339b6bc7c922ef5	b65a45a167f2aa3d
acae8d0d87f3d271	305ca4c51e942505	9de4190dae328955	6315133c9333808a	2c1aa825d8b817db
4d637959989f3021	eb976806641b26aa	e91b1bea298dbf6a	f929e1f4b69d897d	a329463f5c240de4
b4d5c7ccc06ad2a2	acd2534aaff69973	0ce53f991bbf96bc	0b66996b97f36230	0e97bc219cc5a37b
e6c04190e352a7ff	f8d9c1772b584c7c	d829ed522fa34cec	ae2b1212318f6d0f	aead4d2b3e43096f
83684cdd4fc48b79	608b3e4503e3c824	a8cfd6d0b1a39687	92998980b3e04181	534a60affab6f495
8d6e861786a7f86f	74af0a11771745c9	0929796b2be1964b	f3bb79e66f82e40f	22009c53fefd02f0
27db0efa5f0f0a14	027e4241f5e33ec0	cc632600f957767f	193bded2abefe87b	eba09b7a0c2d5fcc
1c3f131e49b7c7f7	bb5d901d828746ce	ec6171ed3c097158	c22411adb3d81e13	d2632d2868d1a1d9
1ca5f55986513dad	9a71c81acf7b88f6	a9eccda233b1e431	3f5421a24703d210	ae08f135e1a895c9
e9ff0253f9f68c7e	d83367e680137979	c1d9c8097baef6f9	69cf78b3196e20ab	15ecff870da3f33a
7524a9251c1687cf	031274544dd3eb8b	2ad6c94462af4f58	3d7708061ba9381f	51f55476d4eded7c
90fcc0398b9e9454	1f868bd637481bbb	600b31cdf5cb66ed	407df17e5414bfa1	124587b9c3be3598

K.6.4 Output of the Gray mapper

Table K.21 contains the result of Gray mapping (see 5.5.5) values received from Table K.20. When precoding is disabled, the resulting set of 2720 PAM4 symbols illustrated in Table K.21 is input to the PAM4 Transmitter for output on the physical medium. *Italicized* values denote the alignment marker excluding the pad value of 0 in bit position <256>.

Table K.21 - Gray mapper output

Payload. hex <0:63>	Payload, hex <64:127>	Payload, hex <128:191>	Payload, hex <129:255>	Payload, hex <256:319>
c217c40568bd6eaf	*fab0d055501a7aff*	*05347b55af9ed1ff*	*2fd949558573e3ff*	17d7cbab1e77e296
26d563b166829a3c	2de22ab2f0c4f861	e5cba1e0834001cb	28a8671d87180d3a	eed1eb729c657cd3
389a63362d02df7a	67fbcbafdb0e8780	4aca94d5013d46f2	1b66668a0879073c	04453d8a4e4d0053
cc58b1936650f971	e2327fb2cef1afb2	4b09ae163bb3f235	fbb200c9a2a50a7f	f0b68d733c03152f
ad213b502fe88502	799bb9c4fdbfa900	6a0ce4906f415167	722de7e868d33ba5	e75f45f176a3ff29
f8fbc909c6a29361	2058f4851bd43505	d9b41d09fb23cd55	72151228d222c0cf	381ffc359cec169e
49726d5ddcda2031	bed67c07741e37ff	bd1e1ebf3dc9ea7f	ad3db1a4e7d9cd69	f23d472a583409b4
e4958688807f93f3	f893524ffaa7dd62	08b52add1eead7e8	0e77dd7ed6a27320	0bd6e831d885f26e
b78041d0b253f6aa	ac9d81663e5c4868	9c3db9533af248b8	fb3e131321ca790a	fbf9493e2b420d7a
c27c48994a84ce6d	70ce2b4502b28c34	fc8a9790e1f2d7c6	d3ddcdc0e2b041c1	524f70faafe7a4d5
c97bc716c7f6ac7a	64fa0f116616458d	0d3d6d7e3eb1d74e	a2ee6db77ac3b40a	3300d852aba903a0
369e0baf5a0a0f14	036b4341a5b22b80	88723700ad56676a	1d2e9b93febabc6e	bef0de6f08395a88
182a121b4de686a6	ee59d019c3c6478b	b87161b9280d615c	833411f9e29c1b12	9372393c7c91f19d
18f5a55dc75129f9	df618c1f8a6ecca7	fdb889f322e1b421	2a5431f346029310	fb0ca125b1fcd58d
bdaa0352ada7c86b	9c2276b7c0126d6d	819d8c0d6efba7ad	7d8a6ce21d7b30fe	15b8aac609f2a22f
6534fd351817c68a	021364544992bece	3f978d4473fa4a5c	29660c071efd2c1a	51a5546794b9b968
d0a8802dcedbd454	1ac7ce97264c1eee	700e2189a58e77b9	4069a16b5414eaf1	1345c6ed82eb25dc

The first 32 PAM4 symbols contained in the upper left cell of Table K.21 sent to the PAM4 Transmitter (left to right) are the following:

{3,0,0,2,0,1,1,3,3,0,1,0,0,0,1,1,1,2,2,0,2,3,3,1,1,2,3,2,2,2,3,3}

K.7 256GFC - Idle Pattern and Precoding Disabled

K.7.1 Overview

This annex provides a transmitted bit stream produced by 64B/66B to 256B/257B transcoding (see 5.9.2.1), Reed-Solomon encoding (see 5.9.2.3), 10-bit symbol distribution (see 5.9.2.4) and Gray mapping (see 5.9.2.5) computations. Results of each computation are provided in a tabular form. The contents of the tables are transmitted from left to right within each row starting from the top row and ending at the bottom row. The tables contain both binary and hexadecimal representations of the data. For the hexadecimal representation, the most significant bit of each hex symbol is transmitted first.

Refer to Annex K.4 for results of 64B/66B to 256B/257B transcoding (see Table K.13) and Reed-Solomon encoding (see Table K.14).

K.7.2 Output of symbol distribution

Table K.14 contains contains an RS(544,514) codeword. The 5440 bits which comprise the RS(544,514) codeword are distributed 10 bits at a time in round-robin fashion across 4 lanes (see 5.9.2.4). The result of symbol distribution is illustrated in Table K.22.

Table K.22 - 10-bit symbol distribution

Lane 0 Payload. hex <0:79>	Lane 1 Payload, hex <0:79>	Lane 2 Payload. hex <0:79>	Lane 3 Payload, hex <0:79>
2d335e5d4141077030ce	b467a0bb362563671cc3	dff9bf859f8e0619fa04	0db2aefbc7dac803b25f
773abe477b3c07e8f678	8dd1239ed55e29218d8d	cc51620747d8280cee83	ec1becd1f527e52bbc50
08a48c3b0d1746f4646f	2940a93a640ff622d67e	39d44ea1b55c797dc687	a58b9569c7a71c5806d5
41c105c81b53c45a2de3	3e6a781dbb57e9ab3392	2c57c57b76a003d67117	1426262b093f882db5eb
6cb951a3893d320129e4	d21476c20ba1321ab266	b42d6fe652a0ad7629c0	b3d5de918acec6589914
581c0f290fc80d87efa5	d56fbccd72d937d57ed3	049a613fb4d5514252c4	ec6c69800c74b1bf0efb
465208f9155ff292d75c	4a1bc6619ab4ff3e06fe	c7e5a0d5292e48d6cdb1	ae1ab696958677f4c860
1d22d833ff5694f99c91	bdc6f8731bc25aa65631	841f36a4e08f917c57b6	ce58053eee6c3468921f
5d61899bcb07e7e2d005	6a52dea4111e6da3ca7c	a57c1f899f0485853020	9f2d04588a54747c4f02
a69b70c37bee14b2cb33	53292bc295ba32d5f9f0	15ec6d4f85b919577572	fd6ddfc02284bc3bcc1e
443e81dca0ebf19ece95	04c5ed2c4f19cc0f8d7d	8a413e1f21d807c277f4	ff7b685083662aeef4f7
d756a263bd0530be296d	04ff9f276b3a23dc627b	6f60e36ec8d9e9e4480f	0607ee3c3b7601208c27
a4e8dea96c9ef66c8512	1943bcc34edc5b489ce0	a508eca0e41ed19ea9e9	3454b9ec3554f6310c21
5c14404bf6002ceedd98	47ab99ff069bd01cb72d	268f43edb32f0bd39f10	f0ffe463cde0f5dbc556
2bd1f526789bab69e830	67e6728c629f528c1f75	f0d3a82d3a71631aec9c	86e4943ca89555e8403e
a3f6f9f29fd96021b853	aa9af7f20ba31979d29d	8ee4825932069a3d3b27	6a5f9a993d95a9dd8313
6720ecc376d75cf415d0	2ededf2fa65b9246abdc	d6b0f4572fa6e7860a07	60e5aa4426d6f0fc5421

K.7.3 Output of the Gray mapper

Table K.23 contains the result of Gray mapping (see 5.9.2.5) values received from Table K.22. When precoding is disabled, the resulting four sets of 680 PAM4 symbols illustrated in Table K.23 are input to four PAM4 Transmitters for output on the physical media.

Table K.23 - Gray mapper output

Lane 0 Payload. hex <0:79>	Lane 1 Payload, hex <0:79>	Lane 2 Payload. hex <0:79>	Lane 3 Payload, hex <0:79>
39225b5941410660208b	e476f0ee273572761882	9aadeac5dacb071daf04	09e3fbae869f8c02e35a
662feb466e2806bca76c	c99132db955b3d31c9c9	88517306469c3c08bbc2	b81eb891a536b53ee850
0cf4c82e091647a4747a	3d40fd2f740aa733976b	2d944bf1e5586d6987c6	f5ced57d86f6185c0795
4181058c1e52845f39b2	2b7f6c19ee56bdfe22d3	3856856e67f002976116	1437373e0d2acc39e5be
78ed51f2cd2923013db4	931467830ef1231fe377	e4397ab753f0f9673d80	e2959bd1cf8b875cdd14
5c180a3d0a8c09c6baf5	957ae889639d26956b92	04df712ae49551435384	b8787dc00864e1ea0bae
47530cad155aa3d39658	4f1e8771dfe4aa2b07ab	86b5f0953d3b4c9789e1	fb1fe7d7d5c766a48c70
19339c22aa57d4add8d1	e987ac621e835ff75721	c41a27f4b0cad16856e7	8b5c052bbb78247cd31a
5971cdde8e06b6b39005	7f539bf4111b79f28f68	f5681acdda04c5c52030	da39045ccf5464684a03
f7de60826ebb14e38e22	523d3e83d5ef2395ada0	15b8794ac5ed1d566563	a9799a8033c4e82e881b
442bc198f0bea1db8bd5	0485b9384a1d880ac969	cf412b1a319c068366a4	aa6e7c50c2773fbba4a6
9657f372e90520eb3d79	04aada367e2f3298736e	7a70b27b8c9dbdb44c0a	0706bb282e670130c836
f4bc9bfd78dba778c513	1d42e8824b985e4cd8b0	f50cb8f0b41b91dbfdbd	2454edb82554a7210831
5814404ea70038bb99dc	46feddaa07de9018e639	37ca42b9e23a0e92da10	a0aab47289b0a59e8557
3e91a5376cdefe7dbc20	76b763c873da53c81a65	a092fc392f61721fb8d8	c7b4d428fcd555bc402b
f2a7ada3da9d7031ec52	ffdfa6a30ef21d6d93d9	cbb4c35d2307df292e36	7f5adfdd29d5fd99c212
7630b882679658a41590	3b9b9a3af75ed347fe98	97e0a4563af7b6c70f06	70b5ff443797a0a85431

The first 32 PAM4 symbols contained in the upper left cell of Table K.23 and sent to the PAM4 Transmitter on Lane 0 (left to right) are the following:

{0,3,2,1,0,2,0,2,1,1,2,3,1,1,2,1,1,0,0,1,1,0,0,1,0,0,1,2,1,2,0,0}

K.8 256GFC - Idle Pattern and Precoding Enabled

K.8.1 Overview

This annex provides a transmitted bit stream produced by 64B/66B to 256B/257B transcoding (see 5.9.2.1), Reed-Solomon encoding (see 5.9.2.3), 10-bit symbol distribution (see 5.9.2.4), Gray mapping (see 5.9.2.5) and precoding (see 5.9.2.6) computations. Computation results are provided in a tabular form. The contents of the tables are transmitted from left to right within each row starting from the top row and ending at the bottom row. The tables contain both binary and hexadecimal representations of the data. For the hexadecimal representation, the most significant bit of each hex symbol is transmitted first.

Refer to Annex K.4 for results of 64B/66B to 256B/257B transcoding (see Table K.13) and Reed-Solomon encoding (see Table K.14), and Annex K.7 for results of 10-bit symbol distribution (see Table K.22) and Gray mapping (see Table K.23).

K.8.2 Output of the precoder

When precoding is enabled, the resulting four sets of 680 PAM4 symbols output by the Gray mapper (refer to Table K.23) are input to 4 independent precoders. For i = 0 to 3 and j = 1 to 680, each precoder transforms each PAM4 symbol received from a given column of Table K.23 (representing that part of the payload transmitted on a given lane) G(i,j) into a PAM4 symbol P(i,j) according to the following algorithm:

P(i,j) = (G(i,j) - P(i,j-1)) mod 4

The initial output value of each precoder P(i,0) was set to 0. Table K.24 contains the result of precoding (see 5.5.6). The resulting four sets of 680 PAM4 symbols are input to the 4 PAM4 Transmitters for output on the physical media.

Table K.24 - Precoder output

Lane 0 Payload. hex <0:79>	Lane 1 Payload, hex <0:79>	Lane 2 Payload. hex <0:79>	Lane 3 Payload, hex <0:79>
3e82e3bededeaf802a09	fac59d8f536ec2c5e0a8	bff188d1bf09d34e26ad	0b29962578b3daa8f6e2
2f59890525fdd23086f0	d4b435bcbbbc31c1a1a1	7d1ec37878b0300a3cdf	3de560b4843891cf2040
0d90d7580b45062d3ac8	cedd9b593aa22c361389	5bed099e51178efe0678	c4d8eece0592bd1aacbb
74ab7bdab2e8ad19cbc2	fc66f014f2efce65f5b6	3d12045853377546f412	476c39cf71ff0dcb2e32
ca5bb4c271fe8374316d	1c1053dc0f3429e65c6c	503ec893b66a612c3177	5fee1641a609791a4eba
1abdd5cea20dd4d23f3b	bb958a0b83e42feefcb5	7a4c6b5587eeeba91cad	3d3d31aaa050f4ff7c8f
ac43708ebbbff643efbd	0c18ac6b1987ff56ac89	78919d4431c90d460b2b	3c19864644d38550a79d
e1c3e75fffb9ba24e0eb	8bd3f05f4fdc4cc6ec2b	07482cc7c0d5b457b8f9	7c4dd1fc96ca879a4348
bec1a4e572afc5694004	991cbcc741e394c20c57	912015a4e2adae7b5dc0	e29407b0d9105057a2a9
c64f80a85896ba5ca5f5	b5ce98a9bb2683ee2480	11606108d18eb112fb83	546148aa9cd0fdf20abc
075674bd9d655e497cee	07d161cad5e4a008d454	0c74234834b00576f887	885867b702c69963fa2f
12ecc39f21d1f7236461	07ff15c5328c354ac38f	9537c2c970b164907008	79d23c20252c01c0d76f
909a166460e3f93daeb6	4edf20a87cbd1870e09d	c40d60c090161e499bce	5047249751108681d76b
e01077a55377609614e7	0598e488064feabd85cb	930875618295d8b5bf40	f7ffc79fd49d514fd113
654151c6f0e598649a80	923929a069bfb67de2fb	80b59a9426f4681960e0	063a475730eeee307756
c22c8e29bfe46a9e5ae8	33195229d8c2b124b64b	d63a76e429d319fe8f6f	cc48e64e8b119be1a81f
6f6a3d752cb84a2dee1d	63e3e29593b243accfe0	ecf7faef626c9279d9d2	9d6e66d039462a20476b

The first 32 PAM4 symbols contained in the upper left cell of Table K.24 and sent to the PAM4 Transmitter on Lane 0 (left to right) are the following:

{0,3,3,2,2,0,0,2,3,2,0,3,2,3,3,2,3,1,3,2,3,1,3,2,2,2,3,3,2,0,0,0}

K.9 256GFC - Alignment Marker and Idle Pattern with Precoding Disabled

K.9.1 Overview

This annex provides a transmitted bit stream produced by 64B/66B to 256B/257B transcoding (see 5.9.2.1), alignment marker mapping and insertion (see 5.9.2.2), Reed-Solomon encoding (see 5.9.2.3), 10-bit symbol distribution (see 5.9.2.4) and Gray mapping (see 5.9.2.5) computations. Computation results are provided in a tabular form. The contents of the tables are transmitted from left to right within each row starting from the top row and ending at the bottom row. The tables contain both binary and hexadecimal representations of the data. For the hexadecimal representation, the most significant bit of each hex symbol is transmitted first.

Refer to Annex K.4 for results of 64B/66B to 256B/257B transcoding (see Table K.13).

K.9.2 Output of alignment marker mapping and insertion

Table K.25 contains the result of alignment marker insertion into the 64B/66B to 256B/257B transcoded bit stream (see Table K.13). The *italicized* values appearing in the first and second rows of the table denote the 514 bits (including three instances of 10b pad values in the second row bit positions <231:232>, <241:242> and <251:252>) of the 256GFC alignment marker described in 5.9.2.2. In this example, the Remote Degrade (RD) field is set to 0.

Table K.25 - 256GFC alignment marker insertion output

Header <0:4>	Payload, hex <5:64>	Payload, hex <65:128>	Payload, hex <129:192>	Payload, hex <193:256>
10000	*641906418b42d0b*	*42d080a288a228be*	*6f9be6f9d2f4bd2f*	*4bdff75dd77555e5*
11011	*16cdfe0ca152a8a*	*4243d9366b95ad36*	*a148074d5ab15f6f*	*ef19b6651a148267*
00101	a5a3bf86d9acf5c	de55cb85df0f7ca0	e6ccff8e8212b1c6	d63bc6c309000638
11110	7e3b0ce30e0497d	dc8df31ec3ab4491	66fb9139c81cd37b	b57477d4f05e3602
01111	8fd495012947a31	e7777cf0c6d06280	44529cf4b4900528	85ce1d27750ad61b
00110	46d5c71743f5c69	c1bf62e5dc5464b5	dc6011be7ea1ed54	1cf92c450042a75f
00100	c4b940eaf3140db	77bb612a7abf401f	c22d341e90545d98	ce6daf1f248bbd6d
10010	d22d0b3f9551ed6	574686c3f9e93898	2e52628f4a1282ce	f20c86d71944aab1
10001	5133c9333808a2c	1aa825d8b817db4d	637959989f3021eb	976806641b26aae9
00011	637d4531b7ed5f2	53c3e96d3b12fb46	528c7eb8481bc969	ab8f9980d5a54559
10100	94d2abfda65cc33	94fe646efe5af02d	9a65ae5fcd88c03a	5ef08673168def9b
00000	20c871a953fffc6	ce0bb95ac263e6c1	4f6a917d1a676571	5890918c7b687d75

Header <0:4>	Payload, hex <5:64>	Payload, hex <65:128>	Payload, hex <129:192>	Payload, hex <193:256>
01101	4d2b3e43096f836	84cdd4fc48b79608	b3e4503e3c824a8c	fd6d0b1a39687929
10011	130167c08302a69	4c15ff56de92b1ad	d0c2f0d4ff0dee95	e1422ee2e8b92125
00101	e5acaf86592fcee	de799be0b903c880	2714ffbf40bc09f6	c3be97c3c285009f
10010	120faf19f606631	93007cabbb3f8c9d	ef6955f7f43df5d0	4dbd0616afe60e1f
10001	31e49b7c7f7bb5d	901d828746ceec61	71ed3c097158c224	11adb3d81e13d263
00101	a50d1a343b2394b	eab30ca27b5b34e3	90359ef711ed53d9	9b446763c8627ea8
01000	6891c0f4842b823	c4d786a25727a7fc	094fe7da31fb60cd	9f9a004de5e70767
00100	04bdd77b7cb4e7b	c598cb710558af67	fc386d1f99d3a925	4928e0b43e781893
10100	544dd3eb8b2ad6c	94462af4f583d770	8061ba9381f51f55	476d4eded7c90fcc
11111	1fc25aa6a7e0b4c	93dd968c06a56809	9768e9d1ba74d3b6	014e9dc9f13670bb

K.9.3 Output of the RS(544,514) encoder

Table K.26 contains an RS(544,514) codeword. In this example, due to periodic alignment marker insertion into the bit stream which facilitates receiver alignment locking, lane deskewing (see 5.9.2.10) and lane reordering (see 5.9.2.11), the alignment marker (denoted by *italicized* values) from Table K.25 appears as the first two 257-bit blocks in the message portion of the codeword, and the remaining eighteen 257-bit blocks of the message portion of the codeword are composed of rows 3 through 20 of Table K.25.

Table K.26 - RS(544,514) codeword output

Header <0:4>	Payload, hex <5:64>	Payload, hex <65:128>	Payload, hex <129:192>	Payload, hex <193:256>
10000	*641906418b42d0b*	*42d080a288a228be*	*6f9be6f9d2f4bd2f*	*4bdff75dd77555e5*
11011	*16cdfe0ca152a8a*	*4243d9366b95ad36*	*a148074d5ab15f6f*	*ef19b6651a148267*
00101	a5a3bf86d9acf5c	de55cb85df0f7ca0	e6ccff8e8212b1c6	d63bc6c309000638
11110	7e3b0ce30e0497d	dc8df31ec3ab4491	66fb9139c81cd37b	b57477d4f05e3602
01111	8fd495012947a31	e7777cf0c6d06280	44529cf4b4900528	85ce1d27750ad61b
00110	46d5c71743f5c69	c1bf62e5dc5464b5	dc6011be7ea1ed54	1cf92c450042a75f
00100	c4b940eaf3140db	77bb612a7abf401f	c22d341e90545d98	ce6daf1f248bbd6d
10010	d22d0b3f9551ed6	574686c3f9e93898	2e52628f4a1282ce	f20c86d71944aab1
10001	5133c9333808a2c	1aa825d8b817db4d	637959989f3021eb	976806641b26aae9
00011	637d4531b7ed5f2	53c3e96d3b12fb46	528c7eb8481bc969	ab8f9980d5a54559
10100	94d2abfda65cc33	94fe646efe5af02d	9a65ae5fcd88c03a	5ef08673168def9b
00000	20c871a953fffc6	ce0bb95ac263e6c1	4f6a917d1a676571	5890918c7b687d75

Header <0:4>	Payload, hex <5:64>	Payload, hex <65:128>	Payload, hex <129:192>	Payload, hex <193:256>
01101	4d2b3e43096f836	84cdd4fc48b79608	b3e4503e3c824a8c	fd6d0b1a39687929
10011	130167c08302a69	4c15ff56de92b1ad	d0c2f0d4ff0dee95	e1422ee2e8b92125
00101	e5acaf86592fcee	de799be0b903c880	2714ffbf40bc09f6	c3be97c3c285009f
10010	120faf19f606631	93007cabbb3f8c9d	ef6955f7f43df5d0	4dbd0616afe60e1f
10001	31e49b7c7f7bb5d	901d828746ceec61	71ed3c097158c224	11adb3d81e13d263
00101	a50d1a343b2394b	eab30ca27b5b34e3	90359ef711ed53d9	9b446763c8627ea8
01000	6891c0f4842b823	c4d786a25727a7fc	094fe7da31fb60cd	9f9a004de5e70767
00100	04bdd77b7cb4e7b	c598cb710558af67	fc386d1f99d3a925	4928e0b43e781893
Parity, hex <0:63>	**Parity, hex <64:127>**	**Parity, hex <128:191>**	**Parity, hex <192:255>**	**Parity, hex <256:299>**
9e81f901d1a1a2c7	106f6531eaf7d346	f2febd753bf525d6	183d63c336542cdd	d3260e94821

K.9.4 Output of symbol distribution

The 5440 bits which comprise the RS(544,514) codeword in Table K.26 are distributed 10 bits at a time in round-robin fashion across 4 lanes (see 5.9.2.4). The result of symbol distribution is illustrated in Table K.27. Note that the *italicized* values appearing in the first and second rows of the table denote the 508 bits (excluding three instances of the 2-bit pad value [10b] in the second row bit positions <48:49> of Lane 0, 1 and 2) of the 256GFC alignment marker described in 5.9.2.2.

Table K.27 - 10-bit symbol distribution

Lane 0 Payload. hex <0:79>	Lane 1 Payload, hex <0:79>	Lane 2 Payload. hex <0:79>	Lane 3 Payload, hex <0:79>
831684057ce97bfaafe0	*831684537ce97bacbb28*	*831684537ce97bac5952*	*831684537ce97bacdea2*
*90b9501f6f4692*d59dc2	*43eb44d7bc14877*ae7be	*64f6a6ad9b09*bc3bc87b	*6685215d9972*db3ae794
1cd0978f1ce3323b444e	66563619e7381f3245c8	ff2361238e4947b66c73	742c70030cf743aee537
bb417ea7468608a803a4	5d2362a0f3da14ea53ba	77c09096ee315e942e15	53fc728fe7009a49c2b0
d9b43fda4bf9dcf0a8a0	46fd72e577ea24b75dd5	57069770607b445c9b98	71706544465400125e81
b6fd55a6ec3e4b45521b	bdfe8a0f192462d7b43f	6c00fd23367782c6567a	953842a35eb6ff9d1938
981280caaa498350beb3	b95281b71867141b68c4	260b371aa2044bb6b3e6	a3ef25119e4585c6f010

Lane 0 Payload. hex <0:79>	Lane 1 Payload, hex <0:79>	Lane 2 Payload. hex <0:79>	Lane 3 Payload, hex <0:79>
f5c368ded55b65206f99	2ed35d47c93b231c9603	4015d4c53c4bfeba695a	cc88db7cfab4612b8d51
567ed9fd78cbd2fd1b21	a48cb3205be6de1f7f1a	9a661ddcd31183336254	55e72f2cb501e62083ff
fc6b0f69d918d5a849ba	b3a63a45711ee69df27e	0bb9b7d162685671b491	e541469909f5f21099bc
b07c7eb50f59e947a42f	16641a1494c0b052b035	f20958d3310c1ff6b4ff	a046772cc02a55bd0c37
ba62ebc89737c01815f4	5e22ed679d05ce2e06f8	509215f36f2067f3ede1	2ec9432cf3e477e61d0a
013c6930fe55f41afe3c	fc9f601cc9dfcdb9824d	12019cab7b43f41e1ef8	3ea31eef697d616e27fb
dd90eb8eb1d9cc6d0eb3	bb236da611b0169b2032	80ddde0482f090de5227	b06302e0d67a468bead6
cd2f766c62238114aca7	e3847445fa07b8993fcf	40ed59da8490abc4fed1	59cf63c8d115cd4e063f
6c026e41f28cbd9f9a4a	66fcb12f4edc7fc74ce0	3f338dd5ef054e1a92d0	d00ecdec5962ad1953e7
81a40712bdebd75334c9	24dd11bfd35d6189520e	9ea866511b3bcf52ce52	07e2cc7b2fd4a3c77421

K.9.5 Output of the Gray mapper

Table K.28 contains the result of Gray mapping (see 5.9.2.5) values received from Table K.27. When precoding is disabled, the resulting four sets of 680 PAM4 symbols illustrated in Table K.28 are input to four PAM4 Transmitters for output on the physical media.

Table K.28 - Gray mapper output

Lane 0 Payload. hex <0:79>	Lane 1 Payload, hex <0:79>	Lane 2 Payload. hex <0:79>	Lane 3 Payload, hex <0:79>
c217c40568bd6eaffab0	*c217c45268bd6ef8ee3c*	*c217c45268bd6ef85d53*	*c217c45268bd6ef89bf3*
*d0ed501a7a47*d395d983	*42be4496e814*c66fb6eb	*74a7f7f9de0d*e82e8c6e	*77c53159dd6*39e2fb6d4
1890d6ca18b2232e444b	7757271db62c1a23458c	aa327132cb4d46e77862	6438600208a642fbb526
ee416bf647c70cfc02f4	593273f0a29f14bf52ef	6680d0d7bb215bd43b15	52a863cab600df4d83e0
9de42a9f4ead98a0fcf0	47a963b566bf34e65995	5607d660706e4458dedc	61607544475400135bc1
e7a955f7b82b4e45531e	e9abcf0a1d347396e42a	7800a9322766c387576f	d52c43f25be7aad91d2c
dc13c08fff4dc250ebe2	ed53c1e61c76141e7c84	370e261ff3044ee7e2b7	f2ba3511db45c587a010
a5827c9b955e75307add	3b9259468d2e3218d702	40159485284eabef7d5f	88cc9e68afe4713ec951
576b9da96c8e93a91e31	f4c8e2305eb79b1a6a1f	df7719989211c2227354	55b63a38e501b730c2aa
a87e0a7d9d1c95fc4def	e2f72f45611bb7d9a36b	0eede691737c5761e4d1	b54147dd0da5a310dde8
e0686be50a5dbd46f43a	17741f14d480e053e025	a30d5c9221081aa7e4aa	f0476638803f55e90826
ef73be8cd626801c15a4	5b33b976d9058b3b07ac	50d315a27a3076a2b9b1	3b8d4238a2b466b7190f
01287d20ab55a41fab28	a8da70188d9a89edc349	1301d8fe6e42a41b1bac	2bf21bba7d69717b36ae
99d0becbe19d88790be2	ee3279f711e017de3023	c0999b04c3a0d09b5336	e07203b0976f47cebf97
893a67787332c114f8f6	b2c46445af06ecdd2a8a	40b95d9fc4d0fe84ab91	5d8a728c9115894b072a
78037b41a3c8e9dadf4f	77a8e13a4b986a8648b0	2a22c995ba054b1fd390	900b89b85d73f91d52b6
c1f40613e9be9652248d	349911ea925971cd530b	dbfc77511e2e8a538b53	06b3886e3a94f2866431

The first 32 PAM4 symbols contained in the upper left cell of Table K.28 and sent to the PAM4 Transmitter on Lane 0 (left to right) are the following:

{3,0,0,2,0,1,1,3,3,0,1,0,0,0,1,1,1,2,2,0,2,3,3,1,1,2,3,2,2,2,3,3}

K.10 Single lane 128GFC using Interleaved Reed-Solomon (RS(544,514)) and Symbol Forwarding – Alignment Marker and Idle Pattern

K.10.1 Overview

This annex provides an example transmitted bit stream produced by 64B66B to 256B/257B transcoding (see 5.5.2), alignment marker mapping and insertion (see 5.5.3), 10-bit symbol round-robin distribution (see 5.10.3), Reed-Solomon encoding (see 5.5.4), and symbol forwarding (see 5.10.5). Results of each computation are provided in a tabular form. The contents of the tables are transmitted from left to right within each row starting from the top row and ending at the bottom row. The tables contain both binary and hexadecimal representations of the data. For the hexadecimal representation, the most significant bit of each hex symbol is transmitted first.

K.10.2 Input to the 64B/66B scrambler

Table K.29 contains the sequence of 160 66-bit blocks corresponding to the PCS transmission of Idle control characters.

Table K.29 - Idle input to scrambler

Sync [0:1]	64-bit payload, Hex [2:65]	Sync [0:1]	64-bit payload, Hex [2:65]	Sync [0:1]	64-bit payload, Hex [2:65]	Sync [0:1]	64-bit payload, Hex [2:65]
10	78000000_00000000	10	78000000_00000000	10	78000000_00000000	10	78000000_00000000
10	78000000_00000000	10	78000000_00000000	10	78000000_00000000	10	78000000_00000000
10	78000000_00000000	10	78000000_00000000	10	78000000_00000000	10	78000000_00000000
10	78000000_00000000	10	78000000_00000000	10	78000000_00000000	10	78000000_00000000
10	78000000_00000000	10	78000000_00000000	10	78000000_00000000	10	78000000_00000000
10	78000000_00000000	10	78000000_00000000	10	78000000_00000000	10	78000000_00000000
10	78000000_00000000	10	78000000_00000000	10	78000000_00000000	10	78000000_00000000
10	78000000_00000000	10	78000000_00000000	10	78000000_00000000	10	78000000_00000000
10	78000000_00000000	10	78000000_00000000	10	78000000_00000000	10	78000000_00000000
10	78000000_00000000	10	78000000_00000000	10	78000000_00000000	10	78000000_00000000
10	78000000_00000000	10	78000000_00000000	10	78000000_00000000	10	78000000_00000000
10	78000000_00000000	10	78000000_00000000	10	78000000_00000000	10	78000000_00000000
10	78000000_00000000	10	78000000_00000000	10	78000000_00000000	10	78000000_00000000
10	78000000_00000000	10	78000000_00000000	10	78000000_00000000	10	78000000_00000000
10	78000000_00000000	10	78000000_00000000	10	78000000_00000000	10	78000000_00000000
10	78000000_00000000	10	78000000_00000000	10	78000000_00000000	10	78000000_00000000
10	78000000_00000000	10	78000000_00000000	10	78000000_00000000	10	78000000_00000000
10	78000000_00000000	10	78000000_00000000	10	78000000_00000000	10	78000000_00000000
10	78000000_00000000	10	78000000_00000000	10	78000000_00000000	10	78000000_00000000
10	78000000_00000000	10	78000000_00000000	10	78000000_00000000	10	78000000_00000000
10	78000000_00000000	10	78000000_00000000	10	78000000_00000000	10	78000000_00000000

Table K.29 - Idle input to scrambler (Continued)

Sync [0:1]	64-bit payload, Hex [2:65]	Sync [0:1]	64-bit payload, Hex [2:65]	Sync [0:1]	64-bit payload, Hex [2:65]	Sync [0:1]	64-bit payload, Hex [2:65]
10	78000000_00000000	10	78000000_00000000	10	78000000_00000000	10	78000000_00000000
10	78000000_00000000	10	78000000_00000000	10	78000000_00000000	10	78000000_00000000
10	78000000_00000000	10	78000000_00000000	10	78000000_00000000	10	78000000_00000000
10	78000000_00000000	10	78000000_00000000	10	78000000_00000000	10	78000000_00000000
10	78000000_00000000	10	78000000_00000000	10	78000000_00000000	10	78000000_00000000
10	78000000_00000000	10	78000000_00000000	10	78000000_00000000	10	78000000_00000000
10	78000000_00000000	10	78000000_00000000	10	78000000_00000000	10	78000000_00000000
10	78000000_00000000	10	78000000_00000000	10	78000000_00000000	10	78000000_00000000
10	78000000_00000000	10	78000000_00000000	10	78000000_00000000	10	78000000_00000000
10	78000000_00000000	10	78000000_00000000	10	78000000_00000000	10	78000000_00000000
10	78000000_00000000	10	78000000_00000000	10	78000000_00000000	10	78000000_00000000
10	78000000_00000000	10	78000000_00000000	10	78000000_00000000	10	78000000_00000000
10	78000000_00000000	10	78000000_00000000	10	78000000_00000000	10	78000000_00000000
10	78000000_00000000	10	78000000_00000000	10	78000000_00000000	10	78000000_00000000
10	78000000_00000000	10	78000000_00000000	10	78000000_00000000	10	78000000_00000000
10	78000000_00000000	10	78000000_00000000	10	78000000_00000000	10	78000000_00000000
10	78000000_00000000	10	78000000_00000000	10	78000000_00000000	10	78000000_00000000
10	78000000_00000000	10	78000000_00000000	10	78000000_00000000	10	78000000_00000000
10	78000000_00000000	10	78000000_00000000	10	78000000_00000000	10	78000000_00000000
10	78000000_00000000	10	78000000_00000000	10	78000000_00000000	10	78000000_00000000

K.10.3 Output of scrambler/Input to the 64B/66B to 256B/257B transcoder

Table K.30 contains the sequence of 160 66-bit blocks corresponding to the scrambled PCS transmission of Idle control characters that are scrambled and are input to the 256B/257B transcoder. The initial value of the scrambler was set to 0x0.

Table K.30 - Output of scrambler

Sync [0:1]	64-bit payload, Hex [2:65]	Sync [0:1]	64-bit payload, Hex [2:65]	Sync [0:1]	64-bit payload, Hex [2:65]	Sync [0:1]	64-bit payload, Hex [2:65]
10	7800000000f0001e	10	7801e00000f0045e	10	7879e00880f1e45e	10	7779e1e88097e45e
10	777955e89917e536	10	776755ec29178336	10	7987540c2913c336	10	0187248c28f3c3c9
10	0198c48daef3c3c9	10	056cc4ec2efa2bc8	10	fb6ccf5c2f7c2ba0	10	1b6d2f5c9f3c3258
10	1a75af437f387d58	10	6395a0257ed87d58	10	d795b9a507b07d46	10	d76109bb61b193a6
10	d6810dff21c9ebae	10	2600ec1f2e36ea51	10	c6676a1f2e365aa5	10	df86eb7ec629a4a1
10	64368cf8c8a14540	10	84327cb8a95934d8	10	05cd9c43e646ad39	10	8cab9da3e2b21958
10	15220cca1cac121c	10	a4ba6aa3124df3fc	10	10be33236b5d8362	10	115a73dc13426c63
10	96ba73dc17b66c02	10	6eb39bdde94667ac	10	6f347bb5094783ec	10	df0c6245885ee3f3
10	30082ca5f1d8ec95	10	31e898a55c58f47d	10	489e98bfecac2263	10	207f77bfed486627
10	18077f371c298738	10	17e79ec97a4e0138	10	13132e5ce3a66858	10	050cdbe859900fb6

Table K.30 - Output of scrambler (Continued)

Sync [0:1]	64-bit payload, Hex [2:65]	Sync [0:1]	64-bit payload, Hex [2:65]	Sync [0:1]	64-bit payload, Hex [2:65]	Sync [0:1]	64-bit payload, Hex [2:65]
10	eb85da0909d4e60e	10	8b652b8e682f49f5	10	bd9abd09e0a94815	10	0d6e10e80048d962
10	f384abb2d7d151eb	10	fc854e1623ad7063	10	7514df682db63163	10	ed6cb669aa568197
10	f0793769ba409792	10	b5395b41b54f961b	10	b53c4f41648ffe73	10	b5dacfa5c4942972
10	453ac123c1802913	10	713348a246e8224d	10	705ff8d520e82cad	10	c5bfe511618054bb
10	353a44f1167f5a44	10	d4bdc2f1167feab0	10	b55c4390fe9014aa	10	0eedc416f018f10b
10	ee91345e11e16093	10	606ed5455e98f972	10	e90860a543ec4c7b	10	709ff1c80df2213f
10	cfe79641031780df	10	03e3bf417be7f0be	10	02181fbf85f81fbf	10	810c1fde0105f7df
10	8705fc6ffe73fc19	10	6683fc07ae3201a1	10	d7a365e8cf2f2ebe	10	4147246eb74921d8
10	f4a789ee63a1392e	10	8d2539eab55401d0	10	e424d2aef4c83d9c	10	2cdd3bc60a56dd7c
10	c35a5c386c31eb88	10	de4f6dcc1dc67cec	10	73e0fffea978fae3	10	7d6d0e5f98c462c3
10	9c721f23b62054d9	10	23eb88443a52e158	10	0a96b4cc24ad7b6b	10	45e469fffdd51202
10	fee1d5db70b94314	10	7694045a06bded15	10	690c6d5b85a95d80	10	8c10045a6b4f402b
10	c8d7881a8441a5e2	10	78ea85ead498ad95	10	97084bee0d0575f2	10	6608f168a5916d7b
10	2b7778f3920db03b	10	42fa2784f5e9fa9f	10	cf6232c845e06396	10	300772d65478eb69
10	d5744443cd9032fd	10	a28a30969f49ab09	10	f7b2b6f1c185a710	10	772eb73e41879973
10	cf2ec0a286780172	10	f6bcd8a37bed250c	10	91c1f294e26ac0c1	10	21b870b918f340a9
10	642dc8c76e1871c8	10	fdae013817e72e3d	10	63af8059830cd058	10	20e60fc07375da17
10	c1651ba8f2f44fc7	10	70a302a333f2b7d9	10	16a74da34e80b8de	10	974e69a21d00ab76
10	efa069d1adf59d68	10	33419f51ad01d932	10	0b3dd7d92460372d	10	053d36274207b12d
10	79c986b2db1fd853	10	6fd793066129bbfd	10	812692efb16cb245	10	eec66288d0f11dbe
10	d839400f41f71d36	10	68d3edea1116ea41	10	98d95750c68b22c8	10	efd8c274331703bf
10	6656b30bbb0c42bf	10	fadada6bbce51a4a	10	19cf50dbad750c27	10	bc8edcf3123a1456
10	bd9348ec23fe333e	10	c495c76e8205e43f	10	8075d068fe79e440	10	b488e9f71f1001fe
10	b4045dc439687716	10	f165a1e077ff0eff	10	e18786000000b0f4	10	19e18161e81ffe04
10	c3b067860e78e1ff	10	98051040610875c6	10	f98600f3cfee7dbf	10	fe1fe0088463503f
10	eef0c4816709ee72	10	c6ff338527f662d6	10	cd830d8c5003b3a8	10	0063647350ec2cc8
10	8678c48daa07c3a8	10	fd652cedd00a2066	10	faeb2f34cf7dcfe0	10	ab5536ac1e255247
10	f571e1a306be723e	10	62751425d35865b0	10	aee3b9bfb744ab58	10	bf80e6bb6055d7e2
10	eef90577d0a80ab1	10	29e00de148516c51	10	c293da8ab7de33c5	10	c9991eca7c1fc34f
10	8abf8d1998e5acf8	10	e4d28d3fc8a29b23	10	33320ac46ec0acd9	10	3c5f30420253882f

K.10.4 Output of 256B/257B transcoder with Alignment Marker insertion

Table K.31 contains the result of alignment marker insertion into the 64B/66B to 256B/257B transcoded bit stream. The italicized values appearing in the first row of the table denote the 257 bits (including the pad value of 0 in bit position [256]) of the Alignment Marker described in 5.5.3. In this example, the Remote Degrade (RD) field is set to 0.

Table K.31 - Output of 256B/257B transcoder with Alignment Marker

Header [0:4]	Payload, hex [5:64]	Payload, hex [65:128]	Payload, hex [129:192]	Payload, hex [193:256]
10000	62d080af9d2f7f5	5fc120aaa03edf54	0a48dcabf5b72354	753a9aab8ac56554
10000	700000000f0001e	7801e00000f0045e	7879e00880f1e45e	7779e1e88097e45e
10111	77955e89917e536	776755ec29178336	7987540c2913c336	0187248c28f3c3c9
01001	098c48daef3c3c9	056cc4ec2efa2bc8	fb6ccf5c2f7c2ba0	1b6d2f5c9f3c3258
10111	175af437f387d58	6395a0257ed87d58	d795b9a507b07d46	d76109bb61b193a6
11000	d810dff21c9ebae	2600ec1f2e36ea51	c6676a1f2e365aa5	df86eb7ec629a4a1
00011	6368cf8c8a14540	84327cb8a95934d8	05cd9c43e646ad39	8cab9da3e2b21958
10010	1220cca1cac121c	a4ba6aa3124df3fc	10be33236b5d8362	115a73dc13426c63
11011	9ba73dc17b66c02	6eb39bdde94667ac	6f347bb5094783ec	df0c6245885ee3f3
10000	3082ca5f1d8ec95	31e898a55c58f47d	489e98bfecac2263	207f77bfed486627
10000	1077f371c298738	17e79ec97a4e0138	13132e5ce3a66858	050cdbe859900fb6
01000	e85da0909d4e60e	8b652b8e682f49f5	bd9abd09e0a94815	0d6e10e80048d962
11000	f84abb2d7d151eb	fc854e1623ad7063	7514df682db63163	ed6cb669aa568197
10111	f793769ba409792	b5395b41b54f961b	b53c4f41648ffe73	b5dacfa5c4942972
00011	43ac123c1802913	713348a246e8224d	705ff8d520e82cad	c5bfe511618054bb
10011	33a44f1167f5a44	d4bdc2f1167feab0	b55c4390fe9014aa	0eedc416f018f10b
01001	e91345e11e16093	606ed5455e98f972	e90860a543ec4c7b	709ff1c80df2213f
01110	ce79641031780df	03e3bf417be7f0be	02181fbf85f81fbf	810c1fde0105f7df
00000	805fc6ffe73fc19	6683fc07ae3201a1	d7a365e8cf2f2ebe	4147246eb74921d8
11010	fa789ee63a1392e	8d2539eab55401d0	e424d2aef4c83d9c	2cdd3bc60a56dd7c
00101	c5a5c386c31eb88	de4f6dcc1dc67cec	73e0fffea978fae3	7d6d0e5f98c462c3
10111	9721f23b62054d9	23eb88443a52e158	0a96b4cc24ad7b6b	45e469fffdd51202
11110	fe1d5db70b94314	7694045a06bded15	690c6d5b85a95d80	8c10045a6b4f402b
01101	cd7881a8441a5e2	78ea85ead498ad95	97084bee0d0575f2	6608f168a5916d7b
00111	27778f3920db03b	42fa2784f5e9fa9f	cf6232c845e06396	300772d65478eb69
10111	d744443cd9032fd	a28a30969f49ab09	f7b2b6f1c185a710	772eb73e41879973

Table K.31 - Output of 256B/257B transcoder with Alignment Marker (Continued)

Header [0:4]	Payload, hex [5:64]	Payload, hex [65:128]	Payload, hex [129:192]	Payload, hex [193:256]
00010	c2ec0a286780172	f6bcd8a37bed250c	91c1f294e26ac0c1	21b870b918f340a9
00010	62dc8c76e1871c8	fdae013817e72e3d	63af8059830cd058	20e60fc07375da17
00110	c651ba8f2f44fc7	70a302a333f2b7d9	16a74da34e80b8de	974e69a21d00ab76
01010	ea069d1adf59d68	33419f51ad01d932	0b3dd7d92460372d	053d36274207b12d
11100	7c986b2db1fd853	6fd793066129bbfd	812692efb16cb245	eec66288d0f11dbe
10011	d39400f41f71d36	68d3edea1116ea41	98d95750c68b22c8	efd8c274331703bf
00101	656b30bbb0c42bf	fadada6bbce51a4a	19cf50dbad750c27	bc8edcf3123a1456
11001	b9348ec23fe333e	c495c76e8205e43f	8075d068fe79e440	b488e9f71f1001fe
10000	b045dc439687716	f165a1e077ff0eff	e18786000000b0f4	19e18161e81ffe04
01011	cb067860e78e1ff	98051040610875c6	f98600f3cfee7dbf	fe1fe0088463503f
01111	ef0c4816709ee72	c6ff338527f662d6	cd830d8c5003b3a8	0063647350ec2cc8
00111	878c48daa07c3a8	fd652cedd00a2066	faeb2f34cf7dcfe0	ab5536ac1e255247
10111	f71e1a306be723e	62751425d35865b0	aee3b9bfb744ab58	bf80e6bb6055d7e2
01111	ef90577d0a80ab1	29e00de148516c51	c293da8ab7de33c5	c9991eca7c1fc34f

K.10.5 Output of 10-bit symbol round-robin distribution for message A

Table K.32 contains the result of interleaving the output of the transcoder and distributing 10-bit symbols in round robin fashion to form message A, which is a 5 140-bit message.

Table K.32 - Message A

Message A [0:139]
83101e96ab90407aa11bfac6a9d571b2870
003009e2003c1e77800f17b9e20245ef344
fcbbbbd8bccf2a0225b0e494779263daf0f
56fb0a2bedf5df0018bdf3d62ad6feeaf2b
2bcfabcb4a83dae4df633610d873ae03b2e
a96677ca5a7e37ea691b19c508113e52a6c
9b1f35a65547d0c21332ac3296a893fc38c
6b4d85a7046c737ee2cd3777ba318d3dd28
f658cc407ec225f3b31e2958f5218b2b232
dded489c3be3839fce4bc0098cb93300adf
321b25d82760d94e6927d9827948350e923

Table K.32 - Message A (Continued)

2c557bebd72a44783229414626b4d3b437f
dda404ad5bd521bf1164f9dda9702968491
005b8917749affc41e567fcb0a94cef13d6
d48bc7fc2d43ba4aa371f004248bc2b040d
a2b1f74814f636ef8dbe9fa7940c0df8c17
fc021eff81e05fd415f0bfbf38301ff5c0d
f4746e5e0a8de491ae273a0ba53ad51d093
ef4f6cdf186dcb8e1c6346edbee1d807d52
d72dafccc5e5f238152321252602b492b6b
91bfd483f0b6ca1ed22d7beb4daad401002
d6815d7aa1a5e3aeae2b972fb05499f1564
7b2efc92077d09efd5ec6400c1825a3c537
110d9bf4a3a7eb0ecb1c69f72cf879c5a05
cf3979b3dfa1a0f9c606371c8680988c461
8fc047e4f5f820c05b980736863351a26e1
153e5c8a9b741bd7343a5baa04699dcd351
0760b5f460b41360812d9316db0beb0ccdd
02577d96f7c50787d25041f4dd3e84ea636
50ec8efc9d173ca59b615ff5bde749e7b75
8639179b4266c8effbec71c200ff5d3fa44
2237100458b8b43de10ffffff0c001eb0c
3d3f0cb2188e260040216f803feefffe211
03de10b3dc37f0ab319b6c407402c887590
e31aa0e965b7620ebb34f70abdaa251ecf0
0d51fea2e9cb7717f6557f35dab93f0542a
Message A [0:99]
b10034871493ead33e66ca7f0

K.10.6 Output of 10-bit symbol round-robin distribution for message B

Table K.33 contains the result of interleaving the output of the transcoder and distributing 10-bit symbols in round robin fashion to form message B, which is a 5 140-bit message.

Table K.33 - Message B

Message B [0:139]
5a17ceffe05576f14a556e63a35562a9000
00c0701c000461e088797747a97faeaaf22
9b0ea14866c3985e183046278a4048bcc90
312eff22cc0bebadb5c90cb8be85c30c501
db2c6b703da8f086c09dd83fc9e898c1cdb
1c5a8e36976eb184a06dc668a21971c980b
e208dcc73b15ab18821c484ba8c5f342f23
76211cf7428f5392f601672f4cf79a6a3c1
be122bddc02c876952265c51f9ebfb2241f
bfe1980be614f02cf7499c26571d0b8650b
07ce88254ea2eb80bf5baf60a056e100196
f09962a3e4c2d6b6eafbb6f1f96d5232de4
9ba5e53906f96d4f423f3b73e495c8d6383
48a661204482daa4178b28b00dce4459e44
f7116aad5c43c143b81663f4f688f026f6a
bd0b910ea198c4f90110ecd9017bc0bf6f9
be20785fef0c380f7d0037e7fb37801903a
b2de55f0e45b83be9ee64e4d27a9403912a
321c24eca55f2d20db5cc9e60cfb9ffffc7
6f87218a1d21ed84dbae43b85a9730d7917
9ff542f7ab85e28a000d68a18dc2bb608b4
7a2dc2044189e85525952120dd7e08a296d
e4c791b5a14f2f43f9198bdcb0ef2ad6f5d
43c0ca282549a7db6c61107ad41a5c17450
00ad7519a448e52354243871e54adcdbb1c
6bb81cba3a164cd080fcdd573a3797f8d18
665bed4d1a170ba34405cada7df5a019eb4
930f7924dc53c9d7b38f35a3f9b726097fb

Table K.33 - Message B (Continued)

34b629218c46a3bf4c0fdc668b791606557
1a2c8630330ef2b17621f5935ca10ca1aba
4f76e2462b93708331256e9798041a79c2d
e9fc4fe88b1cae2b2c0e87430000160cc2c
0fc8b19ce77fc511875c61b3c9f7e102235
dfe24e1396e653f5ac188a19d0c79a859e1
48c1f8fcb30099bb2f3dfe154c1d49fbb46
f38c4a12b085773ba2b1072c0bf2f9df40a
Message B [0:99]
a79e1459c26a3de1711ef074f

K.10.7 Output of Reed-Solomon encoding for message A

Table K.34 contains the result of encoding Message A using a Reed-Solomon encoder (RS(544,514)) to form a 5 440-bit codeword.

Table K.34 - Message A

Message A [0:139]
83101e96ab90407aa11bfac6a9d571b2870
003009e2003c1e77800f17b9e20245ef344
fcbbbbd8bccf2a0225b0e494779263daf0f
56fb0a2bedf5df0018bdf3d62ad6feeaf2b
2bcfabcb4a83dae4df633610d873ae03b2e
a96677ca5a7e37ea691b19c508113e52a6c
9b1f35a65547d0c21332ac3296a893fc38c
6b4d85a7046c737ee2cd3777ba318d3dd28
f658cc407ec225f3b31e2958f5218b2b232
dded489c3be3839fce4bc0098cb93300adf
321b25d82760d94e6927d9827948350e923
2c557bebd72a44783229414626b4d3b437f
dda404ad5bd521bf1164f9dda9702968491
005b8917749affc41e567fcb0a94cef13d6
d48bc7fc2d43ba4aa371f004248bc2b040d
a2b1f74814f636ef8dbe9fa7940c0df8c17
fc021eff81e05fd415f0bfbf38301ff5c0d
f4746e5e0a8de491ae273a0ba53ad51d093

Table K.34 - Message A (Continued)

ef4f6cdf186dcb8e1c6346edbee1d807d52
d72dafccc5e5f238152321252602b492b6b
91bfd483f0b6ca1ed22d7beb4daad401002
d6815d7aa1a5e3aeae2b972fb05499f1564
7b2efc92077d09efd5ec6400c1825a3c537
110d9bf4a3a7eb0ecb1c69f72cf879c5a05
cf3979b3dfa1a0f9c606371c8680988c461
8fc047e4f5f820c05b980736863351a26e1
153e5c8a9b741bd7343a5baa04699dcd351
0760b5f460b41360812d9316db0beb0ccdd
02577d96f7c50787d25041f4dd3e84ea636
50ec8efc9d173ca59b615ff5bde749e7b75
8639179b4266c8effbec71c200ff5d3fa44
2237100458b8b43de10ffffff0c001eb0c
3d3f0cb2188e260040216f803feefffe211
03de10b3dc37f0ab319b6c407402c887590
e31aa0e965b7620ebb34f70abdaa251ecf0
0d51fea2e9cb7717f6557f35dab93f0542a
Message A [0:99]
b10034871493ead33e66ca7f0
Parity[0:299]
b3531eb09384d7bc5a7eaaedab8431637d7a93050e63e37b8200bf5844084c97bd01ec420da

K.10.8 Output of Reed-Solomon encoding for message B

Table K.35 contains the result of encoding Message B using a Reed-Solomon encoder (RS(544,514)) to form a 5 440-bit codeword.

Table K.35 - Message B

Message B [0:139]
5a17ceffe05576f14a556e63a35562a9000
00c0701c000461e088797747a97faeaaf22
9b0ea14866c3985e183046278a4048bcc90
312eff22cc0bebadb5c90cb8be85c30c501
db2c6b703da8f086c09dd83fc9e898c1cdb
1c5a8e36976eb184a06dc668a21971c980b
e208dcc73b15ab18821c484ba8c5f342f23
76211cf7428f5392f601672f4cf79a6a3c1
be122bddc02c876952265c51f9ebfb2241f
bfe1980be614f02cf7499c26571d0b8650b
07ce88254ea2eb80bf5baf60a056e100196
f09962a3e4c2d6b6eafbb6f1f96d5232de4
9ba5e53906f96d4f423f3b73e495c8d6383
48a661204482daa4178b28b00dce4459e44
f7116aad5c43c143b81663f4f688f026f6a
bd0b910ea198c4f90110ecd9017bc0bf6f9
be20785fef0c380f7d0037e7fb37801903a
b2de55f0e45b83be9ee64e4d27a9403912a
321c24eca55f2d20db5cc9e60cfb9ffffc7
6f87218a1d21ed84dbae43b85a9730d7917
9ff542f7ab85e28a000d68a18dc2bb608b4
7a2dc2044189e85525952120dd7e08a296d
e4c791b5a14f2f43f9198bdcb0ef2ad6f5d
43c0ca282549a7db6c61107ad41a5c17450
00ad7519a448e52354243871e54adcdbb1c
6bb81cba3a164cd080fcdd573a3797f8d18
665bed4d1a170ba34405cada7df5a019eb4
930f7924dc53c9d7b38f35a3f9b726097fb
34b629218c46a3bf4c0fdc668b791606557
1a2c8630330ef2b17621f5935ca10ca1aba

Table K.35 - Message B (Continued)

4f76e2462b93708331256e9798041a79c2d
e9fc4fe88b1cae2b2c0e87430000160cc2c
0fc8b19ce77fc511875c61b3c9f7e102235
dfe24e1396e653f5ac188a19d0c79a859e1
48c1f8fcb30099bb2f3dfe154c1d49fbb46
f38c4a12b085773ba2b1072c0bf2f9df40a
Message B [0:99]
a79e1459c26a3de1711ef074f
Parity[0:299]
3ba1fc64a9642b064ec2206bf5597a71920d125482897322eac9aecca9b80144e05060a5e50

K.10.9 Output of 10-bit symbol forwarding

Table K.36 contains the result of de-interleaving Message A and Message B to form a 10 880-bit codeword.

Table K.36 - 10 880-bit codeword

Message [0:139]
831684057ce97bfaafe09055501f6faa052
46e55fadb91aa3a9d4d55c562b2aa41c000
00003c00079e007800003c01179e1e78022
03c79179dde787a2025f917aeef2abd1322
fca6ceeceabd8522f066cf30ea818522786
6c030e491851e787929098c48daef3c3c90
56cc4ec2efa2bc8fb6ccf5c2f7c2ba01b6d
2f5c9f3c3258b8bad7a1bf9c3eac31cad01
2bf6c3eac6bcadcd283d83ea36bb084ddb0
d8c9d36360437fc8727aeb89803b07cb8db
a947199da87cb8d96a977e1badfb18a6928
46c6d19f191428a810864f97152b269b00b
9b3887cc8d5a7319573b47c56432b121220
cca1cac121ca4ba6aa3124df3fc10be3323
6b5d8362115a73dc13426c63dcdd39ee0bd
b36013759cdeef4a333d6379a3dda84a3c1
f66f863122c42f71f9c0c20b297c763b254
c7a262957163d1f5227a62ffb2b0898c81f

Table K.36 - 10 880-bit codeword (Continued)

ddeffb521989e020efe6e38530e702fcf3d
92f49c027026265cb9c74cd0b00a19b7d0b
3201f6c8e85da0909d4e60e8b652b8e682f
49f5bd9abd09e0a948150d6e10e80048d96
2c7c255d96be8a8f5fe42a70b11d6b831ba
8a6fb416db18b1f6b65b34d52b40cbdfde4
dda6e9025e4ad4e56d06d53e586ed4f13d0
5923ff9ced76b3e971250a5c86875824783
005226e26691448dd0449ae0bff1aa41d05
95b8b7fca22c300a977333a44f1167f5a44
d4bdc2f1167feab0b55c4390fe9014aa0ee
dc416f018f10b4f489a2f08f0b049b0376a
a2af4c7cb974843052a1f6263db84ff8e40
6f9109fbb39e59040c5e037c0f8efd05ef9
fc2f808607efe17e07efe04307f780417df
7c100bf8dffce7f832cd07f80f5c640343a
f46cbd19e5e5d7c828e48dd6e9243b1afa7
89ee63a1392e8d2539eab55401d0e424d2a
ef4c83d9c2cdd3bc60a56dd7c2e2d2e1c36
18f5c46f27b6e60ee33e7639f07fff54bc7
d71beb6872fcc623161de5c87c8ed881536
48fae2110e94b85602a5ad33092b5edad17
91a7fff754480bdfc3abb6e1728628ed280
8b40d7bda2ad218dab70b52bb01182008b4
d69e8056dcd7881a8441a5e278ea85ead49
8ad9597084bee0d0575f26608f168a5916d
7b393bbc79c906d81da17d13c27af4fd4fe
7b1196422f031cb1803b96b2a3c75b4df5d
1110f3640cbf68a28c25a7d26ac27decadb
c706169c41dcbadcf9061e65cc585d81450
cf002e5ed79b146f7da4a192383e529c4d5
81824370e17231e68152262dc8c76e1871c
8fdae013817e72e3d63af8059830cd05820
e60fc07375da1736328dd4797a27e3b8518
15199f95bec8b53a6d1a7405c6f4ba734d1

Table K.36 - 10 880-bit codeword (Continued)

0e8055bb2ba81a746b7d675a0cd067d46b4
0764c82cf75f649180dcb414f4d89d081ec
4b78f930d65b63fb0a6dfaf260cc25377fb
024d25df62d9648bdd8cc511a1e23b7d3d3
9400f41f71d3668d3edea1116ea4198d957
50c68b22c8efd8c274331703bf2b2b5985d
d86215ffd6d6d35de728d250ce7a86dd6ba
8613de476e79891d0a2b66e4d23b08ff8cc
fb12571dba081790fe01d741a3f9e79102d
223a7dc7c4007fa1608bb8872d0ee2de2cb
43c0effe1dffc30f0c00000161e833c302c
3d03ffc08bcb067860e78e1ff9805104061
0875c6f98600f3cfee7dbffe1fe00884635
03f7f786240b384f739637f99c293fb316b
66c186c62801d9d40031b239a87616641e1
e31236a81f0ea3f594b3b74028819bebacb
cd33df73f82ad54dab07895491efee3c346
0d7ce47cc4ea284ba6b0cb615dc7737f6e8
956b17f01cd76c0abafc4fef90577d0a80a
b129e00de148516c51c293da8ab7de33c5c
Message [0:59]
9991eca7c1fc34f
Parity[0:139]
b34ee4c61feb31924ca984d905eeb0c5993
9fac2aac81b6abfb85560c57a635c6f5d20
a9344c16540e60a8f897378c8e0aea00b26
fd6ec8472a021b84c8055ec4ed00147b060
Parity[0:39]
4229736a50

K.11 Single lane 128GFC using Interleaved Reed-Solomon (RS(544,514)) and Bit Interleaving – Alignment Marker and Idle Pattern

K.11.1 Overview

This annex provides an example transmitted bit stream produced by 64B66B to 256B/257B transcoding (see 5.5.2), alignment marker mapping and insertion (see 5.5.3), 10-bit symbol round-robin distribution (see 5.10.3), Reed-Solomon encoding (see 5.10.3), and Bit Interleaving (see 5.10.6.1). Results of each computation are provided in a tabular form. The contents of the tables are transmitted from left to right within each row starting from the top row and ending at the bottom row. The tables contain both binary and hexadecimal representations of the data. For the hexadecimal representation, the most significant bit of each hex symbol is transmitted first.

K.11.2 Input to the 64B/66B scrambler

Table K.37 contains the sequence of 160 66-bit blocks corresponding to the PCS transmission of Idle control characters.

Table K.37 - Idle input to scrambler

Sync [0:1]	64-bit payload, Hex [2:65]	Sync [0:1]	64-bit payload, Hex [2:65]	Sync [0:1]	64-bit payload, Hex [2:65]	Sync [0:1]	64-bit payload, Hex [2:65]
10	78000000_00000000	10	78000000_00000000	10	78000000_00000000	10	78000000_00000000
10	78000000_00000000	10	78000000_00000000	10	78000000_00000000	10	78000000_00000000
10	78000000_00000000	10	78000000_00000000	10	78000000_00000000	10	78000000_00000000
10	78000000_00000000	10	78000000_00000000	10	78000000_00000000	10	78000000_00000000
10	78000000_00000000	10	78000000_00000000	10	78000000_00000000	10	78000000_00000000
10	78000000_00000000	10	78000000_00000000	10	78000000_00000000	10	78000000_00000000
10	78000000_00000000	10	78000000_00000000	10	78000000_00000000	10	78000000_00000000
10	78000000_00000000	10	78000000_00000000	10	78000000_00000000	10	78000000_00000000
10	78000000_00000000	10	78000000_00000000	10	78000000_00000000	10	78000000_00000000
10	78000000_00000000	10	78000000_00000000	10	78000000_00000000	10	78000000_00000000
10	78000000_00000000	10	78000000_00000000	10	78000000_00000000	10	78000000_00000000
10	78000000_00000000	10	78000000_00000000	10	78000000_00000000	10	78000000_00000000
10	78000000_00000000	10	78000000_00000000	10	78000000_00000000	10	78000000_00000000
10	78000000_00000000	10	78000000_00000000	10	78000000_00000000	10	78000000_00000000
10	78000000_00000000	10	78000000_00000000	10	78000000_00000000	10	78000000_00000000
10	78000000_00000000	10	78000000_00000000	10	78000000_00000000	10	78000000_00000000
10	78000000_00000000	10	78000000_00000000	10	78000000_00000000	10	78000000_00000000
10	78000000_00000000	10	78000000_00000000	10	78000000_00000000	10	78000000_00000000
10	78000000_00000000	10	78000000_00000000	10	78000000_00000000	10	78000000_00000000
10	78000000_00000000	10	78000000_00000000	10	78000000_00000000	10	78000000_00000000
10	78000000_00000000	10	78000000_00000000	10	78000000_00000000	10	78000000_00000000
10	78000000_00000000	10	78000000_00000000	10	78000000_00000000	10	78000000_00000000
10	78000000_00000000	10	78000000_00000000	10	78000000_00000000	10	78000000_00000000
10	78000000_00000000	10	78000000_00000000	10	78000000_00000000	10	78000000_00000000
10	78000000_00000000	10	78000000_00000000	10	78000000_00000000	10	78000000_00000000
10	78000000_00000000	10	78000000_00000000	10	78000000_00000000	10	78000000_00000000
10	78000000_00000000	10	78000000_00000000	10	78000000_00000000	10	78000000_00000000
10	78000000_00000000	10	78000000_00000000	10	78000000_00000000	10	78000000_00000000

Table K.37 - Idle input to scrambler (Continued)

Sync [0:1]	64-bit payload, Hex [2:65]	Sync [0:1]	64-bit payload, Hex [2:65]	Sync [0:1]	64-bit payload, Hex [2:65]	Sync [0:1]	64-bit payload, Hex [2:65]
10	78000000_00000000	10	78000000_00000000	10	78000000_00000000	10	78000000_00000000
10	78000000_00000000	10	78000000_00000000	10	78000000_00000000	10	78000000_00000000
10	78000000_00000000	10	78000000_00000000	10	78000000_00000000	10	78000000_00000000
10	78000000_00000000	10	78000000_00000000	10	78000000_00000000	10	78000000_00000000
10	78000000_00000000	10	78000000_00000000	10	78000000_00000000	10	78000000_00000000
10	78000000_00000000	10	78000000_00000000	10	78000000_00000000	10	78000000_00000000
10	78000000_00000000	10	78000000_00000000	10	78000000_00000000	10	78000000_00000000
10	78000000_00000000	10	78000000_00000000	10	78000000_00000000	10	78000000_00000000
10	78000000_00000000	10	78000000_00000000	10	78000000_00000000	10	78000000_00000000
10	78000000_00000000	10	78000000_00000000	10	78000000_00000000	10	78000000_00000000
10	78000000_00000000	10	78000000_00000000	10	78000000_00000000	10	78000000_00000000
10	78000000_00000000	10	78000000_00000000	10	78000000_00000000	10	78000000_00000000
10	78000000_00000000	10	78000000_00000000	10	78000000_00000000	10	78000000_00000000

K.11.3 Output of scrambler/Input to the 64B/66B to 256B/257B transcoder

Table K.38 contains the sequence of 160 66-bit blocks corresponding to the scrambled PCS transmission of Idle control characters that are scrambled and are input to the 256B/257B transcoder. The initial value of the scrambler was set to 0x0.

Table K.38 - Output of scrambler

Sync [0:1]	64-bit payload, Hext [2:65]	Sync [0:1]	64-bit payload, Hext [2:65]	Sync [0:1]	64-bit payload, Hext [2:65]	Sync [0:1]	64-bit payload, Hext [2:65]
10	7800000000f0001e	10	7801e00000f0045e	10	7879e00880f1e45e	10	7779e1e88097e45e
10	777955e89917e536	10	776755ec29178336	10	7987540c2913c336	10	0187248c28f3c3c9
10	0198c48daef3c3c9	10	056cc4ec2efa2bc8	10	fb6ccf5c2f7c2ba0	10	1b6d2f5c9f3c3258
10	1a75af437f387d58	10	6395a0257ed87d58	10	d795b9a507b07d46	10	d76109bb61b193a6
10	d6810dff21c9ebae	10	2600ec1f2e36ea51	10	c6676a1f2e365aa5	10	df86eb7ec629a4a1
10	64368cf8c8a14540	10	84327cb8a95934d8	10	05cd9c43e646ad39	10	8cab9da3e2b21958
10	15220cca1cac121c	10	a4ba6aa3124df3fc	10	10be33236b5d8362	10	115a73dc13426c63
10	96ba73dc17b66c02	10	6eb39bdde94667ac	10	6f347bb5094783ec	10	df0c6245885ee3f3
10	30082ca5f1d8ec95	10	31e898a55c58f47d	10	489e98bfecac2263	10	207f77bfed486627
10	18077f371c298738	10	17e79ec97a4e0138	10	13132e5ce3a66858	10	050cdbe859900fb6
10	eb85da0909d4e60e	10	8b652b8e682f49f5	10	bd9abd09e0a94815	10	0d6e10e80048d962
10	f384abb2d7d151eb	10	fc854e1623ad7063	10	7514df682db63163	10	ed6cb669aa568197
10	f0793769ba409792	10	b5395b41b54f961b	10	b53c4f41648ffe73	10	b5dacfa5c4942972
10	453ac123c1802913	10	713348a246e8224d	10	705ff8d520e82cad	10	c5bfe511618054bb
10	353a44f1167f5a44	10	d4bdc2f1167feab0	10	b55c4390fe9014aa	10	0eedc416f018f10b
10	ee91345e11e16093	10	606ed5455e98f972	10	e90860a543ec4c7b	10	709ff1c80df2213f
10	cfe79641031780df	10	03e3bf417be7f0be	10	02181fbf85f81fbf	10	810c1fde0105f7df

Table K.38 - Output of scrambler (Continued)

Sync [0:1]	64-bit payload, Hext [2:65]	Sync [0:1]	64-bit payload, Hext [2:65]	Sync [0:1]	64-bit payload, Hext [2:65]	Sync [0:1]	64-bit payload, Hext [2:65]
10	8705fc6ffe73fc19	10	6683fc07ae3201a1	10	d7a365e8cf2f2ebe	10	4147246eb74921d8
10	f4a789ee63a1392e	10	8d2539eab55401d0	10	e424d2aef4c83d9c	10	2cdd3bc60a56dd7c
10	c35a5c386c31eb88	10	de4f6dcc1dc67cec	10	73e0fffea978fae3	10	7d6d0e5f98c462c3
10	9c721f23b62054d9	10	23eb88443a52e158	10	0a96b4cc24ad7b6b	10	45e469fffdd51202
10	fee1d5db70b94314	10	7694045a06bded15	10	690c6d5b85a95d80	10	8c10045a6b4f402b
10	c8d7881a8441a5e2	10	78ea85ead498ad95	10	97084bee0d0575f2	10	6608f168a5916d7b
10	2b7778f3920db03b	10	42fa2784f5e9fa9f	10	cf6232c845e06396	10	300772d65478eb69
10	d5744443cd9032fd	10	a28a30969f49ab09	10	f7b2b6f1c185a710	10	772eb73e41879973
10	cf2ec0a286780172	10	f6bcd8a37bed250c	10	91c1f294e26ac0c1	10	21b870b918f340a9
10	642dc8c76e1871c8	10	fdae013817e72e3d	10	63af8059830cd058	10	20e60fc07375da17
10	c1651ba8f2f44fc7	10	70a302a333f2b7d9	10	16a74da34e80b8de	10	974e69a21d00ab76
10	efa069d1adf59d68	10	33419f51ad01d932	10	0b3dd7d92460372d	10	053d36274207b12d
10	79c986b2db1fd853	10	6fd793066129bbfd	10	812692efb16cb245	10	eec66288d0f11dbe
10	d839400f41f71d36	10	68d3edea1116ea41	10	98d95750c68b22c8	10	efd8c274331703bf
10	6656b30bbb0c42bf	10	fadada6bbce51a4a	10	19cf50dbad750c27	10	bc8edcf3123a1456
10	bd9348ec23fe333e	10	c495c76e8205e43f	10	8075d068fe79e440	10	b488e9f71f1001fe
10	b4045dc439687716	10	f165a1e077ff0eff	10	e18786000000b0f4	10	19e18161e81ffe04
10	c3b067860e78e1ff	10	98051040610875c6	10	f98600f3cfee7dbf	10	fe1fe0088463503f
10	eef0c4816709ee72	10	c6ff338527f662d6	10	cd830d8c5003b3a8	10	0063647350ec2cc8
10	8678c48daa07c3a8	10	fd652cedd00a2066	10	faeb2f34cf7dcfe0	10	ab5536ac1e255247
10	f571e1a306be723e	10	62751425d35865b0	10	aee3b9bfb744ab58	10	bf80e6bb6055d7e2
10	eef90577d0a80ab1	10	29e00de148516c51	10	c293da8ab7de33c5	10	c9991eca7c1fc34f
10	8abf8d1998e5acf8	10	e4d28d3fc8a29b23	10	33320ac46ec0acd9	10	3c5f30420253882f

K.11.4 Output of 256B/257B transcoder with Alignment Marker insertion

Table K.39 contains the result of alignment marker insertion into the 64B/66B to 256B/257B transcoded bit stream. The italicized values appearing in the first row of the table denote the 257 bits (including the pad value of 0 in bit position [256]) of the Alignment Marker described in 5.5.3. In this example, the Remote Degrade (RD) field is set to 0.

Table K.39 - Output of 256B/257B transcoder with Alignment Marker

Header [0:4]	Payload, hex [5:64]	Payload, hex [65:128]	Payload, hex [129:192]	Payload, hex [193:256]
10010	30b11f00dcfcee1	c7f90027e3d86fe0	819578e1f766a821	ef443dfdc10bbe20
10000	700000000f0001e	7801e00000f0045e	7879e00880f1e45e	7779e1e88097e45e
10111	77955e89917e536	776755ec29178336	7987540c2913c336	0187248c28f3c3c9
01001	098c48daef3c3c9	056cc4ec2efa2bc8	fb6ccf5c2f7c2ba0	1b6d2f5c9f3c3258
10111	175af437f387d58	6395a0257ed87d58	d795b9a507b07d46	d76109bb61b193a6
11000	d810dff21c9ebae	2600ec1f2e36ea51	c6676a1f2e365aa5	df86eb7ec629a4a1
00011	6368cf8c8a14540	84327cb8a95934d8	05cd9c43e646ad39	8cab9da3e2b21958
10010	1220cca1cac121c	a4ba6aa3124df3fc	10be33236b5d8362	115a73dc13426c63
11011	9ba73dc17b66c02	6eb39bdde94667ac	6f347bb5094783ec	df0c6245885ee3f3
10000	3082ca5f1d8ec95	31e898a55c58f47d	489e98bfecac2263	207f77bfed486627
10000	1077f371c298738	17e79ec97a4e0138	13132e5ce3a66858	050cdbe859900fb6
01000	e85da0909d4e60e	8b652b8e682f49f5	bd9abd09e0a94815	0d6e10e80048d962
11000	f84abb2d7d151eb	fc854e1623ad7063	7514df682db63163	ed6cb669aa568197
10111	f793769ba409792	b5395b41b54f961b	b53c4f41648ffe73	b5dacfa5c4942972
00011	43ac123c1802913	713348a246e8224d	705ff8d520e82cad	c5bfe511618054bb
10011	33a44f1167f5a44	d4bdc2f1167feab0	b55c4390fe9014aa	0eedc416f018f10b
01001	e91345e11e16093	606ed5455e98f972	e90860a543ec4c7b	709ff1c80df2213f
01110	ce79641031780df	03e3bf417be7f0be	02181fbf85f81fbf	810c1fde0105f7df
00000	805fc6ffe73fc19	6683fc07ae3201a1	d7a365e8cf2f2ebe	4147246eb74921d8
11010	fa789ee63a1392e	8d2539eab55401d0	e424d2aef4c83d9c	2cdd3bc60a56dd7c
00101	c5a5c386c31eb88	de4f6dcc1dc67cec	73e0fffea978fae3	7d6d0e5f98c462c3
10111	9721f23b62054d9	23eb88443a52e158	0a96b4cc24ad7b6b	45e469fffdd51202
11110	fe1d5db70b94314	7694045a06bded15	690c6d5b85a95d80	8c10045a6b4f402b
01101	cd7881a8441a5e2	78ea85ead498ad95	97084bee0d0575f2	6608f168a5916d7b
00111	27778f3920db03b	42fa2784f5e9fa9f	cf6232c845e06396	300772d65478eb69
10111	d744443cd9032fd	a28a30969f49ab09	f7b2b6f1c185a710	772eb73e41879973

Table K.39 - Output of 256B/257B transcoder with Alignment Marker (Continued)

Header [0:4]	Payload, hex [5:64]	Payload, hex [65:128]	Payload, hex [129:192]	Payload, hex [193:256]
00010	c2ec0a286780172	f6bcd8a37bed250c	91c1f294e26ac0c1	21b870b918f340a9
00010	62dc8c76e1871c8	fdae013817e72e3d	63af8059830cd058	20e60fc07375da17
00110	c651ba8f2f44fc7	70a302a333f2b7d9	16a74da34e80b8de	974e69a21d00ab76
01010	ea069d1adf59d68	33419f51ad01d932	0b3dd7d92460372d	053d36274207b12d
11100	7c986b2db1fd853	6fd793066129bbfd	812692efb16cb245	eec66288d0f11dbe
10011	d39400f41f71d36	68d3edea1116ea41	98d95750c68b22c8	efd8c274331703bf
00101	656b30bbb0c42bf	fadada6bbce51a4a	19cf50dbad750c27	bc8edcf3123a1456
11001	b9348ec23fe333e	c495c76e8205e43f	8075d068fe79e440	b488e9f71f1001fe
10000	b045dc439687716	f165a1e077ff0eff	e18786000000b0f4	19e18161e81ffe04
01011	cb067860e78e1ff	98051040610875c6	f98600f3cfee7dbf	fe1fe0088463503f
01111	ef0c4816709ee72	c6ff338527f662d6	cd830d8c5003b3a8	0063647350ec2cc8
00111	878c48daa07c3a8	fd652cedd00a2066	faeb2f34cf7dcfe0	ab5536ac1e255247
10111	f71e1a306be723e	62751425d35865b0	aee3b9bfb744ab58	bf80e6bb6055d7e2
01111	ef90577d0a80ab1	29e00de148516c51	c293da8ab7de33c5	c9991eca7c1fc34f

K.11.5 Output of 10-bit symbol round-robin distribution of message A

Table K.40 contains the result of interleaving the output of the transcoder and distributing 10-bit symbols in round robin fashion to form message A, which is a 5 140-bit message (see 5.10.3).

Table K.40 - Message A

Message A [0:139]
91a3ee7c388007bf06affb904a23b8df070
003009e2003c1e77800f17b9e20245ef344
fcbbbbd8bccf2a0225b0e494779263daf0f
56fb0a2bedf5df0018bdf3d62ad6feeaf2b
2bcfabcb4a83dae4df633610d873ae03b2e
a96677ca5a7e37ea691b19c508113e52a6c
9b1f35a65547d0c21332ac3296a893fc38c
6b4d85a7046c737ee2cd3777ba318d3dd28
f658cc407ec225f3b31e2958f5218b2b232
dded489c3be3839fce4bc0098cb93300adf
321b25d82760d94e6927d9827948350e923

Table K.40 - Message A (Continued)

2c557bebd72a44783229414626b4d3b437f
dda404ad5bd521bf1164f9dda9702968491
005b8917749affc41e567fcb0a94cef13d6
d48bc7fc2d43ba4aa371f004248bc2b040d
a2b1f74814f636ef8dbe9fa7940c0df8c17
fc021eff81e05fd415f0bfbf38301ff5c0d
f4746e5e0a8de491ae273a0ba53ad51d093
ef4f6cdf186dcb8e1c6346edbee1d807d52
d72dafccc5e5f238152321252602b492b6b
91bfd483f0b6ca1ed22d7beb4daad401002
d6815d7aa1a5e3aeae2b972fb05499f1564
7b2efc92077d09efd5ec6400c1825a3c537
110d9bf4a3a7eb0ecb1c69f72cf879c5a05
cf3979b3dfa1a0f9c606371c8680988c461
8fc047e4f5f820c05b980736863351a26e1
153e5c8a9b741bd7343a5baa04699dcd351
0760b5f460b41360812d9316db0beb0ccdd
02577d96f7c50787d25041f4dd3e84ea636
50ec8efc9d173ca59b615ff5bde749e7b75
8639179b4266c8effbec71c200ff5d3fa44
2237100458b8b43de10ffffff0c001eb0c
3d3f0cb2188e260040216f803feefffe211
03de10b3dc37f0ab319b6c407402c887590
e31aa0e965b7620ebb34f70abdaa251ecf0
0d51fea2e9cb7717f6557f35dab93f0542a
Message A [0:99]
b10034871493ead33e66ca7f0

K.11.6 Output of 10-bit symbol round-robin distribution of message B

Table K.41 contains the result of interleaving the output of the transcoder and distributing 10-bit symbols in round robin fashion to form message B, which is a 5 140-bit message (see 5.10.3).

Table K.41 - Message B

Message B [0:139]
160069dffc4fc3703070cd4f77bc8541000
00c0701c000461e088797747a97faeaaf22
9b0ea14866c3985e183046278a4048bcc90
312eff22cc0bebadb5c90cb8be85c30c501
db2c6b703da8f086c09dd83fc9e898c1cdb
1c5a8e36976eb184a06dc668a21971c980b
e208dcc73b15ab18821c484ba8c5f342f23
76211cf7428f5392f601672f4cf79a6a3c1
be122bddc02c876952265c51f9ebfb2241f
bfe1980be614f02cf7499c26571d0b8650b
07ce88254ea2eb80bf5baf60a056e100196
f09962a3e4c2d6b6eafbb6f1f96d5232de4
9ba5e53906f96d4f423f3b73e495c8d6383
48a661204482daa4178b28b00dce4459e44
f7116aad5c43c143b81663f4f688f026f6a
bd0b910ea198c4f90110ecd9017bc0bf6f9
be20785fef0c380f7d0037e7fb37801903a
b2de55f0e45b83be9ee64e4d27a9403912a
321c24eca55f2d20db5cc9e60cfb9ffffc7
6f87218a1d21ed84dbae43b85a9730d7917
9ff542f7ab85e28a000d68a18dc2bb608b4
7a2dc2044189e85525952120dd7e08a296d
e4c791b5a14f2f43f9198bdcb0ef2ad6f5d
43c0ca282549a7db6c61107ad41a5c17450
00ad7519a448e52354243871e54adcdbb1c
6bb81cba3a164cd080fcdd573a3797f8d18
665bed4d1a170ba34405cada7df5a019eb4
930f7924dc53c9d7b38f35a3f9b726097fb

Table K.41 - Message B

34b629218c46a3bf4c0fdc668b791606557
1a2c8630330ef2b17621f5935ca10ca1aba
4f76e2462b93708331256e9798041a79c2d
e9fc4fe88b1cae2b2c0e87430000160cc2c
0fc8b19ce77fc511875c61b3c9f7e102235
dfe24e1396e653f5ac188a19d0c79a859e1
48c1f8fcb30099bb2f3dfe154c1d49fbb46
f38c4a12b085773ba2b1072c0bf2f9df40a
Message B [0:99]
a79e1459c26a3de1711ef074f

K.11.7 Output of Reed-Solomon encoding for message A

Table K.42 contains the result of encoding Message A using a Reed-Solomon encoder (RS(544,514)) to form a 5 440-bit codeword (see 5.10.3).

Table K.42 - Message A

Message A [0:139]
91a3ee7c388007bf06affb904a23b8df070
003009e2003c1e77800f17b9e20245ef344
fcbbbbd8bccf2a0225b0e494779263daf0f
56fb0a2bedf5df0018bdf3d62ad6feeaf2b
2bcfabcb4a83dae4df633610d873ae03b2e
a96677ca5a7e37ea691b19c508113e52a6c
9b1f35a65547d0c21332ac3296a893fc38c
6b4d85a7046c737ee2cd3777ba318d3dd28
f658cc407ec225f3b31e2958f5218b2b232
dded489c3be3839fce4bc0098cb93300adf
321b25d82760d94e6927d9827948350e923
2c557bebd72a44783229414626b4d3b437f
dda404ad5bd521bf1164f9dda9702968491
005b8917749affc41e567fcb0a94cef13d6
d48bc7fc2d43ba4aa371f004248bc2b040d
a2b1f74814f636ef8dbe9fa7940c0df8c17
fc021eff81e05fd415f0bfbf38301ff5c0d
f4746e5e0a8de491ae273a0ba53ad51d093

Table K.42 - Message A (Continued)

ef4f6cdf186dcb8e1c6346edbee1d807d52
d72dafccc5e5f238152321252602b492b6b
91bfd483f0b6ca1ed22d7beb4daad401002
d6815d7aa1a5e3aeae2b972fb05499f1564
7b2efc92077d09efd5ec6400c1825a3c537
110d9bf4a3a7eb0ecb1c69f72cf879c5a05
cf3979b3dfa1a0f9c606371c8680988c461
8fc047e4f5f820c05b980736863351a26e1
153e5c8a9b741bd7343a5baa04699dcd351
0760b5f460b41360812d9316db0beb0ccdd
02577d96f7c50787d25041f4dd3e84ea636
50ec8efc9d173ca59b615ff5bde749e7b75
8639179b4266c8effbec71c200ff5d3fa44
2237100458b8b43de10ffffff0c001eb0c
3d3f0cb2188e260040216f803feefffe211
03de10b3dc37f0ab319b6c407402c887590
e31aa0e965b7620ebb34f70abdaa251ecf0
0d51fea2e9cb7717f6557f35dab93f0542a
Message A [0:99]
b10034871493ead33e66ca7f0
Parity[0:299]
e88c28d60d7b6863f34a606f24d8c8f9e354f60f1880b5e5fe4ac1bb8b0d1b0c100552412ed

K.11.8 Output of Reed-Solomon encoding for message B

Table K.43 contains the result of encoding Message B using a Reed-Solomon encoder (RS(544,514)) to form a 5 440-bit codeword (see 5.10.3).

Table K.43 - Message B

Message B [0:139]
160069dffc4fc3703070cd4f77bc8541000
00c0701c000461e088797747a97faeaaf22
9b0ea14866c3985e183046278a4048bcc90
312eff22cc0bebadb5c90cb8be85c30c501
db2c6b703da8f086c09dd83fc9e898c1cdb
1c5a8e36976eb184a06dc668a21971c980b
e208dcc73b15ab18821c484ba8c5f342f23
76211cf7428f5392f601672f4cf79a6a3c1
be122bddc02c876952265c51f9ebfb2241f
bfe1980be614f02cf7499c26571d0b8650b
07ce88254ea2eb80bf5baf60a056e100196
f09962a3e4c2d6b6eafbb6f1f96d5232de4
9ba5e53906f96d4f423f3b73e495c8d6383
48a661204482daa4178b28b00dce4459e44
f7116aad5c43c143b81663f4f688f026f6a
bd0b910ea198c4f90110ecd9017bc0bf6f9
be20785fef0c380f7d0037e7fb37801903a
b2de55f0e45b83be9ee64e4d27a9403912a
321c24eca55f2d20db5cc9e60cfb9ffffc7
6f87218a1d21ed84dbae43b85a9730d7917
9ff542f7ab85e28a000d68a18dc2bb608b4
7a2dc2044189e85525952120dd7e08a296d
e4c791b5a14f2f43f9198bdcb0ef2ad6f5d
43c0ca282549a7db6c61107ad41a5c17450
00ad7519a448e52354243871e54adcdbb1c
6bb81cba3a164cd080fcdd573a3797f8d18
665bed4d1a170ba34405cada7df5a019eb4
930f7924dc53c9d7b38f35a3f9b726097fb
34b629218c46a3bf4c0fdc668b791606557
1a2c8630330ef2b17621f5935ca10ca1aba

Table K.43 - Message B (Continued)

4f76e2462b93708331256e9798041a79c2d
e9fc4fe88b1cae2b2c0e87430000160cc2c
0fc8b19ce77fc511875c61b3c9f7e102235
dfe24e1396e653f5ac188a19d0c79a859e1
48c1f8fcb30099bb2f3dfe154c1d49fbb46
f38c4a12b085773ba2b1072c0bf2f9df40a
Message B [0:99]
a79e1459c26a3de1711ef074f
Parity[0:299]
c1ab63d5baf8349773a65be61bd65bccecf78b83b47afee89f667086fd63dffb43d610f19cf

K.11.9 Output of Bit Interleaving

Table K.44 contains the result of bit-interleaving Message A and Message B to form a 10 880-bit codeword (see 5.10.6.1).

Table K.44 - 10 880-bit codeword

Message [0:139]
831684057ce97bfaafe09055501f6faa052
46e55fadb91aa3a9d4d55c562b2ab001500
000055002a82a95400000ab01956bd2ac04
02ad7173f956bdc49155e98b9ecee5f1818
ebe585edcd8bb2c06d78f0af46c4225c096
14f00b834893a956e92043485e7d8f58255
2729adedaadd0c8df4f1aa67f9df8851479
2e5d3aa5aeb948edce236f55ea8d8b70447
59cfa8f56ccfb5851ae6c44afb44d434f2a
596a75b680baaf1c17e45c6d4500bd5a6de
89d2369c957ea59c936e3efc4f17d4986c8
129e75296b891888403432f567249c414da
d68e01d5a772d83e1b9b213be98a5248420
d07a498e0158ec968d892eb0fbaa45f485a
3d9e28534272dd3f201868f5370f97acfd1
c50531e3f2dbf65d85f1bc2d91ee6aba442
ef7c234858e57152b554a458443b7d4b9b0
d097c19d23342ff635c4beacf0c8e1407ae

Table K.44 - 10 880-bit codeword (Continued)

e7f7fc5392c082eaad6da91ada0549faf5b
e30c7e150086962b58bd3058f40149651df
0a1d51ed8462a69224bd6c04f9cb90a86dd
b269fe6d798049d823198ad1300a883862d
5da063933d8eec8ff935588c72389f945e4
caecb65167a16ae699e72730d8f2457bd75
e3e7cc32a8318de3116df7631ca365ff120
91ebaafc7bb5bec926b12a4c179942ac10b
1040696d688306253530c28cf7ddd83003b
e919e2eeaea4500d9d2787074bb435d7134
f7358247786eeef226f1300fd546308dcd4
51729be055a30ae34c0c5fa048e147a28d9
cd59858bd72b20d88912eb685534feeb80a
34754d6fad697412115eaa051efd5b8ab97
eff408042be8bbffe8aba8502bd55175177
355008fbfdd7fafc50f1a8155ab63a00ad9
ef2477b836b977a4a86491e7e41acb56c9f
cac3d1adc10e74c374ec6711107e302498d
adae22f51cb0f6f5896239f7a8e748a853e
a36a57069fc7945f8fd4bd3ea557ffbb12e
b67f447b4cabe0e852b3ac23fda68590536 b8cad18074e91266c411e4f10d31dc7166f
c357df777124d51fdd8aca39f84c81eca20
404f33ecaec4790f3d88cdb9a1402408a24
b76c88a3b1a62a946403c863fc8566b98cb
68667862b0c55e751377841c1ee06633cb2
7e9a547ed7a1c71688173af708eb74aff76
356d2686552a0da02d45e19cc5bb47b27b7
12075051e1ceae604c27986bec6fa2edb4d
529522982bf9da6b0abc837e1a137942211
a0aa4de33f938b47d9759842dc225d87b13
408340f6a1b52e8399048e3e0d1e56a16a1
94efea80127aed685f99ab9414a0f200628
5ebe0517b173e4a6c0f1f932bdd48765681
163617deb9f190d643cd2b3501cfd92f1a3

Table K.44 - 10 880-bit codeword (Continued)

0056672ced6cc2a717d93c951a1e35d9b21
412f24aa6f63ae30b6a09b255187b615c50
b84fb871b491efbcb459f5c6d00e1bafbdb
05186b3d1de38626d5b5b036481fca7fb25
411aa7152bd38d1e71fe64238a89c36273e
2344acf0c0bcafa04b5b027e5f58ce23979
d1c0377bbe71b67f2ec2710e1ec2bcd9f99
907d1f69a92e929d188e692dba40d4afaf8
75c723e56e22e8240aab513d91febd418b2
5c495fb52155546091ca8bd0cdb80de7ac5
100fdeabfb55f55aa00a0022802f8d508f0
0af755d58aa1cb54a96a95fd54360201601
a26a13cabca0aa5ebfdbefd57aaac0c0b23
515ff95c21548b0fd3785e3eb70aee9b4e5
143c568e42282b720501ed2c8c03b63e902
b84a5146ee40fdd19e1b8a2a66868aed8ed
f0fb2ff7e026665f289d6249357edea7528
55a761a175ec890cde41e09b3f3f0b6fee2
c9b132abf0db151cddf89afd751773004cc
ce1742a807309167a118964eaee6f90b1fa
Message[0:59]
616bcf5883f75aa
Parity[0:139]
f881c8da2c85f3368ad97fca2e60961fbf0
f986c39457c7d0665f39872cafad2fca5bb
35ea6e805f47909a88ef76fc61d7fe349cb
a01c59ed5d7285b53df5ada210551391304
Parity[0:39]
750346f4fb

K.12 Single lane 128GFC using Single Reed-Solomon (RS(544,514)) and Bit Interleaving – Alignment Marker and Idle Pattern

K.12.1 Overview

This annex provides an example transmitted bit stream produced by 64B66B to 256B/257B transcoding (see 5.5.2), alignment marker mapping and insertion (see 5.5.3), Reed-Solomon encoding (see 5.10.4), and Bit Interleaving (see 5.10.6.2). Results of each computation are provided in a tabular form. The contents of the tables are transmitted from left to right within each row starting from the top row and ending at the bottom row. The tables contain both binary and hexadecimal representations of the data. For the hexadecimal representation, the most significant bit of each hex symbol is transmitted first.

K.12.2 Input to the 64B/66B scrambler

Table K.45 contains the sequence of 80 66-bit blocks corresponding to the PCS transmission of Idle control characters.

Table K.45 - Idle input to scrambler

Sync [0:1]	64-bit payload, Hex [2:65]	Sync [0:1]	64-bit payload, Hex [2:65]	Sync [0:1]	64-bit payload, Hex [2:65]	Sync [0:1]	64-bit payload, Hex [2:65]
10	78000000_00000000	10	78000000_00000000	10	78000000_00000000	10	78000000_00000000
10	78000000_00000000	10	78000000_00000000	10	78000000_00000000	10	78000000_00000000
10	78000000_00000000	10	78000000_00000000	10	78000000_00000000	10	78000000_00000000
10	78000000_00000000	10	78000000_00000000	10	78000000_00000000	10	78000000_00000000
10	78000000_00000000	10	78000000_00000000	10	78000000_00000000	10	78000000_00000000
10	78000000_00000000	10	78000000_00000000	10	78000000_00000000	10	78000000_00000000
10	78000000_00000000	10	78000000_00000000	10	78000000_00000000	10	78000000_00000000
10	78000000_00000000	10	78000000_00000000	10	78000000_00000000	10	78000000_00000000
10	78000000_00000000	10	78000000_00000000	10	78000000_00000000	10	78000000_00000000
10	78000000_00000000	10	78000000_00000000	10	78000000_00000000	10	78000000_00000000
10	78000000_00000000	10	78000000_00000000	10	78000000_00000000	10	78000000_00000000
10	78000000_00000000	10	78000000_00000000	10	78000000_00000000	10	78000000_00000000
10	78000000_00000000	10	78000000_00000000	10	78000000_00000000	10	78000000_00000000
10	78000000_00000000	10	78000000_00000000	10	78000000_00000000	10	78000000_00000000
10	78000000_00000000	10	78000000_00000000	10	78000000_00000000	10	78000000_00000000
10	78000000_00000000	10	78000000_00000000	10	78000000_00000000	10	78000000_00000000
10	78000000_00000000	10	78000000_00000000	10	78000000_00000000	10	78000000_00000000
10	78000000_00000000	10	78000000_00000000	10	78000000_00000000	10	78000000_00000000
10	78000000_00000000	10	78000000_00000000	10	78000000_00000000	10	78000000_00000000
10	78000000_00000000	10	78000000_00000000	10	78000000_00000000	10	78000000_00000000

K.12.3 Output of scrambler/Input to the 64B/66B to 256B/257B transcoder

Table K.46 contains the sequence of 80 66-bit blocks corresponding to the scrambled PCS transmission of Idle control characters that are scrambled and are input to the 256B/257B transcoder. The initial value of the scrambler was set to 0x0.

Table K.46 - Output of scrambler

Sync [0:1]	64-bit payload, Hext [2:65]	Sync [0:1]	64-bit payload, Hext [2:65]	Sync [0:1]	64-bit payload, Hext [2:65]	Sync [0:1]	64-bit payload, Hext [2:65]
10	7800000000f0001e	10	7801e00000f0045e	10	7879e00880f1e45e	10	7779e1e88097e45e
10	777955e89917e536	10	776755ec29178336	10	7987540c2913c336	10	0187248c28f3c3c9
10	0198c48daef3c3c9	10	056cc4ec2efa2bc8	10	fb6ccf5c2f7c2ba0	10	1b6d2f5c9f3c3258
10	1a75af437f387d58	10	6395a0257ed87d58	10	d795b9a507b07d46	10	d76109bb61b193a6
10	d6810dff21c9ebae	10	2600ec1f2e36ea51	10	c6676a1f2e365aa5	10	df86eb7ec629a4a1
10	64368cf8c8a14540	10	84327cb8a95934d8	10	05cd9c43e646ad39	10	8cab9da3e2b21958
10	15220cca1cac121c	10	a4ba6aa3124df3fc	10	10be33236b5d8362	10	115a73dc13426c63
10	96ba73dc17b66c02	10	6eb39bdde94667ac	10	6f347bb5094783ec	10	df0c6245885ee3f3
10	30082ca5f1d8ec95	10	31e898a55c58f47d	10	489e98bfecac2263	10	207f77bfed486627
10	18077f371c298738	10	17e79ec97a4e0138	10	13132e5ce3a66858	10	050cdbe859900fb6
10	eb85da0909d4e60e	10	8b652b8e682f49f5	10	bd9abd09e0a94815	10	0d6e10e80048d962
10	f384abb2d7d151eb	10	fc854e1623ad7063	10	7514df682db63163	10	ed6cb669aa568197
10	f0793769ba409792	10	b5395b41b54f961b	10	b53c4f41648ffe73	10	b5dacfa5c4942972
10	453ac123c1802913	10	713348a246e8224d	10	705ff8d520e82cad	10	c5bfe511618054bb
10	353a44f1167f5a44	10	d4bdc2f1167feab0	10	b55c4390fe9014aa	10	0eedc416f018f10b
10	ee91345e11e16093	10	606ed5455e98f972	10	e90860a543ec4c7b	10	709ff1c80df2213f
10	cfe79641031780df	10	03e3bf417be7f0be	10	02181fbf85f81fbf	10	810c1fde0105f7df
10	8705fc6ffe73fc19	10	6683fc07ae3201a1	10	d7a365e8cf2f2ebe	10	4147246eb74921d8
10	f4a789ee63a1392e	10	8d2539eab55401d0	10	e424d2aef4c83d9c	10	2cdd3bc60a56dd7c
10	c35a5c386c31eb88	10	de4f6dcc1dc67cec	10	73e0fffea978fae3	10	7d6d0e5f98c462c3

K.12.4 Output of 256B/257B transcoder with Alignment Marker insertion

Table K.47 contains the result of alignment marker insertion into the 64B/66B to 256B/257B transcoded bit stream. The italicized values appearing in the first row of the table denote the 257 bits (including the pad value of 0 in bit position [256]) of the Alignment Marker described in 5.5.3. In this example, the Remote Degrade (RD) field is set to 0.

Table K.47 - Output of 256B/257B transcoder with Alignment Marker

Header [0:4]	Payload, hex [5:64]	Payload, hex [65:128]	Payload, hex [129:192]	Payload, hex [193:256]
10010	*30b00247dcfceff*	*e0710027e1b8f7e0*	*8183855ff766a7ba*	*09443de42f71be20*
10000	700000000f0001e	7801e00000f0045e	7879e00880f1e45e	7779e1e88097e45e
10111	77955e89917e536	776755ec29178336	7987540c2913c336	0187248c28f3c3c9
01001	098c48daef3c3c9	056cc4ec2efa2bc8	fb6ccf5c2f7c2ba0	1b6d2f5c9f3c3258
10111	175af437f387d58	6395a0257ed87d58	d795b9a507b07d46	d76109bb61b193a6
11000	d810dff21c9ebae	2600ec1f2e36ea51	c6676a1f2e365aa5	df86eb7ec629a4a1
00011	6368cf8c8a14540	84327cb8a95934d8	05cd9c43e646ad39	8cab9da3e2b21958
10010	1220cca1cac121c	a4ba6aa3124df3fc	10be33236b5d8362	115a73dc13426c63
11011	9ba73dc17b66c02	6eb39bdde94667ac	6f347bb5094783ec	df0c6245885ee3f3
10000	3082ca5f1d8ec95	31e898a55c58f47d	489e98bfecac2263	207f77bfed486627
10000	1077f371c298738	17e79ec97a4e0138	13132e5ce3a66858	050cdbe859900fb6
01000	e85da0909d4e60e	8b652b8e682f49f5	bd9abd09e0a94815	0d6e10e80048d962
11000	f84abb2d7d151eb	fc854e1623ad7063	7514df682db63163	ed6cb669aa568197
10111	f793769ba409792	b5395b41b54f961b	b53c4f41648ffe73	b5dacfa5c4942972
00011	43ac123c1802913	713348a246e8224d	705ff8d520e82cad	c5bfe511618054bb
10011	33a44f1167f5a44	d4bdc2f1167feab0	b55c4390fe9014aa	0eedc416f018f10b
01001	e91345e11e16093	606ed5455e98f972	e90860a543ec4c7b	709ff1c80df2213f
01110	ce79641031780df	03e3bf417be7f0be	02181fbf85f81fbf	810c1fde0105f7df
00000	805fc6ffe73fc19	6683fc07ae3201a1	d7a365e8cf2f2ebe	4147246eb74921d8
11010	fa789ee63a1392e	8d2539eab55401d0	e424d2aef4c83d9c	2cdd3bc60a56dd7c

K.12.5 Output of Reed-Solomon encoding

Table K.48 contains the result of encoding using a Reed-Solomon encoder (RS(544,514)) (see 5.10.4) to form a 5 440-bit codeword.

Table K.48 - RS(544,514) codeword output

Payload [0:139]
918580123ee7e77ff0388013f0dc7bf040c
1c2affbb353dd04a21ef217b8df1041c000
00003c00079e007800003c01179e1e78022
03c79179dde787a2025f917aeef2abd1322
fca6ceeceabd8522f066cf30ea818522786
6c030e491851e787929098c48daef3c3c90
56cc4ec2efa2bc8fb6ccf5c2f7c2ba01b6d
2f5c9f3c3258b8bad7a1bf9c3eac31cad01
2bf6c3eac6bcadcd283d83ea36bb084ddb0
d8c9d36360437fc8727aeb89803b07cb8db
a947199da87cb8d96a977e1badfb18a6928
46c6d19f191428a810864f97152b269b00b
9b3887cc8d5a7319573b47c56432b121220
cca1cac121ca4ba6aa3124df3fc10be3323
6b5d8362115a73dc13426c63dcdd39ee0bd
b36013759cdeef4a333d6379a3dda84a3c1
f66f863122c42f71f9c0c20b297c763b254
c7a262957163d1f5227a62ffb2b0898c81f
ddeffb521989e020efe6e38530e702fcf3d
92f49c027026265cb9c74cd0b00a19b7d0b
3201f6c8e85da0909d4e60e8b652b8e682f
49f5bd9abd09e0a948150d6e10e80048d96
2c7c255d96be8a8f5fe42a70b11d6b831ba
8a6fb416db18b1f6b65b34d52b40cbdfde4
dda6e9025e4ad4e56d06d53e586ed4f13d0
5923ff9ced76b3e971250a5c86875824783
005226e26691448dd0449ae0bff1aa41d05
95b8b7fca22c300a977333a44f1167f5a44
d4bdc2f1167feab0b55c4390fe9014aa0ee
dc416f018f10b4f489a2f08f0b049b0376a

Table K.48 - RS(544,514) codeword output (Continued)

a2af4c7cb974843052a1f6263db84ff8e40
6f9109fbb39e59040c5e037c0f8efd05ef9
fc2f808607efe17e07efe04307f780417df
7c100bf8dffce7f832cd07f80f5c640343a
f46cbd19e5e5d7c828e48dd6e9243b1afa7
89ee63a1392e8d2539eab55401d0e424d2a
Payload [0:99]
ef4c83d9c2cdd3bc60a56dd7c
Parity [0:299]
80c90955ab1699b87fdb136e5005f908e3d06d99c791ca29875217147354e8f32ed41ec6e0a

K.12.6 Output of Bit Interleaving

Table K.49 contains the result of Bit Interleaving (see 5.10.6.2)

Table K.49 - 5440-bit codeword

Message [0:139]
831684057ce97bfaafe09055501f6faa052
46e55fadb91aa3a9d4d55c562b2ab002a00
00005a001582a95800000ab016a97e2ac04
015eb173f9a97ec49155d6476ecee5f2424
ebe58adece8bb2c09eb4f0af49c8115c096
28f00b83486356a6e9208384ae7d8fa41aa
2729aede55dd0c8ef8f2aa67f6ef4451479
1dae3aa5ae7684ddce239faada8d8bb088b
59cfa4fa9ccfb58a25d9c44af788e834f2a
a695b5b680755f2c17e4ac9e8500bda59ed
89d2396c6a7ea59c639d3efc4f2be8986c8
216db5296b462448403431fa97249c828e5
d68e02ea5b72d83d2767213be645a148420
e0b5898e01a4dc668d891d70fbaa45f84a5
3d9e24a38172dd3f102468f53b0f6bacfd1
ca0a31e3f2e7f9ad85f17c1e61ee6a75881
ef7c2384a4e571517aa8a4584837be4b9b0
e06bc19d23381ff635c47d5cf0c8e180b5d
e7f7fca361c082e55e9ea91ad50a86faf5b

Table K.49 - 5440-bit codeword

d30cbe150049691b58bd30a4f401499a2ef
0a1d52de4862a691187e6c04f6c760a86dd
7196fe6d794086e8231945e2300a883491e
5da063633e8eec8ff63a588c71346f945e4
c5dc7651675295d699e71b30e8f245b7eba
e3e7cc3154318de3229ef7631c539aff120
62d75afc7b7a7dc926b1158c2799425c207
1040669e9483062a3a30c28cfbeee43003b
d626d2eeae58a00d9d274b0b8bb435eb238
f735818bb46eeef119f2300fda89308dcd4
a2b16be0555305d34c0caf5088e147514e6
cd598a47eb2b20d44621eb685a38fdeb80a
38ba8d6fad96b822115e550a2efd5b4576b
eff4040817e8bbffd457a85027eaa275177
3aa008fbfdebf5fc50f1542aaab63a005e6
ef247b7439b977a8549891e7e825c756c9f
c5c3e1adc10db8c374ec9b22207e301864e
Message [0:99]
adae21fa2cb0f6fa469139f7a
Parity[0:299]
77874661770063f340c1356f92430999ee0db264bb39923230256e45419b84adc1f2533e2da

K.13 Single lane 128GFC using Single Reed-Solomon (RS(544,514)) and Symbol Forwarding – Alignment Marker and Idle Pattern

K.13.1 Overview

This annex provides an example transmitted bit stream produced by 64B66B to 256B/257B transcoding (see 5.5.2), alignment marker mapping and insertion (see 5.5.3), Reed-Solomon encoding (see 5.10.4), and Symbol Forwarding (see 5.10.5.2). Results of each computation are provided in a tabular form. The contents of the tables are transmitted from left to right within each row starting from the top row and ending at the bottom row. The tables contain both binary and hexadecimal representations of the data. For the hexadecimal representation, the most significant bit of each hex symbol is transmitted first.

K.13.2 Input to the 64B/66B scrambler

Table K.50 contains the sequence of 80 66-bit blocks corresponding to the PCS transmission of Idle control characters.

Table K.50 - Idle input to scrambler

Sync [0:1]	64-bit payload, Hex [2:65]	Sync [0:1]	64-bit payload, Hex [2:65]	Sync [0:1]	64-bit payload, Hex [2:65]	Sync [0:1]	64-bit payload, Hex [2:65]
10	78000000_00000000	10	78000000_00000000	10	78000000_00000000	10	78000000_00000000
10	78000000_00000000	10	78000000_00000000	10	78000000_00000000	10	78000000_00000000
10	78000000_00000000	10	78000000_00000000	10	78000000_00000000	10	78000000_00000000
10	78000000_00000000	10	78000000_00000000	10	78000000_00000000	10	78000000_00000000
10	78000000_00000000	10	78000000_00000000	10	78000000_00000000	10	78000000_00000000
10	78000000_00000000	10	78000000_00000000	10	78000000_00000000	10	78000000_00000000
10	78000000_00000000	10	78000000_00000000	10	78000000_00000000	10	78000000_00000000
10	78000000_00000000	10	78000000_00000000	10	78000000_00000000	10	78000000_00000000
10	78000000_00000000	10	78000000_00000000	10	78000000_00000000	10	78000000_00000000
10	78000000_00000000	10	78000000_00000000	10	78000000_00000000	10	78000000_00000000
10	78000000_00000000	10	78000000_00000000	10	78000000_00000000	10	78000000_00000000
10	78000000_00000000	10	78000000_00000000	10	78000000_00000000	10	78000000_00000000
10	78000000_00000000	10	78000000_00000000	10	78000000_00000000	10	78000000_00000000
10	78000000_00000000	10	78000000_00000000	10	78000000_00000000	10	78000000_00000000
10	78000000_00000000	10	78000000_00000000	10	78000000_00000000	10	78000000_00000000
10	78000000_00000000	10	78000000_00000000	10	78000000_00000000	10	78000000_00000000
10	78000000_00000000	10	78000000_00000000	10	78000000_00000000	10	78000000_00000000
10	78000000_00000000	10	78000000_00000000	10	78000000_00000000	10	78000000_00000000
10	78000000_00000000	10	78000000_00000000	10	78000000_00000000	10	78000000_00000000
10	78000000_00000000	10	78000000_00000000	10	78000000_00000000	10	78000000_00000000

K.13.3 Output of scrambler/Input to the 64B/66B to 256B/257B transcoder

Table K.51 contains the sequence of 80 66-bit blocks corresponding to the scrambled PCS transmission of Idle control characters that are scrambled and are input to the 256B/257B transcoder. The initial value of the scrambler was set to 0x0.

Table K.51 - Output of scrambler

Sync [0:1]	64-bit payload, Hext [2:65]	Sync [0:1]	64-bit payload, Hext [2:65]	Sync [0:1]	64-bit payload, Hext [2:65]	Sync [0:1]	64-bit payload, Hext [2:65]
10	7800000000f0001e	10	7801e00000f0045e	10	7879e00880f1e45e	10	7779e1e88097e45e
10	777955e89917e536	10	776755ec29178336	10	7987540c2913c336	10	0187248c28f3c3c9
10	0198c48daef3c3c9	10	056cc4ec2efa2bc8	10	fb6ccf5c2f7c2ba0	10	1b6d2f5c9f3c3258
10	1a75af437f387d58	10	6395a0257ed87d58	10	d795b9a507b07d46	10	d76109bb61b193a6
10	d6810dff21c9ebae	10	2600ec1f2e36ea51	10	c6676a1f2e365aa5	10	df86eb7ec629a4a1
10	64368cf8c8a14540	10	84327cb8a95934d8	10	05cd9c43e646ad39	10	8cab9da3e2b21958
10	15220cca1cac121c	10	a4ba6aa3124df3fc	10	10be33236b5d8362	10	115a73dc13426c63
10	96ba73dc17b66c02	10	6eb39bdde94667ac	10	6f347bb5094783ec	10	df0c6245885ee3f3
10	30082ca5f1d8ec95	10	31e898a55c58f47d	10	489e98bfecac2263	10	207f77bfed486627
10	18077f371c298738	10	17e79ec97a4e0138	10	13132e5ce3a66858	10	050cdbe859900fb6
10	eb85da0909d4e60e	10	8b652b8e682f49f5	10	bd9abd09e0a94815	10	0d6e10e80048d962
10	f384abb2d7d151eb	10	fc854e1623ad7063	10	7514df682db63163	10	ed6cb669aa568197
10	f0793769ba409792	10	b5395b41b54f961b	10	b53c4f41648ffe73	10	b5dacfa5c4942972
10	453ac123c1802913	10	713348a246e8224d	10	705ff8d520e82cad	10	c5bfe511618054bb
10	353a44f1167f5a44	10	d4bdc2f1167feab0	10	b55c4390fe9014aa	10	0eedc416f018f10b
10	ee91345e11e16093	10	606ed5455e98f972	10	e90860a543ec4c7b	10	709ff1c80df2213f
10	cfe79641031780df	10	03e3bf417be7f0be	10	02181fbf85f81fbf	10	810c1fde0105f7df
10	8705fc6ffe73fc19	10	6683fc07ae3201a1	10	d7a365e8cf2f2ebe	10	4147246eb74921d8
10	f4a789ee63a1392e	10	8d2539eab55401d0	10	e424d2aef4c83d9c	10	2cdd3bc60a56dd7c
10	c35a5c386c31eb88	10	de4f6dcc1dc67cec	10	73e0fffea978fae3	10	7d6d0e5f98c462c3

K.13.4 Output of 256B/257B transcoder with Alignment Marker insertion

Table K.52 contains the result of alignment marker insertion into the 64B/66B to 256B/257B transcoded bit stream. The italicized values appearing in the first row of the table denote the 257 bits (including the pad value of 0 in bit position [256]) of the Alignment Marker described in 5.5.3. In this example, the Remote Degrade (RD) field is set to 0.

Table K.52 - Output of 256B/257B transcoder with Alignment Marker

Header [0:4]	Payload, hex [5:64]	Payload, hex [65:128]	Payload, hex [129:192]	Payload, hex [193:256]
10000	*62d080af9d2f7f5*	*5fc120aaa03edf54*	*0a48dcabf5b72354*	*753a9aab8ac56554*
10000	700000000f0001e	7801e00000f0045e	7879e00880f1e45e	7779e1e88097e45e
10111	77955e89917e536	776755ec29178336	7987540c2913c336	0187248c28f3c3c9
01001	098c48daef3c3c9	056cc4ec2efa2bc8	fb6ccf5c2f7c2ba0	1b6d2f5c9f3c3258
10111	175af437f387d58	6395a0257ed87d58	d795b9a507b07d46	d76109bb61b193a6
11000	d810dff21c9ebae	2600ec1f2e36ea51	c6676a1f2e365aa5	df86eb7ec629a4a1
00011	6368cf8c8a14540	84327cb8a95934d8	05cd9c43e646ad39	8cab9da3e2b21958
10010	1220cca1cac121c	a4ba6aa3124df3fc	10be33236b5d8362	115a73dc13426c63
11011	9ba73dc17b66c02	6eb39bdde94667ac	6f347bb5094783ec	df0c6245885ee3f3
10000	3082ca5f1d8ec95	31e898a55c58f47d	489e98bfecac2263	207f77bfed486627
10000	1077f371c298738	17e79ec97a4e0138	13132e5ce3a66858	050cdbe859900fb6
01000	e85da0909d4e60e	8b652b8e682f49f5	bd9abd09e0a94815	0d6e10e80048d962
11000	f84abb2d7d151eb	fc854e1623ad7063	7514df682db63163	ed6cb669aa568197
10111	f793769ba409792	b5395b41b54f961b	b53c4f41648ffe73	b5dacfa5c4942972
00011	43ac123c1802913	713348a246e8224d	705ff8d520e82cad	c5bfe511618054bb
10011	33a44f1167f5a44	d4bdc2f1167feab0	b55c4390fe9014aa	0eedc416f018f10b
01001	e91345e11e16093	606ed5455e98f972	e90860a543ec4c7b	709ff1c80df2213f
01110	ce79641031780df	03e3bf417be7f0be	02181fbf85f81fbf	810c1fde0105f7df
00000	805fc6ffe73fc19	6683fc07ae3201a1	d7a365e8cf2f2ebe	4147246eb74921d8
11010	fa789ee63a1392e	8d2539eab55401d0	e424d2aef4c83d9c	2cdd3bc60a56dd7c

K.13.5 L.13.5 Output of Reed-Solomon encoding

Table K.53 contains the result of encoding using a Reed-Solomon encoder (RS(544,514)) (see 5.10.4) to form a 5 440-bit codeword.

Table K.53 - RS(544,514) codeword output

Payload [0:139]
831684057ce97bfaafe09055501f6faa052
46e55fadb91aa3a9d4d55c562b2aa41c000
00003c00079e007800003c01179e1e78022
03c79179dde787a2025f917aeef2abd1322
fca6ceeceabd8522f066cf30ea818522786
6c030e491851e787929098c48daef3c3c90
56cc4ec2efa2bc8fb6ccf5c2f7c2ba01b6d
2f5c9f3c3258b8bad7a1bf9c3eac31cad01
2bf6c3eac6bcadcd283d83ea36bb084ddb0
d8c9d36360437fc8727aeb89803b07cb8db
a947199da87cb8d96a977e1badfb18a6928
46c6d19f191428a810864f97152b269b00b
9b3887cc8d5a7319573b47c56432b121220
cca1cac121ca4ba6aa3124df3fc10be3323
6b5d8362115a73dc13426c63dcdd39ee0bd
b36013759cdeef4a333d6379a3dda84a3c1
f66f863122c42f71f9c0c20b297c763b254
c7a262957163d1f5227a62ffb2b0898c81f
ddeffb521989e020efe6e38530e702fcf3d
92f49c027026265cb9c74cd0b00a19b7d0b
3201f6c8e85da0909d4e60e8b652b8e682f
49f5bd9abd09e0a948150d6e10e80048d96
2c7c255d96be8a8f5fe42a70b11d6b831ba
8a6fb416db18b1f6b65b34d52b40cbdfde4
dda6e9025e4ad4e56d06d53e586ed4f13d0
5923ff9ced76b3e971250a5c86875824783
005226e26691448dd0449ae0bff1aa41d05
95b8b7fca22c300a977333a44f1167f5a44
d4bdc2f1167feab0b55c4390fe9014aa0ee
dc416f018f10b4f489a2f08f0b049b0376a

Table K.53 - RS(544,514) codeword output (Continued)

a2af4c7cb974843052a1f6263db84ff8e40
6f9109fbb39e59040c5e037c0f8efd05ef9
fc2f808607efe17e07efe04307f780417df
7c100bf8dffce7f832cd07f80f5c640343a
f46cbd19e5e5d7c828e48dd6e9243b1afa7
89ee63a1392e8d2539eab55401d0e424d2a
Payload [0:99]
ef4c83d9c2cdd3bc60a56dd7c
Parity [0:299]
fc2c6af209bc5e3ff657d992ee9da9df6fa9f96e8841dee0babedeb479c3e095e0f26505947

K.13.6 Output of Symbol Forwarding

Table K.54 contains the result of Symbol Forwarding (see 5.10.5.2)

Table K.54 - 5440-bit codeword

Payload [0:139]
831684057ce97bfaafe09055501f6faa052
46e55fadb91aa3a9d4d55c562b2aa41c000
00003c00079e007800003c01179e1e78022
03c79179dde787a2025f917aeef2abd1322
fca6ceeceabd8522f066cf30ea818522786
6c030e491851e787929098c48daef3c3c90
56cc4ec2efa2bc8fb6ccf5c2f7c2ba01b6d
2f5c9f3c3258b8bad7a1bf9c3eac31cad01
2bf6c3eac6bcadcd283d83ea36bb084ddb0
d8c9d36360437fc8727aeb89803b07cb8db
a947199da87cb8d96a977e1badfb18a6928
46c6d19f191428a810864f97152b269b00b
9b3887cc8d5a7319573b47c56432b121220
cca1cac121ca4ba6aa3124df3fc10be3323
6b5d8362115a73dc13426c63dcdd39ee0bd
b36013759cdeef4a333d6379a3dda84a3c1
f66f863122c42f71f9c0c20b297c763b254
c7a262957163d1f5227a62ffb2b0898c81f
ddeffb521989e020efe6e38530e702fcf3d

Table K.54 - 5440-bit codeword (Continued)

92f49c027026265cb9c74cd0b00a19b7d0b
3201f6c8e85da0909d4e60e8b652b8e682f
49f5bd9abd09e0a948150d6e10e80048d96
2c7c255d96be8a8f5fe42a70b11d6b831ba
8a6fb416db18b1f6b65b34d52b40cbdfde4
dda6e9025e4ad4e56d06d53e586ed4f13d0
5923ff9ced76b3e971250a5c86875824783
005226e26691448dd0449ae0bff1aa41d05
95b8b7fca22c300a977333a44f1167f5a44
d4bdc2f1167feab0b55c4390fe9014aa0ee
dc416f018f10b4f489a2f08f0b049b0376a
a2af4c7cb974843052a1f6263db84ff8e40
6f9109fbb39e59040c5e037c0f8efd05ef9
fc2f808607efe17e07efe04307f780417df
7c100bf8dffce7f832cd07f80f5c640343a
f46cbd19e5e5d7c828e48dd6e9243b1afa7
89ee63a1392e8d2539eab55401d0e424d2a
Payload [0:99]
ef4c83d9c2cdd3bc60a56dd7c
Parity [0:299]
fc2c6af209bc5e3ff657d992ee9da9df6fa9f96e8841dee0babedeb479c3e095e0f26505947

Annex L
(Informative)
Congestion Signal Examples

L.1 Overview

This informative annex includes examples of Congestion Signals (see clause 25) as they relate to transmitter resource consumption.

L.2 Resource Consumption

The methods used to measure transmitter resource consumption and to establish the associated thresholds for determining Congestion Signal generation are device dependent and outside the scope of the standard.

L.3 Congestion Signal Generation

A Congestion Signal is generated when transmitter resource consumption is determined to be above a threshold. Subsequent Congestion Signals are generated at a specified frequency as defined in the ECD ELS exchange (see FC-LS-5) while the consumption is above a threshold. When the consumption falls below a threshold, the Congestion Signal generation ceases.

A Warning Congestion Signal is always transmitted on the initial transition above a threshold followed by either Warning or Alarm Congestion Signals at the specified frequency while the transmitter resources are consumed above a threshold.

L.4 Congestion Signal Examples

L.4.1 Overview

The examples below demonstrate Congestion Signal generation based on resource consumption. The first example (see L.4.2) demonstrates how Congestion Signals are generated when resource consumption is measured to have exceeded the thresholds established by the implementation. The second example (see L.4.3) demonstrates how a congestion measurement method could be used to measure resource consumption and produce the resulting Congestion Signal generation.

L.4.2 Congestion Signal Generation

The graphs in figure L.1 and figure L.2 describe an example of the consumption of transmitter resources over time. That graph is a pictorial description of transmitter resource consumption used to model Congestion Signal generation.

The x-axis is time, the y-axis is transmitter resources, and the line is the detected resource consumption over time as measured by an implementation (E.g., a point on the line is the result of the transmitter's method of resource consumption measurement). The dotted horizontal lines represent the relative Warning and Alarm thresholds as compared to transmitter resource consumption. The dotted vertical lines represent the Signal Frequency intervals and are labeled with the corresponding Signal generation value.

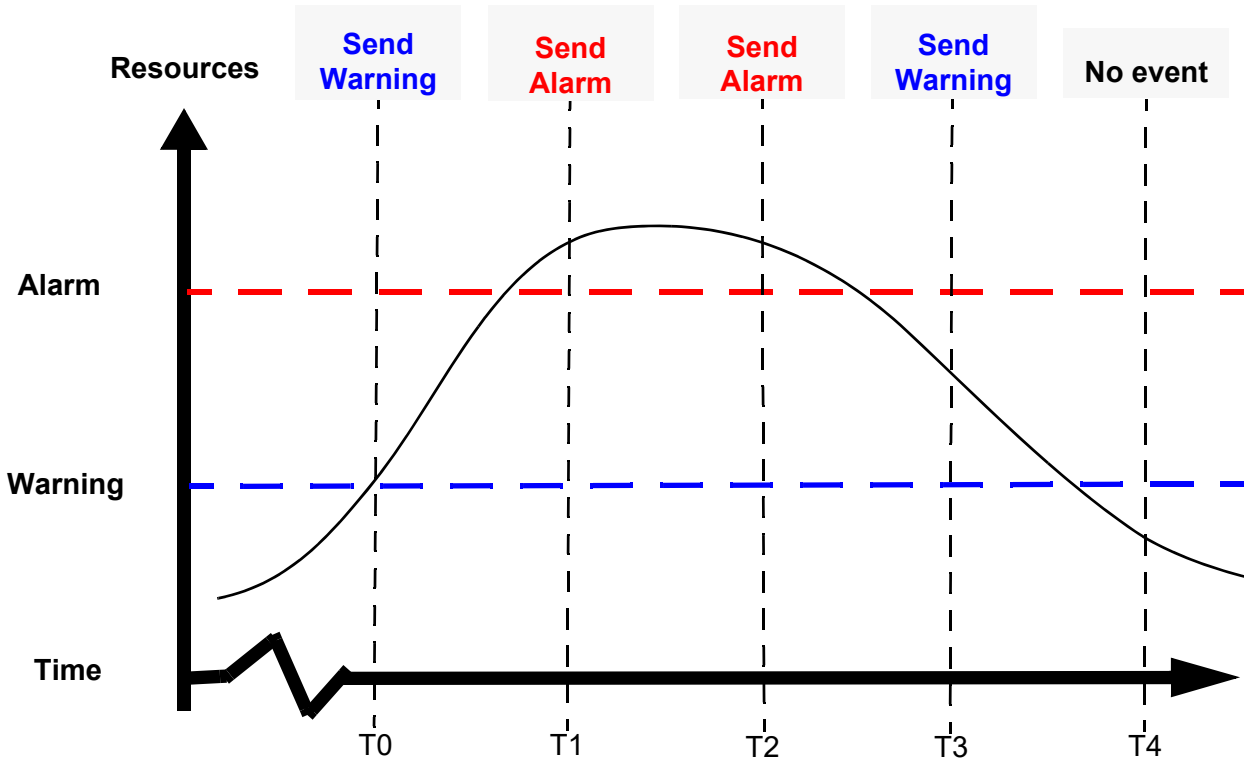

Figure L.1 - Example of Congestion Signal Generation

Signal generation is depicted as follows:

T0 – Congestion Signal generation starts: When the transmitter resource consumption exceeds the Warning threshold then the transmitter sends the Warning Congestion Signal.

T1 to T2 – Alarm threshold persists: While the transmitter resource consumption is above the Alarm threshold then the transmitter sends the Alarm Congestion Signal at the Signal Frequency intervals.

T3 – Declining resource consumption: When the next Signal Frequency interval occurs and the transmitter resource consumptions is below the Alarm threshold and is above the Warning threshold then the transmitter sends the Warning Congestion Signal.

T4 – Congestion Signal generations ends: When the next Signal Frequency interval occurs and the transmitter resource consumption is below the Warning threshold then the transmitter stops sending any Congestion Signals.

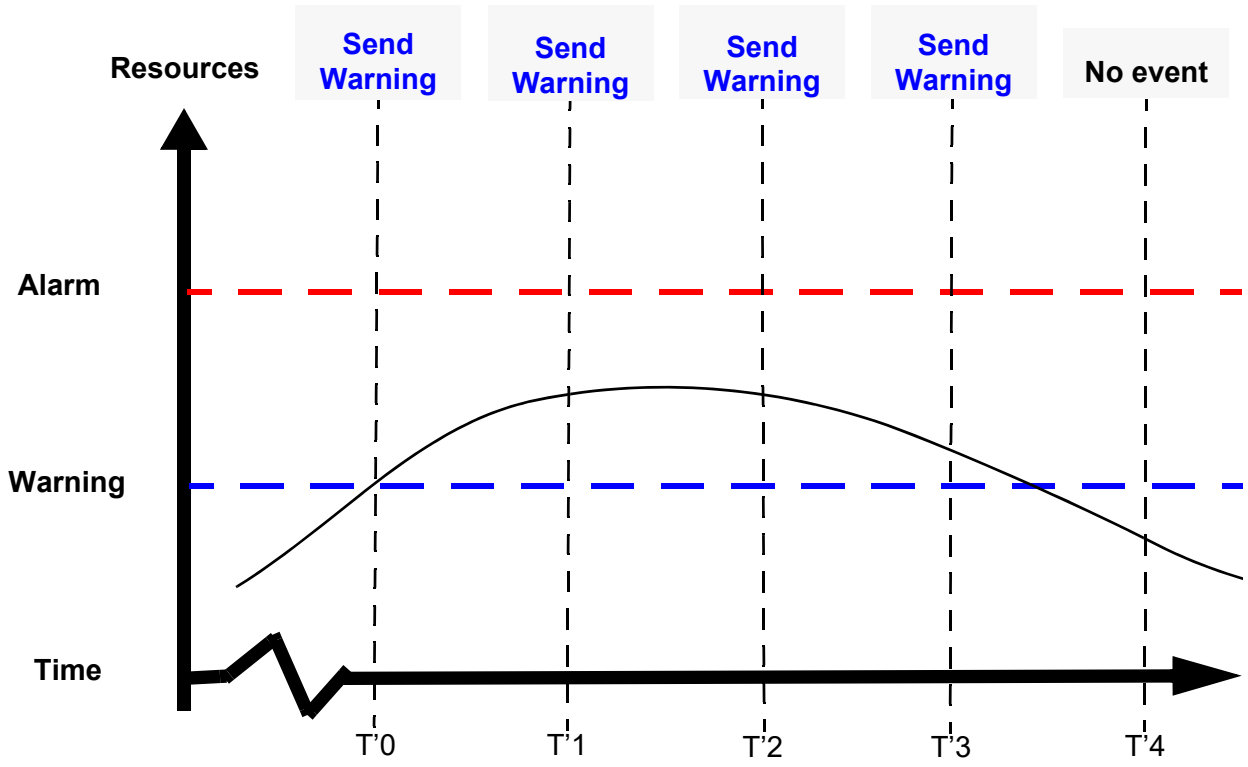

Figure L.2 - Example of Congestion Signal Generation

T'0 – Congestion Signal generation restarts: The next Congestion Signal generation interval starts after the previous interval ends as indicated by no Congestion Signal transmission at Signal Frequency interval T4. Congestion Signal generation restarts when the transmitter resource consumption subsequently exceeds the Warning threshold then the transmitter sends the Warning Congestion Signal. The time between Congestion Signal generation intervals is greater than the Signal Frequency interval (I.e., the interval from T4 to T'0 is greater than the Signal Frequency).

T'1 to T'3 – Warning threshold persists: While the transmitter resource consumption is above the Warning threshold and is below the Alarm threshold then the transmitter sends the Warning Congestion Signal at the Signal Frequency intervals.

T'4 – Congestion Signal generations ends: When the next Signal Frequency interval occurs and the transmitter resource consumption is below the Warning threshold then the transmitter stops sending any Congestion Signals.

L.4.3 Resource Consumption Modeling

The graphs in figure L.3 and figure L.4 describe an example of congestion monitoring over time. That graph is a pictorial description of congestion monitoring used to model transmitter resource consumption and the resulting Congestion Signal generation. This example depicts the results of an algorithm for resource consumption modeling and Congestion Signal generation. Other algorithms may produce different Congestion Signal generation results.

The x-axis is time, the y-axis is bandwidth, and the line is the bandwidth consumption over time as measured by an implementation (E.g., a point on the line is the transmitter's measured bandwidth consumption for a port). The dotted horizontal lines represent the relative Warning and Alarm thresholds as compared to the transmitter's bandwidth consumption. The green dotted vertical lines represent the monitoring intervals and the black dotted lines represent the Signal Frequency intervals and are labeled with the corresponding Signal generation value.

In figure L.3 and figure L.4, congestion is monitored using a polling method that measures the bandwidth consumption of a port over a period. The rules for this algorithm are:

a) If bandwidth consumption is measured to be above 70% utilization and below 90% utilization then the transmitter resource consumption is above the Warning threshold;
b) If bandwidth consumption is measured to be above 90% utilization then the transmitter resource consumption is above the Alarm threshold; and
c) If the transmitter resource consumption is above a threshold for half of the monitoring period then a Congestion Signal is generated.

The algorithm uses four polling cycles during the monitoring period prior to a potential Signal Frequency interval to determine if the transmitter resource consumption is above a threshold and if a Congestion Signal is generated.

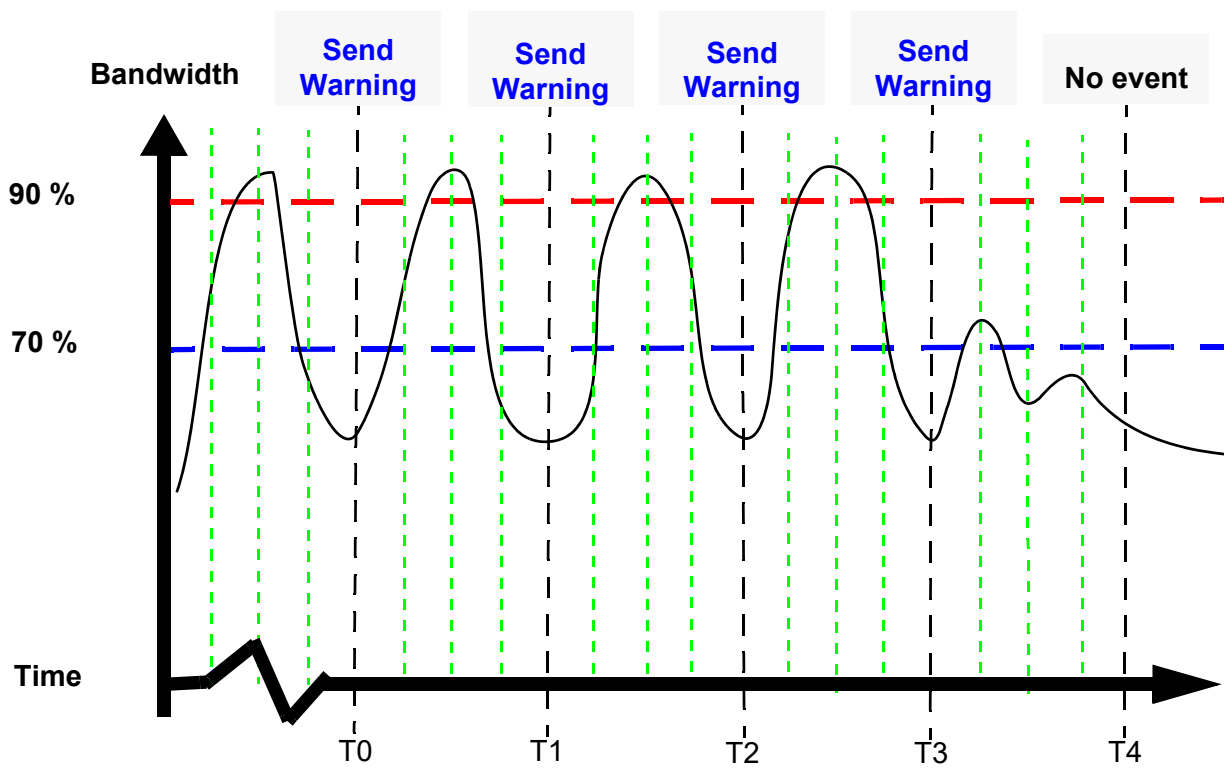

Figure L.3 - Example of Congestion Monitoring based on Bandwidth

The signal generation for this example is depicted as follows:

T0 – Congestion Signal generation starts: The congestion monitoring method concludes that the bandwidth utilization is above 70% for at least 50% of the monitoring period. This condition indicates the transmitter resource consumption exceeds the Warning threshold and causes the transmitter to send the Warning Congestion Signal.

T1 to T3 – Warning threshold persists: The congestion monitoring method identifies that the bandwidth utilization is above 70% for at least 50% of the monitoring period and the bandwidth utilization is below 90% for less than 50% of the monitoring period. While this condition continues to indicate the transmitter resource consumption exceeds the Warning threshold, but is below the Alarm threshold, then the transmitter sends the Warning Congestion Signal at the Signal Frequency intervals.

T4 – Congestion Signal generation ends: The congestion monitoring method determines the bandwidth utilization is below 70% for at least 50% of the monitoring period. This condition indicates the transmitter resource consumption is below the Warning threshold and causes the transmitter to stop sending any Congestion Signals.

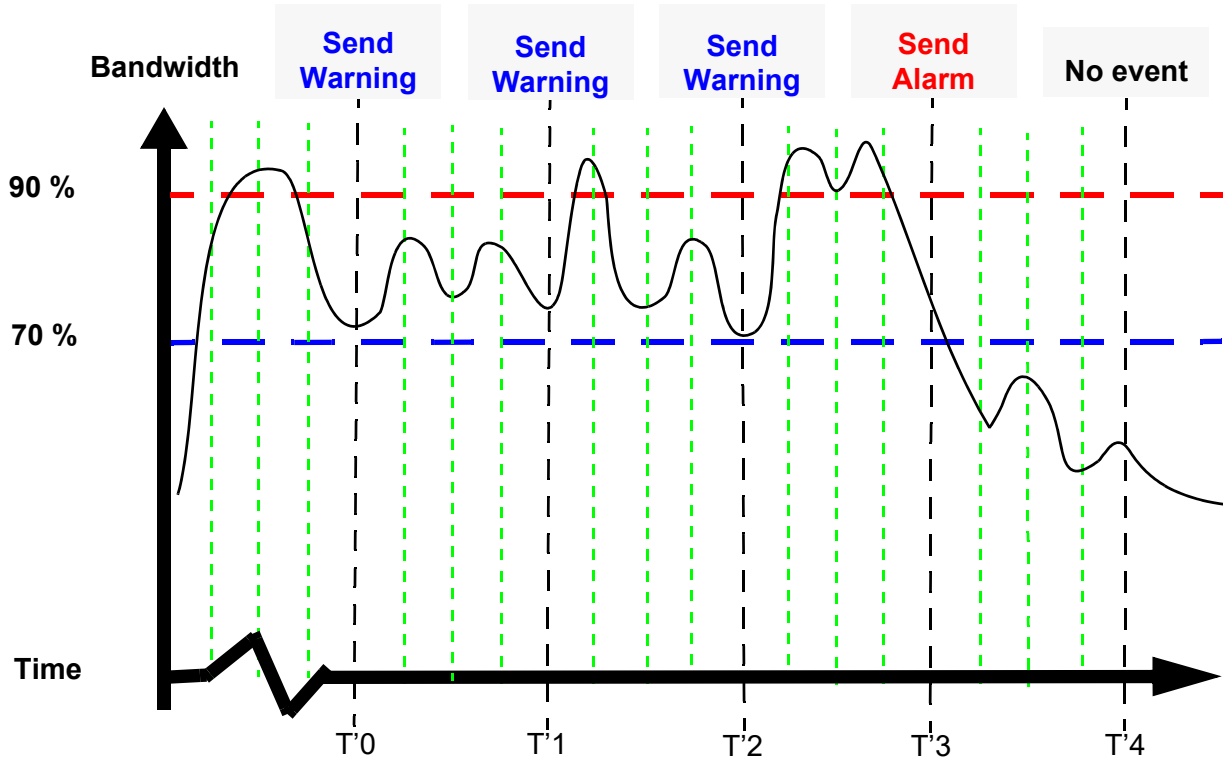

Figure L.4 - Example of Congestion Monitoring based on Bandwidth

T'0 – Congestion Signal generation restarts: The next Congestion Signal generation interval starts after the previous interval ends as indicated by no Congestion Signal transmission at Signal Frequency interval T4. The congestion monitoring method continues to monitor bandwidth utilization and Congestion Signal generation restarts when the bandwidth utilization is above 70% for at least 50% of the monitoring period.

This condition indicates the transmitter resource consumption subsequently exceeds the Warning threshold and the transmitter sends the Warning Congestion Signal. The time between Congestion Signal generation intervals is greater than the Signal Frequency interval (I.e., the interval from T4 to T'0 is greater than the Signal Frequency).

T'1 to T'2 – Warning threshold persists: The congestion monitoring method identifies that the bandwidth utilization is above 70% for at least 50% of the monitoring period and the bandwidth utilization is below 90% for less than 50% of the monitoring period. While this condition continues to indicate the transmitter resource consumption exceeds the Warning threshold, but is below the Alarm threshold, then the transmitter sends the Warning Congestion Signal at the Signal Frequency intervals.

T'3 – Alarm threshold exceeded: The congestion monitoring method identifies that the bandwidth utilization is above 90% for at least 50% of the monitoring period. This condition indicates the transmitter resource consumption exceeds the Alarm threshold and causes the transmitter to send the Alarm Congestion Signal.

T'4 – Congestion Signal generations ends: The congestion monitoring method determines the bandwidth utilization is below 70% for at least 50% of the monitoring period. This condition indicates the transmitter resource consumption is below the Warning threshold and causes the transmitter to stop sending any Congestion Signals.

Annex M
(Informative)
Bibliography

1) Lin, Shu and Daniel J. Costello, Error Control Coding, Prentice Hall; 2nd edition, April 1, 2004.

2) IEEE Identifier Guidelines, "*Guidelines for Use of Extended Unique Identifier (EUI), Organizationally Unique Identifier (OUI), and Company_ID (CID)*", https://standards.ieee.org/content/dam/ieee-standards/standards/web/documents/tutorials/eui.pdf.